Extract from the online catalog

SMKDS 2,5/ 3-5,08

Order No.: 1705472



http://eshop.phoenixcontact.de/phoenix/treeViewClick.do?UID=1705472

PC terminal block, Nominal current: 20 A, Nom. voltage: 250 V, Pitch: 5.08 mm, Number of positions: 3, Type of connection: Screw connection, Mounting: Soldering, Conductor/PCB connection direction: 40 °, Color: green, The article can be aligned to create different nos. of positions!

Commercial data

GTIN (EAN)	4 017918 144494
sales group	E017
Pack	50 pcs.
Customs tariff	85369010
Catalog page information	Page 71 (CC-2009)

Product notes

WEEE/RoHS-compliant since: 01/01/2003

http://www.download.phoenixcontact.com
Please note that the data given here has been taken from the online catalog. For comprehensive information and data, please refer to the user documentation. The General Terms and Conditions of Use apply to Internet downloads.

Technical data

Dimensions / positions

Length	14.25 mm
Pitch	5.08 mm

Dimension a	10.16 mm
Number of positions	3
Pin dimensions	1 x 0,9 mm
Hole diameter	1.4 mm
Screw thread	M3
Tightening torque, min	0.5 Nm
Tightening torque max	0.6 Nm

Technical data

Range of articles	SMKDS 2,5
Insulating material group	I
Rated surge voltage (III/3)	4 kV
Rated surge voltage (III/2)	4 kV
Rated surge voltage (II/2)	4 kV
Rated voltage (III/3)	250 V
Rated voltage (III/2)	400 V
Rated voltage (II/2)	630 V
Connection in acc. with standard	EN-VDE
Nominal current I_N	20 A
Nominal cross section	2.5 mm²
Maximum load current	20 A
Insulating material	PA
Inflammability class acc. to UL 94	V0
Internal cylindrical gage	A3
Stripping length	11 mm
Nominal voltage, UL/CUL Use Group B	250 V
Nominal current, UL/CUL Use Group B	10 A
Nominal voltage, UL/CUL Use Group D	300 V
Nominal current, UL/CUL Use Group D	10 A

Connection data

Conductor cross section solid min.	0.14 mm²
Conductor cross section solid max.	2.5 mm²
Conductor cross section stranded min.	0.14 mm²
Conductor cross section stranded max.	2.5 mm²
Conductor cross section stranded, with ferrule without plastic sleeve min.	0.25 mm²

Conductor cross section stranded, with ferrule without plastic sleeve max.	2.5 mm²
Conductor cross section stranded, with ferrule with plastic sleeve min.	0.25 mm²
Conductor cross section stranded, with ferrule with plastic sleeve max.	2.5 mm²
Conductor cross section AWG/kcmil min.	26
Conductor cross section AWG/kcmil max	14
2 conductors with same cross section, solid min.	0.14 mm²
2 conductors with same cross section, solid max.	0.75 mm²
2 conductors with same cross section, stranded min.	0.14 mm²
2 conductors with same cross section, stranded max.	0.75 mm²
2 conductors with same cross section, stranded, ferrules without plastic sleeve, min.	0.25 mm²
2 conductors with same cross section, stranded, ferrules without plastic sleeve, max.	0.75 mm²
2 conductors with same cross section, stranded, TWIN ferrules with plastic sleeve, min.	0.5 mm²
2 conductors with same cross section, stranded, TWIN ferrules with plastic sleeve, max.	1.5 mm²
Minimum AWG according to UL/CUL	30
Maximum AWG according to UL/CUL	12

Certificates / Approvals

Certification	CB, CCA, CSA, CUL, GOST, SEV, UL

Accessories

Item	Designation	Description
Bridges		
1733172	EBP 3- 5	Insertion bridge, fully insulated, for plug connectors with 5.0 or 5.08 mm pitch, no. of positions: 3

Marking

1051993	B-STIFT	Marker pen, for manual labeling of unprinted Zack strips, smear-proof and waterproof, line thickness 0.5 mm
0804293	SK 5,08/3,8:FORTL.ZAHLEN	Marker card, printed horizontally, self-adhesive, 12 identical decades marked 1-10, 11-20 etc. up to 91-(99)100, sufficient for 120 terminal blocks
0805085	SK 5,08/3,8:SO	Marker card, special printing, self-adhesive, labeled acc. to customer requirements, 12 identical marker strips per card, max. 25-position labeling per strip, color: white
0805412	SK 5,08/3,8:UNBEDRUCKT	Marker cards, unprinted, with pitch divisions, self-adhesive, 10-section marker strips, 12 strips per card, can be labeled with the M-PEN

Tools

1205053	SZS 0,6X3,5	Actuation tool, for ST terminal blocks, insulated, also suitable for use as a bladed screwdriver, size: 0.6 x 3.5 x 100 mm, 2-component grip, with non-slip grip

Diagrams/Drawings

Drilling plan/solder pad geometry

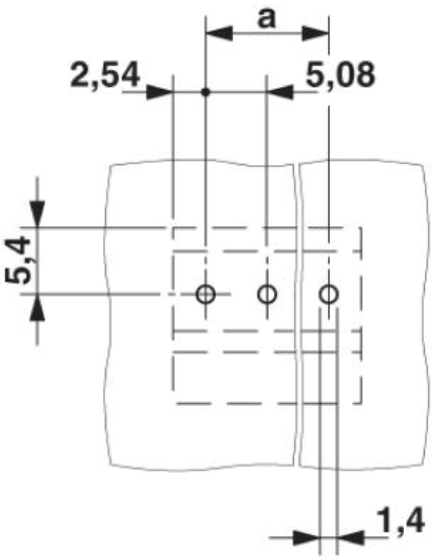

Dimensioned drawing

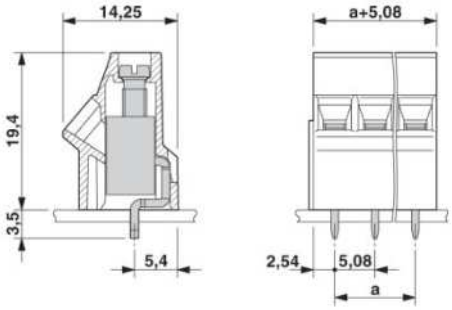

Address

PHOENIX CONTACT Inc., USA
586 Fulling Mill Road
Middletown, PA 17057,USA
Phone (800) 888-7388
Fax (717) 944-1625
http://www.phoenixcon.com



© 2010 Phoenix Contact
Technical modifications reserved;