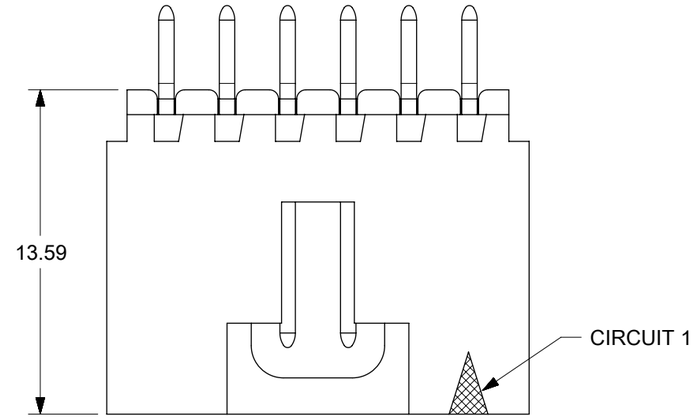

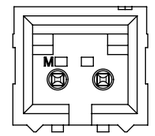

2 CIRCUIT PART

NOTES:

1. HOUSING MATERIAL: LCP, UL94V-0, BLACK
   TERMINAL MATERIAL: BRASS
2. FINISH:
   MATTE TIN = OVERALL MATTE TIN: 2.54 MICROMETERS MIN OVER NICKEL.
   0.38 GOLD = SELECT GOLD IN CONTACT AREA: 0.38 MICROMETER MIN
   SELECT MATTE TIN IN PC TAIL: 2.0 MICROMETERS MIN
   WITH OVERALL NICKEL UNDERPLATE
   0.75 GOLD = SELECT GOLD IN CONTACT AREA: 0.75 MICROMETER MIN
   SELECT MATTE TIN IN PC TAIL: 2.0 MICROMETERS MIN
   WITH OVERALL NICKEL UNDERPLATE
3. PRODUCT SPECIFICATION: 1719710000-PS AND PS-70400
4. PACKAGING SPECIFICATION: TUBES PER 1719760000-PK
5. HEADER MATES WITH: OPTION "G" 70400 AND 70430 SERIES
   SL CONNECTORS
6. COSMETIC SPECIFICATION: PS-45499-002 CLASS B
7. SOLDERABILITY PER SMES-152 LEAD FREE ALLOY

CKTS	A	B
2	7.54	2.54
3	10.08	5.08
4	12.62	7.62
5	15.16	10.16
6	17.70	12.70
7	20.24	15.24
8	22.78	17.78
9	25.32	20.32
10	27.86	22.86
11	30.40	25.40
12	32.94	27.94
13	35.48	30.48
14	38.02	33.02
15	40.56	35.56
16	43.10	38.10
17	45.64	40.64
18	48.18	43.18
19	50.72	45.72
20	53.26	48.26
21	55.80	50.80
22	58.34	53.34
23	60.88	55.88
24	63.42	58.42
25	65.96	60.96

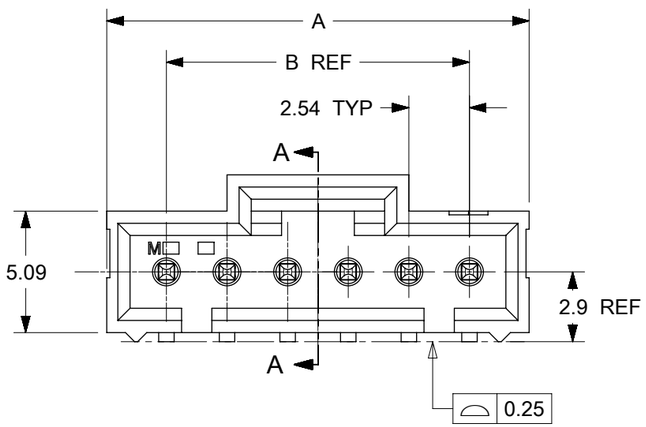

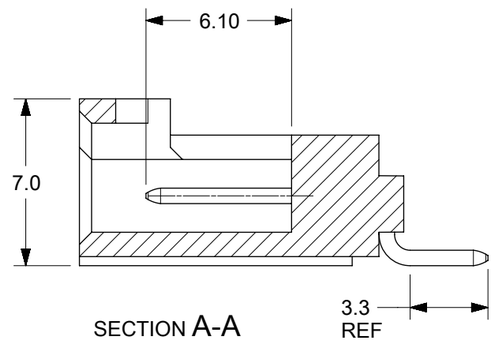

SECTION A-A

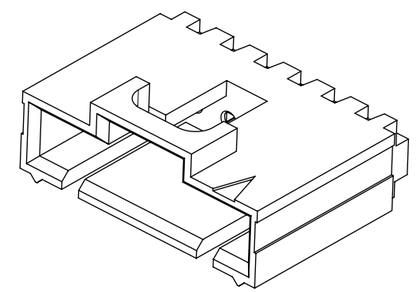

6 CKT PART SHOWN SEE
SEE 2 FOR OTHER OPTIONS

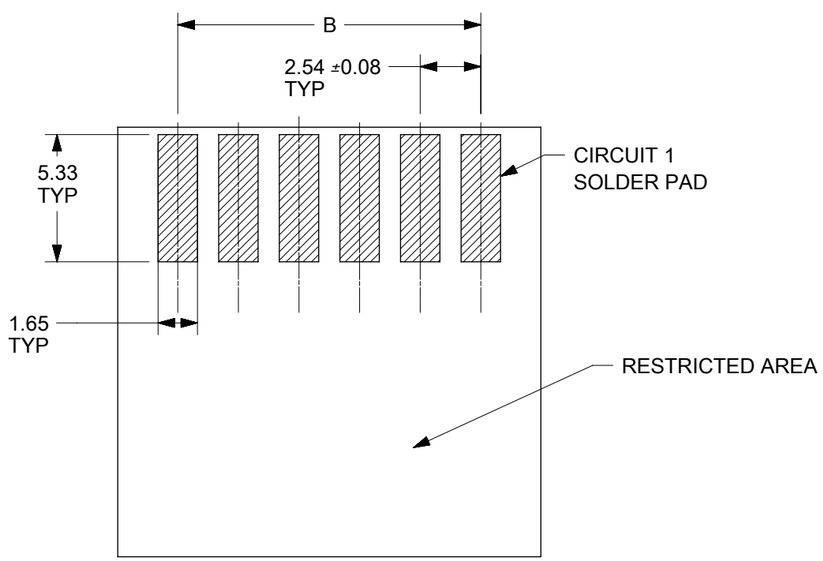

PCB LAYOUT: COMPONENT SIDE
RECOMMENDED PCB THICKNESS: NA

SYMBOLS	
E = 0	
E = 0	
E = 0	
S = 0	
▼ = 0	
C = 0	
☒ = 0	
■ = 0	
V = 0	

THIS DRAWING CONTAINS INFORMATION THAT IS PROPRIETARY TO MOLEX ELECTRONIC TECHNOLOGIES, LLC AND SHOULD NOT BE USED WITHOUT WRITTEN PERMISSION

DIMENSION UNITS	SCALE
mm	5:1

GENERAL TOLERANCES (UNLESS SPECIFIED)

ANGULAR TOL	±	0.5 °
4 PLACES	±	
3 PLACES	±	
2 PLACES	±	0.25
1 PLACE	±	0.38
0 PLACES	±	0.0

DRAFT WHERE APPLICABLE MUST REMAIN WITHIN DIMENSIONS

CURRENT REV DESC: REV PER QUAL

EC NO: 174682
DRWN: KSAMIEC 2018/04/04
CHK'D: MKIPPER 2018/04/09
APPR: FSMITH 2018/04/11

INITIAL REVISION:
DRWN: KSAMIEC 2016/09/01
APPR: FSMITH 2016/10/20

THIRD ANGLE PROJECTION | DRAWING: B-SIZE | SERIES: 171976

molex

SL RTAN HEADER ASSY SMT NO PEGS

PRODUCT CUSTOMER DRAWING

DOCUMENT NUMBER	DOC TYPE	DOC PART	REVISION
1719760000-SD	PSD	000	B1

MATERIAL NUMBER	CUSTOMER	SHEET NUMBER
SEE CHART	GENERAL MARKET	1 OF 2

DOCUMENT STATUS	P1	RELEASE DATE	2018/04/11 17:48:21

FORMAT: master-tb-portrait
REVISION: H
DATE: 2018/01/18

CIRCUIT SIZE	MATTE TIN MATERIAL NUMBER	0.38 GOLD MATERIAL NUMBER	0.75 GOLD MATERIAL NUMBER
2	171976-0002	171976-0102	171976-0202
3	171976-0003	171976-0103	171976-0203
4	171976-0004	171976-0104	171976-0204
5	171976-0005	171976-0105	171976-0205
6	171976-0006	171976-0106	171976-0206
7	171976-0007	171976-0107	171976-0207
8	171976-0008	171976-0108	171976-0208
9	171976-0009	171976-0109	171976-0209
10	171976-0010	171976-0110	171976-0210
11	171976-0011	171976-0111	171976-0211
12	171976-0012	171976-0112	171976-0212
13	171976-0013	171976-0113	171976-0213
14	171976-0014	171976-0114	171976-0214
15	171976-0015	171976-0115	171976-0215
16	171976-0016	171976-0116	171976-0216
17	171976-0017	171976-0117	171976-0217
18	171976-0018	171976-0118	171976-0218
19	171976-0019	171976-0119	171976-0219
20	171976-0020	171976-0120	171976-0220
21	171976-0021	171976-0121	171976-0221
22	171976-0022	171976-0122	171976-0222
23	171976-0023	171976-0123	171976-0223
24	171976-0024	171976-0124	171976-0224
25	171976-0025	171976-0125	171976-0225

THIS DRAWING CONTAINS INFORMATION THAT IS PROPRIETARY TO MOLEX ELECTRONIC TECHNOLOGIES, LLC AND SHOULD NOT BE USED WITHOUT WRITTEN PERMISSION

SYMBOLS: E5 = 0; E6 = 0; E8 = 0; S = 0; ▼ = 0; C = 0; ☒ = 0; ■ = 0; ▽ = 0

DIMENSION UNITS	SCALE
mm	1:1

GENERAL TOLERANCES (UNLESS SPECIFIED)

ANGULAR TOL	±	0.5 °
4 PLACES	±	
3 PLACES	±	
2 PLACES	±	0.25
1 PLACE	±	0.38
0 PLACES	±	0.0

DRAFT WHERE APPLICABLE MUST REMAIN WITHIN DIMENSIONS

CURRENT REV DESC: REV PER QUAL

EC NO: 174682
DRWN: KSAMIEC 2018/04/04
CHK'D: MKIPPER 2018/04/09
APPR: FSMITH 2018/04/11

INITIAL REVISION:
DRWN: KSAMIEC 2016/09/01
APPR: FSMITH 2016/10/20

THIRD ANGLE PROJECTION | DRAWING: B-SIZE | SERIES: 171976

molex

SL RTAN HEADER ASSY SMT NO PEGS

PRODUCT CUSTOMER DRAWING

DOCUMENT NUMBER	DOC TYPE	DOC PART	REVISION
1719760000-SD	PSD	000	B1

MATERIAL NUMBER	CUSTOMER	SHEET NUMBER
SEE CHART	GENERAL MARKET	2 OF 2

DOCUMENT STATUS	P1	RELEASE DATE	2018/04/11 17:48:21

FORMAT: master-tb-psd.dwt
REVISION: H
DATE: 2018/01/18