WIRE GAUGE		PART NUMBER	PLATING OPTION	LUBED	DIM "A"
NORMAL CRIMP	DOUBLE CRIMP				
10AWG	N/A	76823-0345	HOT DIP TIN PREPLATE-OVERALL 1.0µm(40µ") MIN	YES	14.00
12AWG	2x16AWG	76823-0343			13.00
14/16AWG	2x18AWG OR 2x20AWG	76823-0344			
10AWG	N/A	172063-0335	15u" GOLD 0.38µm(15µ") GOLD CONTACT AREA,1.5µm(60µ")-2.5µm(100µ") MATTE TIN, OVER 1.25µm(50µ")-2.5µm(100µ") NICKEL OVERALL	YES	14.00
12AWG	2x16AWG	172063-0333			13.00
14/16AWG	2x18AWG OR 2x20AWG	172063-0334			
10AWG	N/A	172063-1335	30u" GOLD 0.76µm(30µ") GOLD CONTACT AREA,1.5µm(60µ")-2.5µm(100µ") MATTE TIN, OVER 1.25µm(50µ")-2.5µm(100µ") NICKEL OVERALL	YES	14.00
12AWG	2x16AWG	172063-1333			13.00
14/16AWG	2x18AWG OR 2x20AWG	172063-1334			

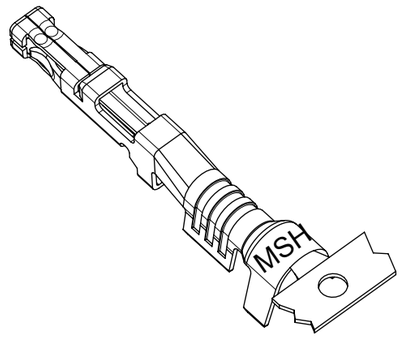

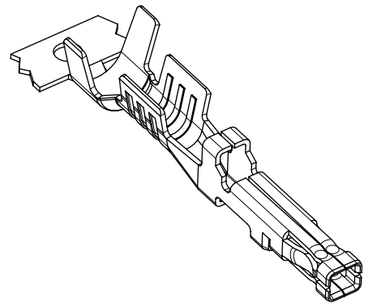

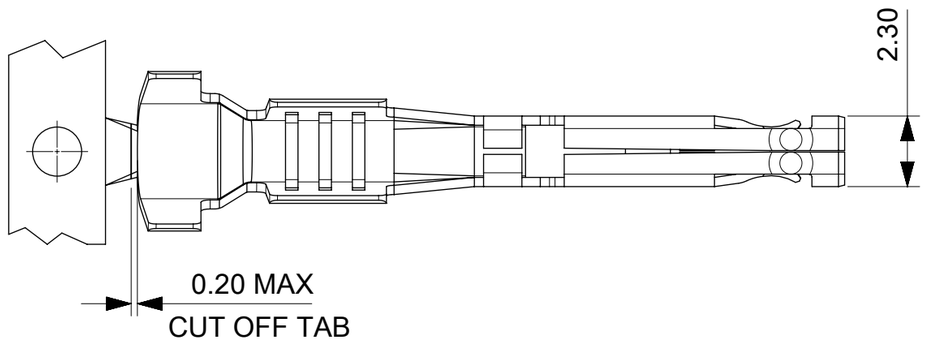

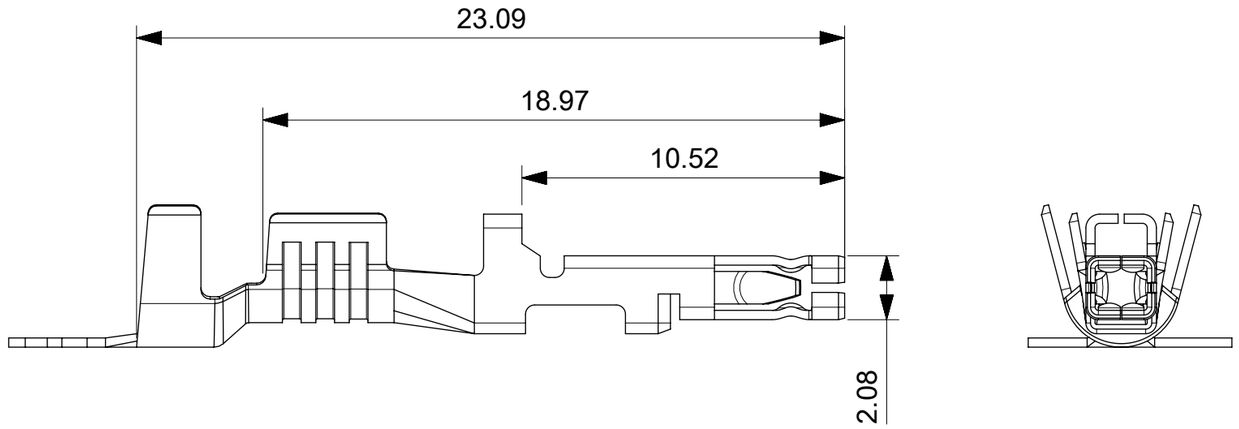

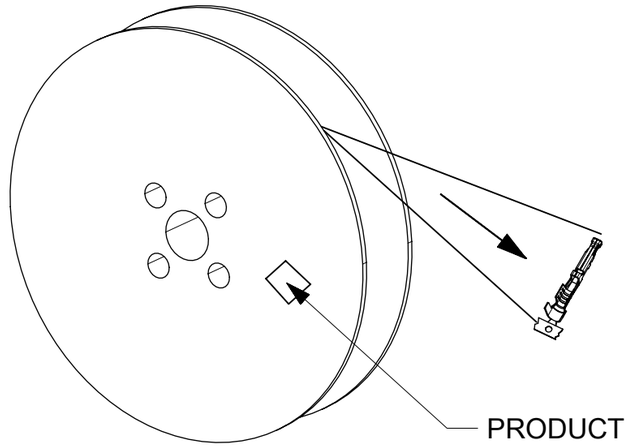

FINISH PART UNWIND DIRECTION

NOTES:
1. MATERIAL: HIGH CONDUCTIVITY COPPER ALLOY.
2. FINISH: SEE CHART.
3. PRODUCT SPECIFICATION: 1720631000-PS/1054171000-PS.
4. PACKAGING SPECIFICATION: REEL PER 768230200
5. TERMINAL USED WITH MOLEX SERIES RECEPTACLE:17169202XX/200456
6. APPLICATION SPECIFICATION: 768232000-AS

THIS DRAWING CONTAINS INFORMATION THAT IS PROPRIETARY TO MOLEX ELECTRONIC TECHNOLOGIES, LLC AND SHOULD NOT BE USED WITHOUT WRITTEN PERMISSION

DIMENSION UNITS	SCALE
mm	NTS

GENERAL TOLERANCES (UNLESS SPECIFIED)

ANGULAR TOL	± 3.0 °
4 PLACES	±
3 PLACES	±
2 PLACES	± 0.25
1 PLACE	± 0.35
0 PLACES	±

DRAFT WHERE APPLICABLE MUST REMAIN WITHIN DIMENSIONS

CURRENT REV DESC:

EC NO: 722781
DRWN: WYATTH5 2022/10/20
CHK'D: XQZHANG 2022/10/27
APPR: XQZHANG 2022/10/27

INITIAL REVISION:
DRWN: YXZHENG 2016/12/15
APPR: YXZHENG 2018/08/06

THIRD ANGLE PROJECTION | DRAWING: A3-SIZE | SERIES: 76823

molex

MEGA-FIT FEMALE TERMINAL FOR 14/16, 12AWG, AND 10AWG WIRE

PRODUCT CUSTOMER DRAWING

DOCUMENT NUMBER	DOC TYPE	DOC PART	REVISION
768230200	PSD	000	C3

MATERIAL NUMBER	CUSTOMER	SHEET NUMBER
SEE TABLE	GENERAL MARKET	1 OF 3

DOCUMENT STATUS	P1	RELEASE DATE	2022/10/27 06:33:10

FORMAT: master-tb-prod-A3
REVISION: J1
DATE: 2021/05/01

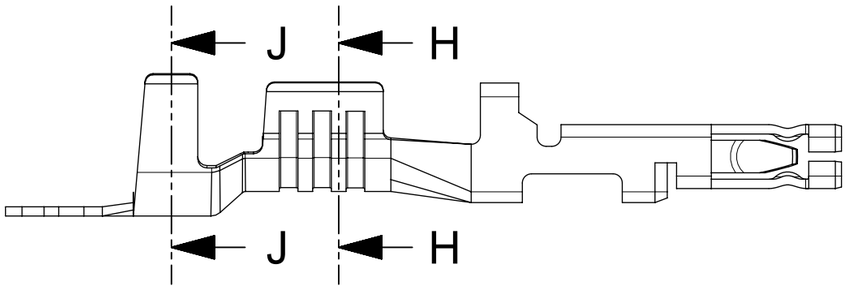

14/16AWG WIRE STYLES

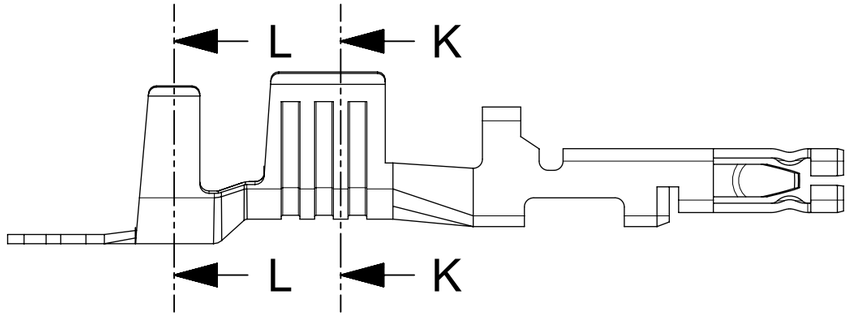

12 AWG WIRE STYLES

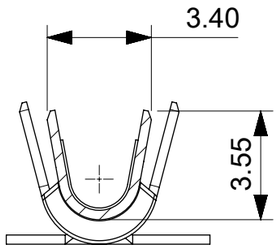

SECTION H-H

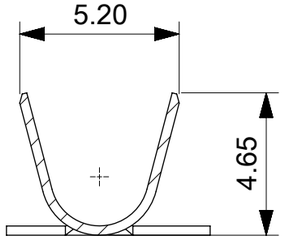

SECTION J-J

CONDUCTOR AND INSULATION 14/16AWG

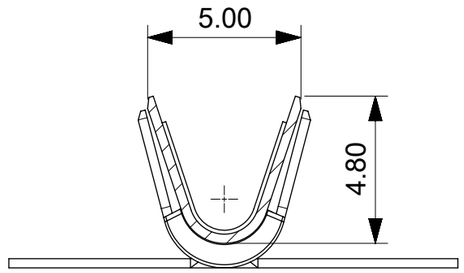

SECTION K-K

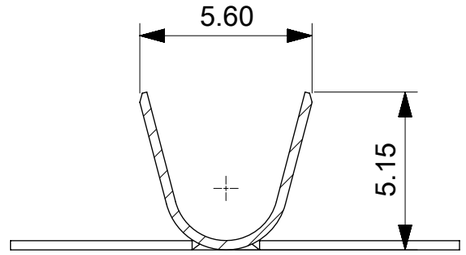

SECTION L-L

CONDUCTOR AND INSULATION 12AWG

THIS DRAWING CONTAINS INFORMATION THAT IS PROPRIETARY TO MOLEX ELECTRONIC TECHNOLOGIES, LLC AND SHOULD NOT BE USED WITHOUT WRITTEN PERMISSION

DIMENSION UNITS	SCALE
mm	NTS

GENERAL TOLERANCES (UNLESS SPECIFIED)

ANGULAR TOL	±	3.0 °
4 PLACES	±	
3 PLACES	±	
2 PLACES	±	0.25
1 PLACE	±	0.35
0 PLACES	±	

DRAFT WHERE APPLICABLE MUST REMAIN WITHIN DIMENSIONS

CURRENT REV DESC:

EC NO: 722781
DRWN: WYATTH5 2022/10/20
CHK'D: XQZHANG 2022/10/27
APPR: XQZHANG 2022/10/27

INITIAL REVISION:
DRWN: YXZHENG 2016/12/15
APPR: YXZHENG 2018/08/06

THIRD ANGLE PROJECTION | DRAWING: A3-SIZE | SERIES: 76823

molex

MEGA-FIT FEMALE TERMINAL FOR 14/16, 12AWG, AND 10AWG WIRE

PRODUCT CUSTOMER DRAWING

DOCUMENT NUMBER	DOC TYPE	DOC PART	REVISION
768230200	PSD	000	C3

MATERIAL NUMBER	CUSTOMER	SHEET NUMBER
SEE TABLE	GENERAL MARKET	2 OF 3

DOCUMENT STATUS	P1	RELEASE DATE	2022/10/27 06:33:10

FORMAT: master-tb-prod-A3
REVISION: J1
DATE: 2021/05/01

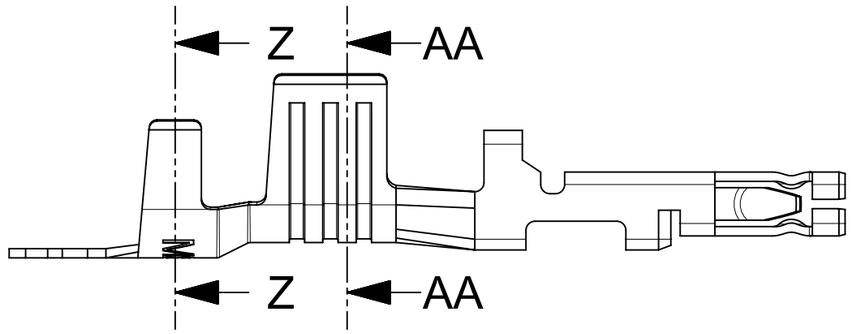

10AWG WIRE STYLES

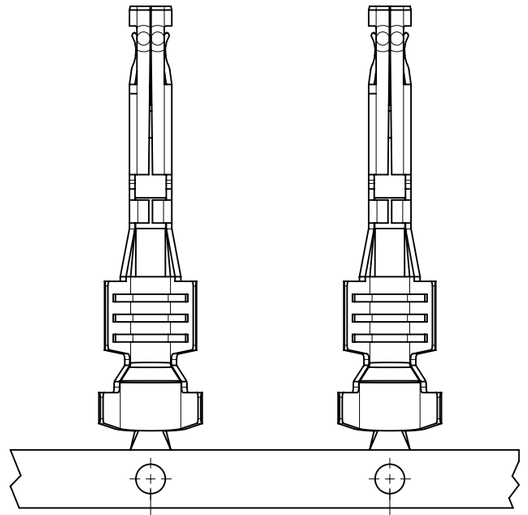

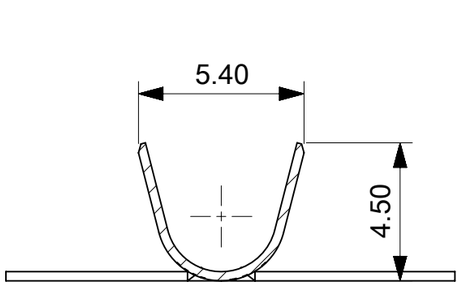

SECTION Z-Z

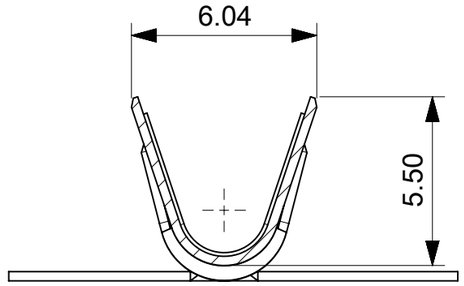

SECTION AA-AA

CONDUCTOR AND INSULATION 10AWG

THIS DRAWING CONTAINS INFORMATION THAT IS PROPRIETARY TO MOLEX ELECTRONIC TECHNOLOGIES, LLC AND SHOULD NOT BE USED WITHOUT WRITTEN PERMISSION

DIMENSION UNITS	SCALE
mm	NTS

GENERAL TOLERANCES (UNLESS SPECIFIED)	
ANGULAR TOL	± 3.0 °
4 PLACES	±
3 PLACES	±
2 PLACES	± 0.25
1 PLACE	± 0.35
0 PLACES	±

DRAFT WHERE APPLICABLE MUST REMAIN WITHIN DIMENSIONS

CURRENT REV DESC:

EC NO: 722781
DRWN: WYATTH5 2022/10/20
CHK'D: XQZHANG 2022/10/27
APPR: XQZHANG 2022/10/27

INITIAL REVISION:
DRWN: YXZHENG 2016/12/15
APPR: YXZHENG 2018/08/06

molex

MEGA-FIT FEMALE TERMINAL FOR 14/16, 12AWG, AND 10AWG WIRE

PRODUCT CUSTOMER DRAWING

DOCUMENT NUMBER	DOC TYPE	DOC PART	REVISION
768230200	PSD	000	C3

THIRD ANGLE PROJECTION	DRAWING	SERIES	MATERIAL NUMBER	CUSTOMER	SHEET NUMBER
	A3-SIZE	76823	SEE TABLE	GENERAL MARKET	3 OF 3

DOCUMENT STATUS	P1	RELEASE DATE	2022/10/27 06:33:10

FORMAT: master-tb-prod-A3
REVISION: J1
DATE: 2021/05/01