PART NUMBER	CKTS	DIM A
172708-1002	2	9.60
172708-1004	4	9.60
172708-1006	6	13.80
172708-1008	8	18.00
172708-1010	10	22.20
172708-1012	12	26.40
172708-1014	14	30.60
172708-1016	16	34.80
172708-1018	18	39.00

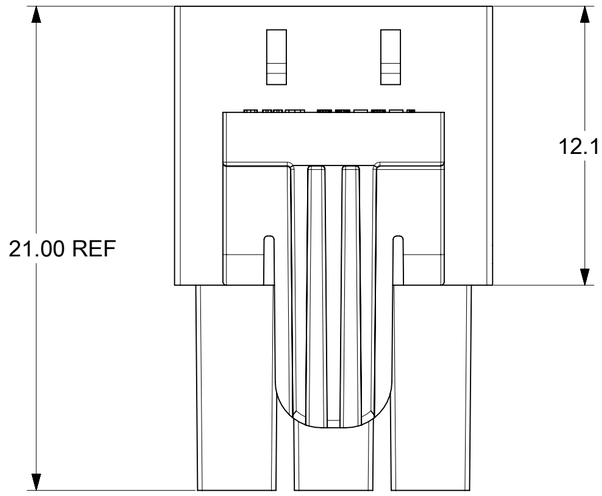

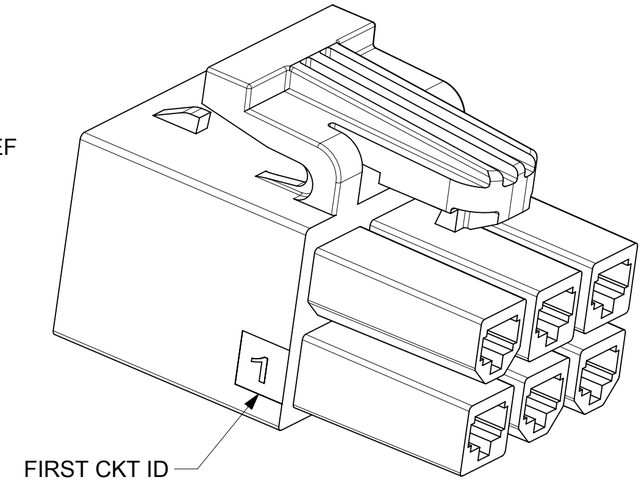

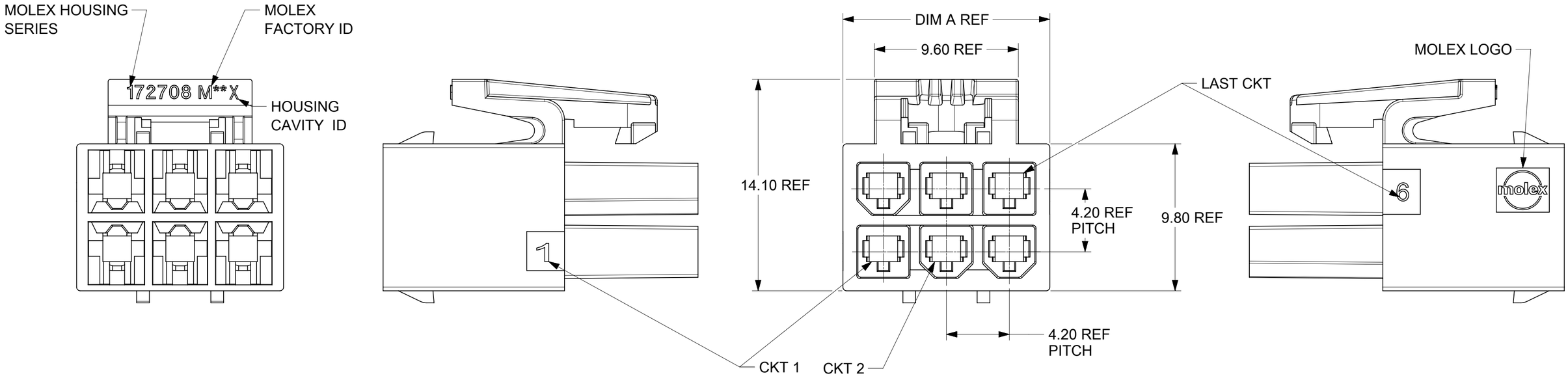

NOTES:

1. MATERIAL:
   NYLON, UL 94V-0 AND GLOW WIRE CAPABLE PER IEC60335-1; COLOR: BLACK
2. FINISH: NONE
3. PRODUCT SPECIFICATION: 2131370000-PS, 2029880002-PS
   APPLICATION SPECIFICATION: 2131370000-AS
4. PACKAGING SPECIFICATION: BULK 1727080002-PK
   REFER TO AS-45499-001 FOR MOISTURIZING NYLON CONNECTOR PARTS.
5. THIS PART TO BE USED WITH MOLEX SERIES.
   FEMALE TERMINAL SERIES: 172718, 202988
   TPA SERIES: 172709-2***.
6. THIS PART MATES WITH MOLEX SERIES.
   PLUG HOUSING SERIES:172762-0***,172762-1***,172767,45776.
   HDR SERIES: 35318,44130,87427,172448,46991,5569,5566,35317,43460,87427,
   172447 AND 46207.
7. THIS PART CONFORMS TO CLASS 'B' REQUIREMENTS OF COSMETIC SPECIFICATION PS-45499-002.

THIS DRAWING CONTAINS INFORMATION THAT IS PROPRIETARY TO MOLEX ELECTRONIC TECHNOLOGIES, LLC AND SHOULD NOT BE USED WITHOUT WRITTEN PERMISSION

DIMENSION UNITS	SCALE
mm	NTS

GENERAL TOLERANCES (UNLESS SPECIFIED)

ANGULAR TOL	± °
4 PLACES	±
3 PLACES	±
2 PLACES	± 0.25
1 PLACE	±
0 PLACES	±

DRAFT WHERE APPLICABLE MUST REMAIN WITHIN DIMENSIONS

CURRENT REV DESC:

EC NO: 793650
DRWN: JERRYW8 2024/07/30
CHK'D: XQZHANG 2024/07/30
APPR: XQZHANG 2024/07/30

INITIAL REVISION:
DRWN: ALUO02 2019/06/20
APPR: AYIN 2019/06/24

molex

SD-DRAWING OF MINI-FIT SIGMA REC HOUSING

PRODUCT CUSTOMER DRAWING

DOCUMENT NUMBER	DOC TYPE	DOC PART	REVISION
1727080002-SD	PSD	000	C7

THIRD ANGLE PROJECTION	DRAWING	SERIES	MATERIAL NUMBER	CUSTOMER	SHEET NUMBER
	C-SIZE	172708	SEE TABLE	GENERAL MARKET	1 OF 4

DOCUMENT STATUS	P1	RELEASE DATE	2024/07/30 08:09:55

FORMAT: master-tb-prod-C
REVISION: J1
DATE: 2021/05/01

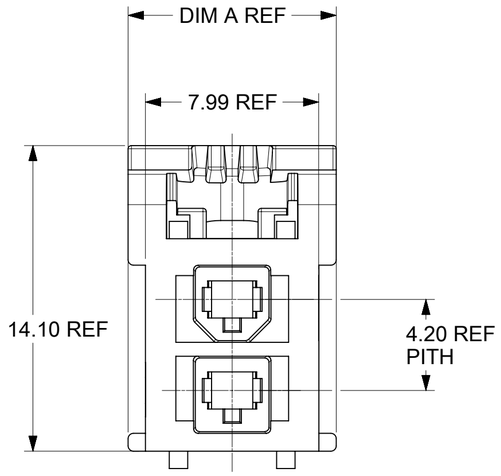

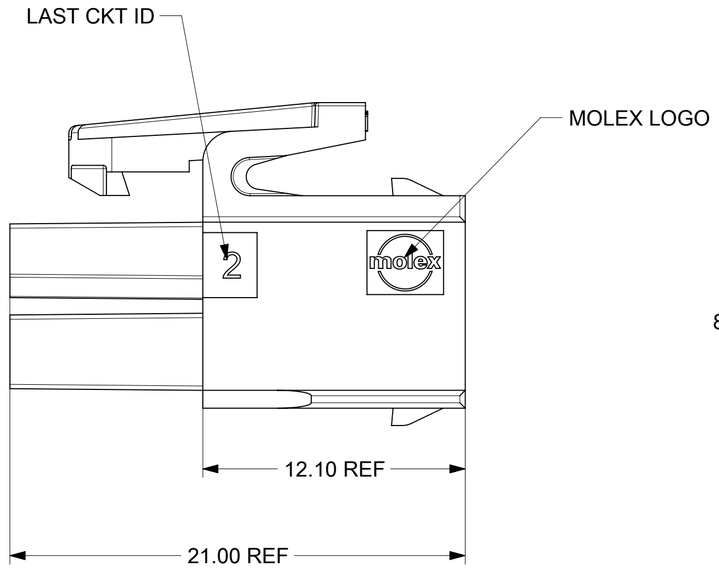

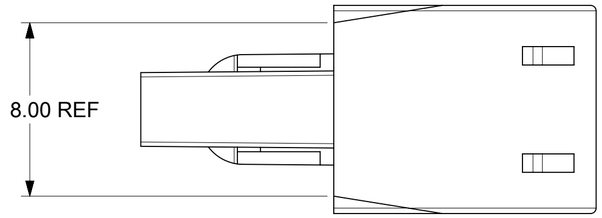

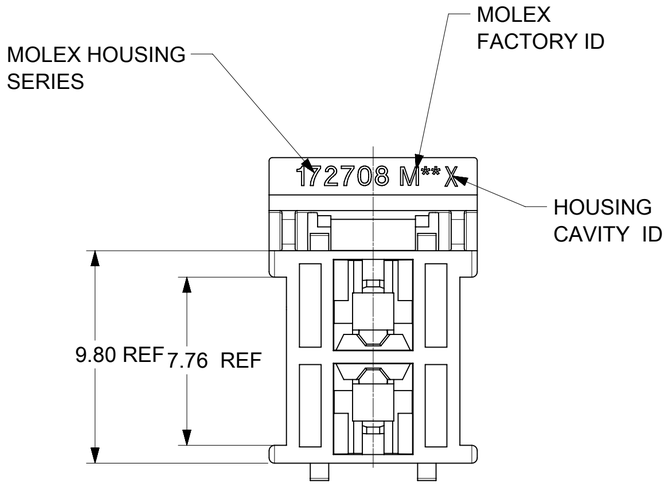

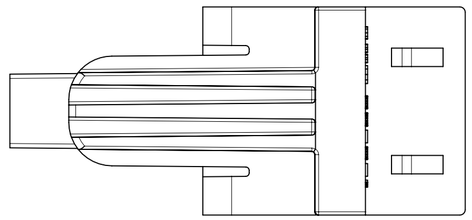

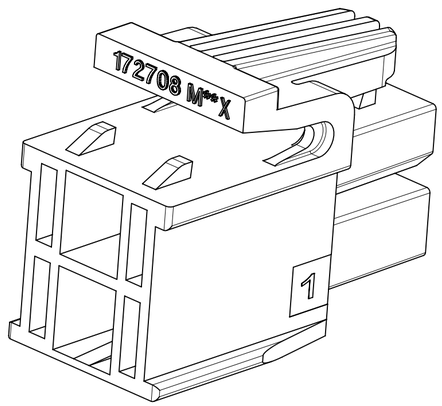

THIS DRAWING CONTAINS INFORMATION THAT IS PROPRIETARY TO MOLEX ELECTRONIC TECHNOLOGIES, LLC AND SHOULD NOT BE USED WITHOUT WRITTEN PERMISSION

DIMENSION UNITS	mm
SCALE	NTS
GENERAL TOLERANCES (UNLESS SPECIFIED)	
ANGULAR TOL	± °
4 PLACES	±
3 PLACES	±
2 PLACES	± 0.25
1 PLACE	±
0 PLACES	±
DRAFT WHERE APPLICABLE MUST REMAIN WITHIN DIMENSIONS	

CURRENT REV DESC:

EC NO: 793650
DRWN: JERRYW8 2024/07/30
CHK'D: XQZHANG 2024/07/30
APPR: XQZHANG 2024/07/30

INITIAL REVISION:
DRWN: ALUO02 2019/06/20
APPR: AYIN 2019/06/24

THIRD ANGLE PROJECTION | DRAWING: A2-SIZE | SERIES: 172708

molex

SD-DRAWING OF MINI-FIT SIGMA REC HOUSING

PRODUCT CUSTOMER DRAWING

DOCUMENT NUMBER	DOC TYPE	DOC PART	REVISION
1727080002-SD	PSD	000	C7

MATERIAL NUMBER	CUSTOMER	SHEET NUMBER
SEE TABLE	GENERAL MARKET	2 OF 4

DOCUMENT STATUS	P1	RELEASE DATE	2024/07/30 08:09:55

FORMAT: master-tb-prod-A2
REVISION: 21
DATE: 2021/05/01

POLARIZATION DETAIL

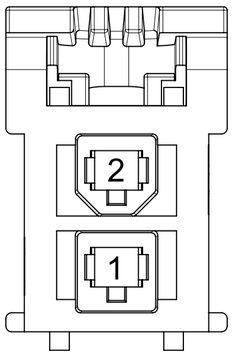

2 CKT

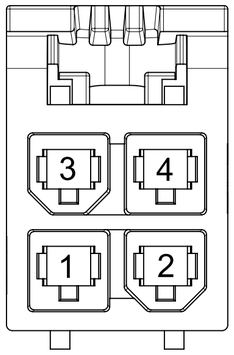

4 CKT

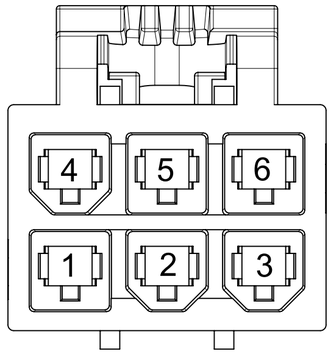

6 CKT

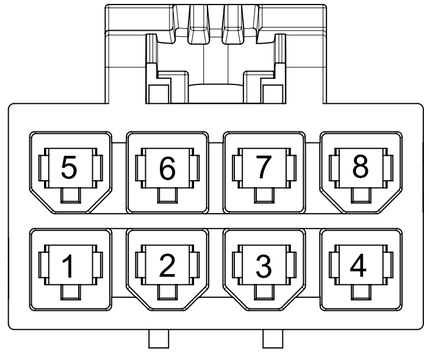

8 CKT

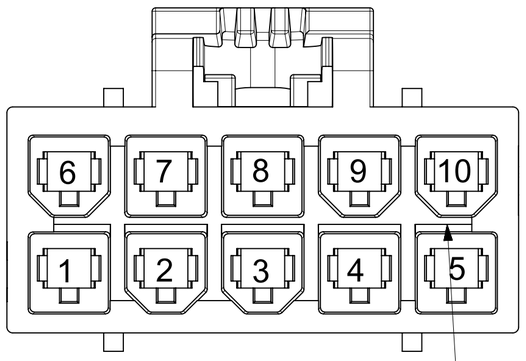

10 CKT

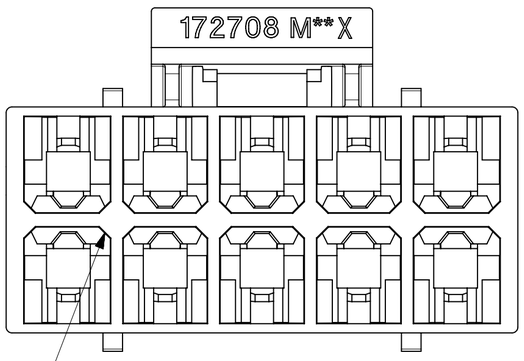

CHAMFER FOR 10-18CKT ONLY

CORE OUT FETURE AT THE BASE OF TOWERS
FOR 10-14 CKTS DIFFERS FROM 2-8CKTS

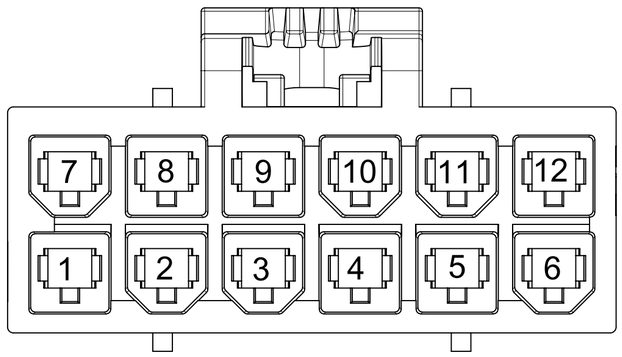

12 CKT

THIS DRAWING CONTAINS INFORMATION THAT IS PROPRIETARY TO MOLEX ELECTRONIC TECHNOLOGIES, LLC AND SHOULD NOT BE USED WITHOUT WRITTEN PERMISSION

DIMENSION UNITS	SCALE
mm	NTS

GENERAL TOLERANCES (UNLESS SPECIFIED)

ANGULAR TOL	±	°
4 PLACES	±	
3 PLACES	±	
2 PLACES	±	0.25
1 PLACE	±	
0 PLACES	±	

DRAFT WHERE APPLICABLE MUST REMAIN WITHIN DIMENSIONS

CURRENT REV DESC:

EC NO: 793650
DRWN: JERRYW8 2024/07/30
CHK'D: XQZHANG 2024/07/30
APPR: XQZHANG 2024/07/30

INITIAL REVISION:
DRWN: ALUO02 2019/06/20
APPR: AYIN 2019/06/24

molex

SD-DRAWING OF MINI-FIT SIGMA REC HOUSING

PRODUCT CUSTOMER DRAWING

DOCUMENT NUMBER	DOC TYPE	DOC PART	REVISION
1727080002-SD	PSD	000	C7

THIRD ANGLE PROJECTION	DRAWING	SERIES	MATERIAL NUMBER	CUSTOMER	SHEET NUMBER
	C-SIZE	172708	SEE TABLE	GENERAL MARKET	3 OF 4

DOCUMENT STATUS	P1	RELEASE DATE	2024/07/30 08:09:55

FORMAT: master-tb-prod-C
REVISION: J1
DATE: 2021/05/01

POLARIZATION DETAIL

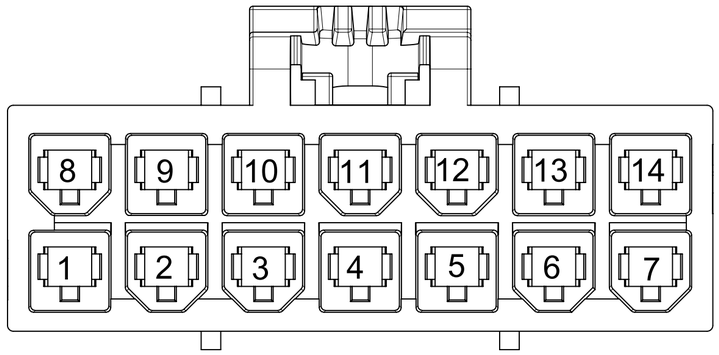

14 CKT

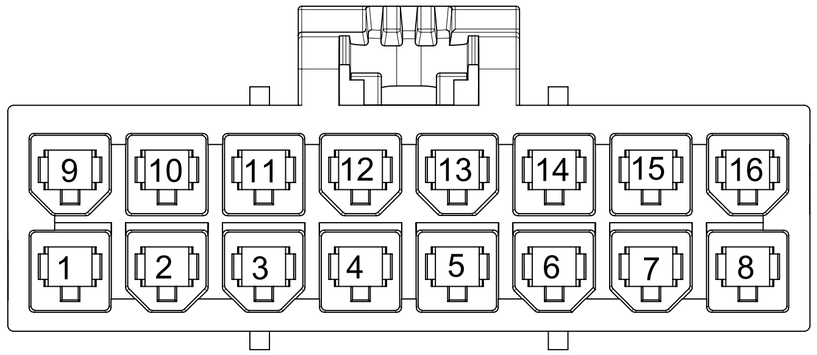

16 CKT

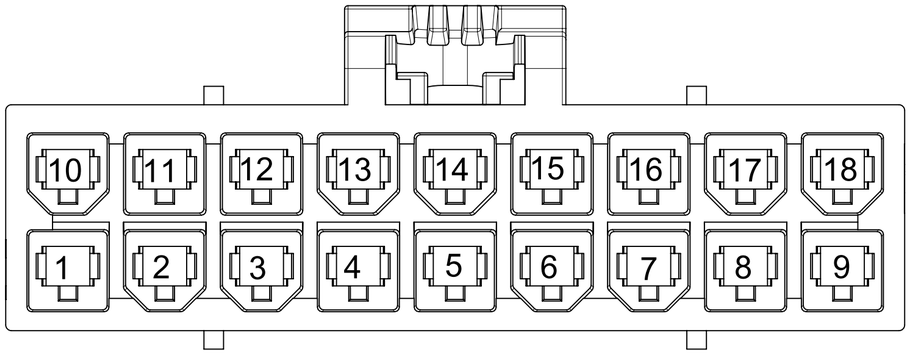

18 CKT

THIS DRAWING CONTAINS INFORMATION THAT IS PROPRIETARY TO MOLEX ELECTRONIC TECHNOLOGIES, LLC AND SHOULD NOT BE USED WITHOUT WRITTEN PERMISSION

DIMENSION UNITS	SCALE
mm	NTS

GENERAL TOLERANCES (UNLESS SPECIFIED)

ANGULAR TOL	± °
4 PLACES	±
3 PLACES	±
2 PLACES	± 0.25
1 PLACE	±
0 PLACES	±

DRAFT WHERE APPLICABLE MUST REMAIN WITHIN DIMENSIONS

CURRENT REV DESC:

EC NO: 793650
DRWN: JERRYW8 2024/07/30
CHK'D: XQZHANG 2024/07/30
APPR: XQZHANG 2024/07/30

INITIAL REVISION:
DRWN: ALUO02 2019/06/20
APPR: AYIN 2019/06/24

molex

SD-DRAWING OF MINI-FIT SIGMA REC HOUSING

PRODUCT CUSTOMER DRAWING

DOCUMENT NUMBER	DOC TYPE	DOC PART	REVISION
1727080002-SD	PSD	000	C7

THIRD ANGLE PROJECTION	DRAWING	SERIES	MATERIAL NUMBER	CUSTOMER	SHEET NUMBER
	C-SIZE	172708	SEE TABLE	GENERAL MARKET	4 OF 4

DOCUMENT STATUS	P1	RELEASE DATE	2024/07/30 08:09:55

FORMAT: master-tb-prod-C
REVISION: J1
DATE: 2021/05/01