PLUG P/N	CKT	DIM "A"	DIM "B"	DIM "C"	DIM "D"
1727673002	2	5.40	5.80	10.80	4.95
1727673004	4	9.60	10.00	15.00	4.95
1727673006	6	13.80	14.20	19.20	4.95
1727673008	8	18.00	18.40	23.40	4.95
1727673010	10	22.20	22.60	27.60	12.95
1727673012	12	26.40	26.80	31.80	12.95
1727673014	14	30.60	31.00	36.00	12.95
1727673016	16	34.80	35.20	40.20	12.95
1727673018	18	39.00	39.40	44.40	20.95

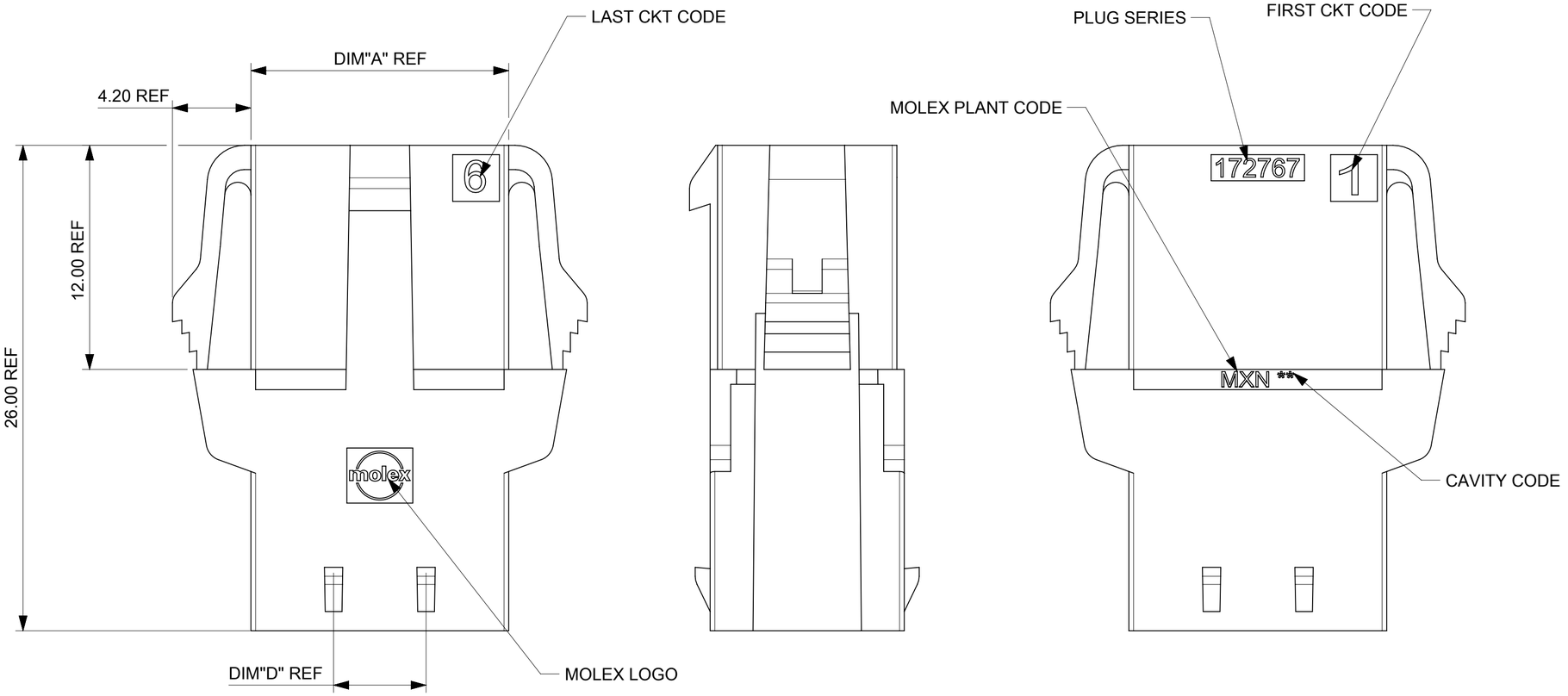

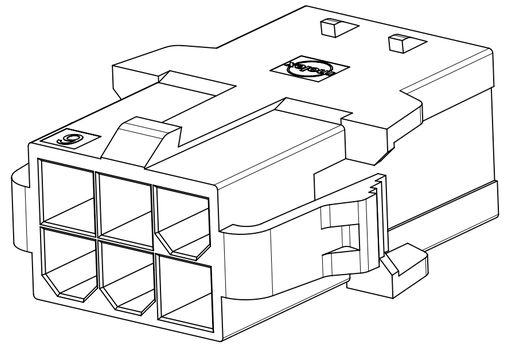

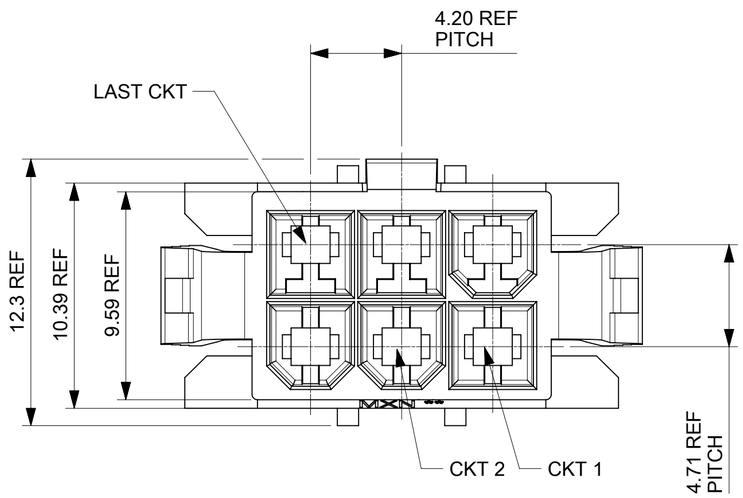

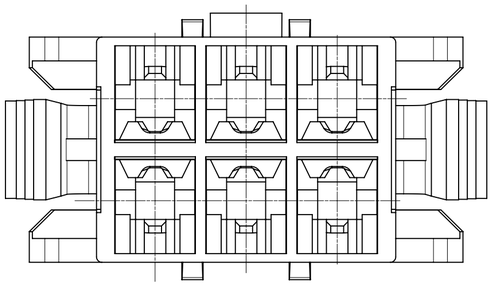

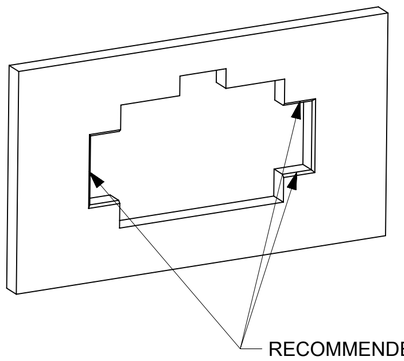

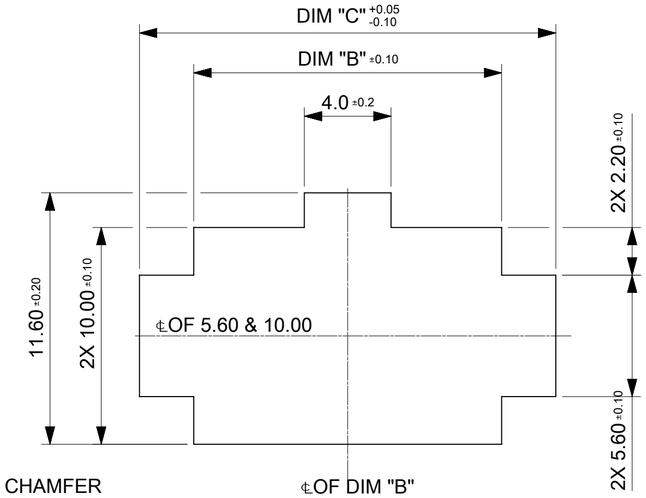

RECOMMENDED PANEL CUT-OUT DIMENSIONS
PANEL THICKNESS 0.80-2.00MM

NOTES:
1. MATERIAL:
   NYLON, UL 94V-0 AND GLOW WIRE CAPABLE PER IEC60335-1; COLOR: BLACK
2. FINISH: NONE
3. PRODUCT SPECIFICATION: 2131370000-PS/2029880002-PS
   APPLICATION SPECIFICATION: 2131370000-AS
4. PACKAGING SPECIFICATION: 172762-0001-PK
   REFER TO AS-45499-001 FOR MOISTURIZING NYLON CONNECTOR PARTS.
5. THIS PART TO BE USED WITH FEMALE TERMINAL SERIES 172765, 203070 AND TPA SERIES 172709-2***.
6. THIS PART MATES WITH SERIES 172708-1***
7. THIS PART CONFORMS TO CLASS 'B' REQUIREMENTS OF COSMETIC SPECIFICATION PS-45499-002.
8. SEE DRAWING 1727090002-SD FOR OTHER TPA INFORMATION.
9. SEE DRAWING 1727080002-SD FOR OTHER RECEPTACLE INFORMATION.
10. SEE DRAWINGS SD-172718-0000 AND 2029880001-PSD FOR OTHER CRIMP TERMINAL INFORMATION.

THIS DRAWING CONTAINS INFORMATION THAT IS PROPRIETARY TO MOLEX ELECTRONIC TECHNOLOGIES, LLC AND SHOULD NOT BE USED WITHOUT WRITTEN PERMISSION

DIMENSION UNITS	SCALE
mm	NTS

GENERAL TOLERANCES (UNLESS SPECIFIED)

ANGULAR TOL	±	°
4 PLACES	±	
3 PLACES	±	
2 PLACES	±	0.25
1 PLACE	±	0.36
0 PLACES	±	

DRAFT WHERE APPLICABLE MUST REMAIN WITHIN DIMENSIONS

CURRENT REV DESC:

EC NO: 787525
DRWN: JERRYW8 2024/05/28
CHK'D: XQZHANG 2024/05/30
APPR: XQZHANG 2024/05/30

INITIAL REVISION:
DRWN: ALUO02 2019/09/24
APPR: YXZHENG 2019/10/11

molex

SD-DRAWING OF MINI-FIT SIGMA DR PLUG

PRODUCT CUSTOMER DRAWING

DOCUMENT NUMBER	DOC TYPE	DOC PART	REVISION
1727670002-SD	PSD	000	A7

THIRD ANGLE PROJECTION	DRAWING	SERIES	MATERIAL NUMBER	CUSTOMER	SHEET NUMBER
	A2-SIZE	172767	SEE TABLE	GENERAL MARKET	1 OF 4

DOCUMENT STATUS	P1	RELEASE DATE	2024/05/30 09:41:52

FORMAT: master-tb-prod-A2
REVISION: 21
DATE: 2021/05/01

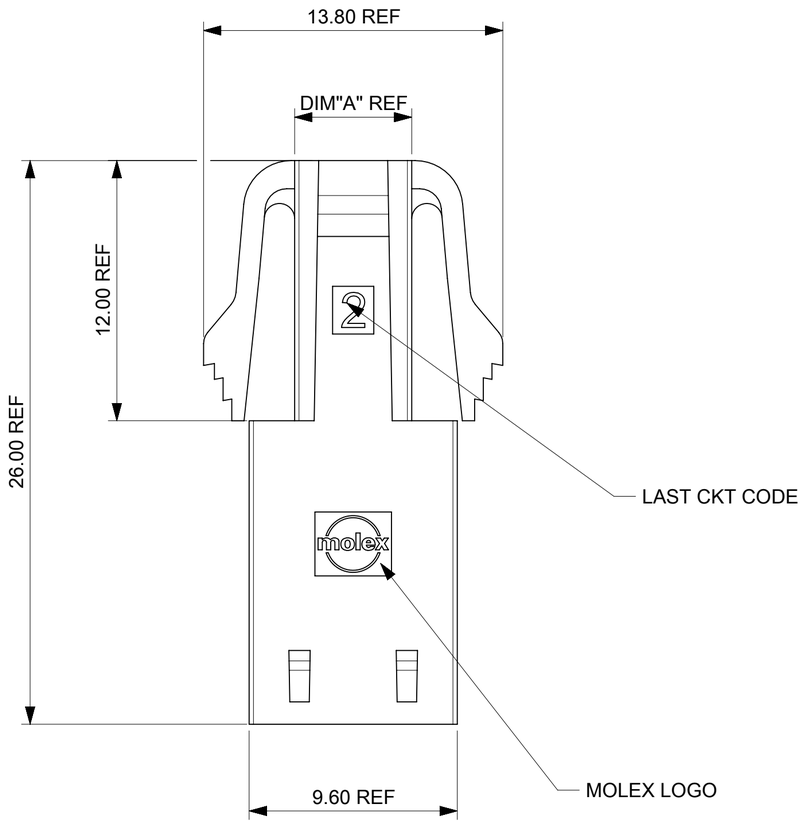

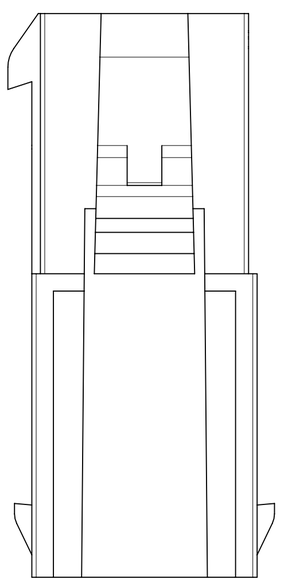

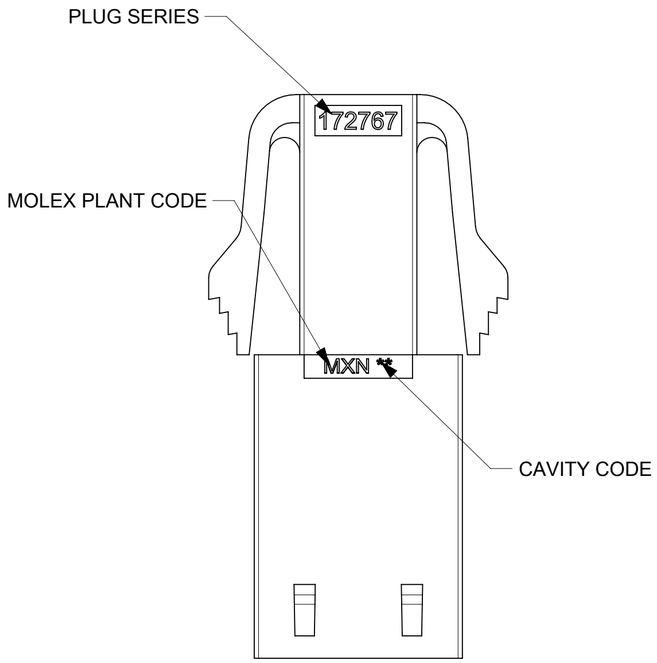

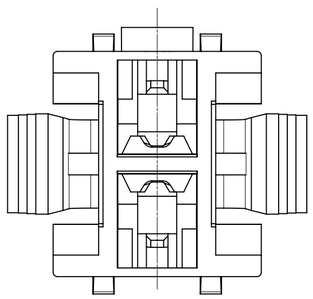

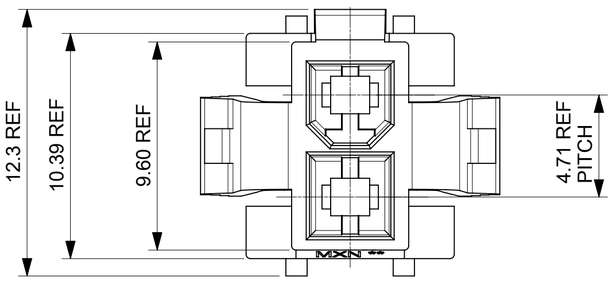

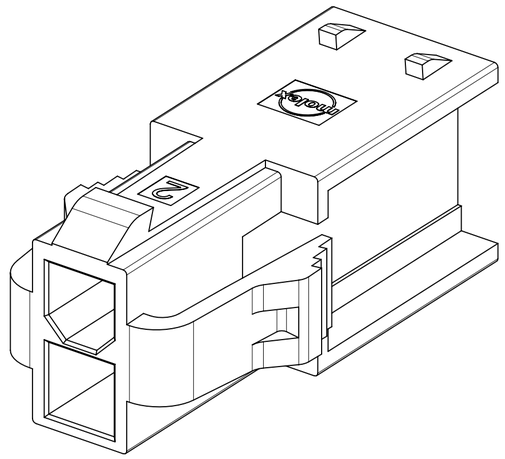

THIS DRAWING CONTAINS INFORMATION THAT IS PROPRIETARY TO MOLEX ELECTRONIC TECHNOLOGIES, LLC AND SHOULD NOT BE USED WITHOUT WRITTEN PERMISSION

DIMENSION UNITS	SCALE
mm	NTS

GENERAL TOLERANCES (UNLESS SPECIFIED)

ANGULAR TOL	±	°
4 PLACES	±	
3 PLACES	±	
2 PLACES	±	0.25
1 PLACE	±	0.36
0 PLACES	±	

DRAFT WHERE APPLICABLE MUST REMAIN WITHIN DIMENSIONS

CURRENT REV DESC:

EC NO: 787525

DRWN:	JERRYW8	2024/05/28
CHK'D:	XQZHANG	2024/05/30
APPR:	XQZHANG	2024/05/30

INITIAL REVISION:

DRWN:	ALUO02	2019/09/24
APPR:	YXZHENG	2019/10/11

THIRD ANGLE PROJECTION

molex

SD-DRAWING OF MINI-FIT SIGMA DR PLUG

PRODUCT CUSTOMER DRAWING

DOCUMENT NUMBER	DOC TYPE	DOC PART	REVISION
1727670002-SD	PSD	000	A7

DRAWING	SERIES	MATERIAL NUMBER	CUSTOMER	SHEET NUMBER
A2-SIZE	172767	SEE TABLE	GENERAL MARKET	2 OF 4

DOCUMENT STATUS	P1	RELEASE DATE	2024/05/30 09:41:52

FORMAT: master-tb-prod-A2
REVISION: 21
DATE: 2021/05/01

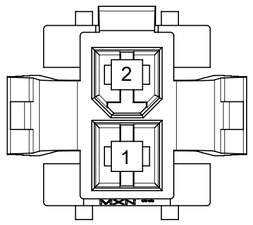

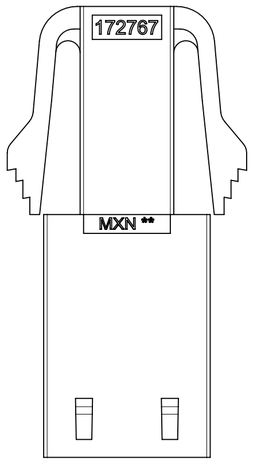

2-CKT

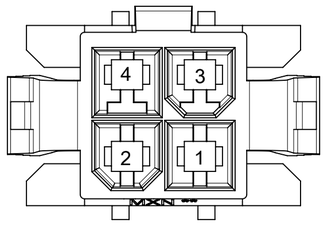

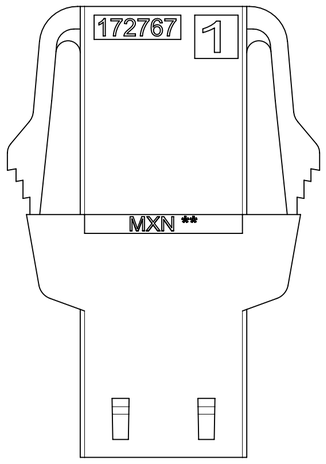

4-CKT

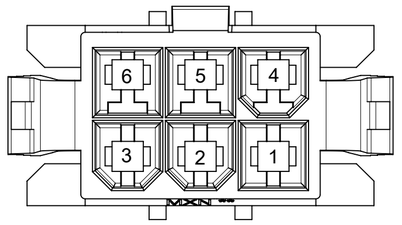

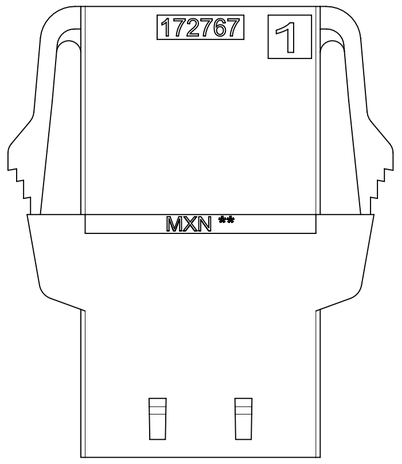

6-CKT

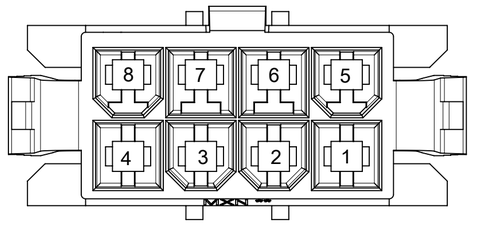

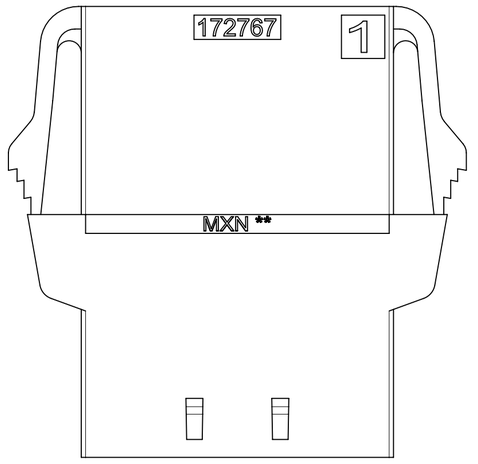

8-CKT

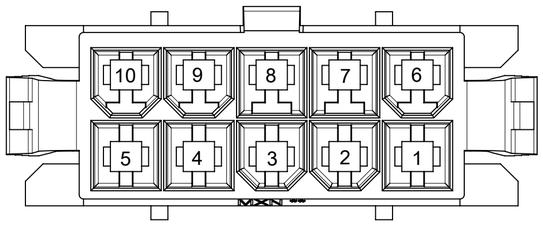

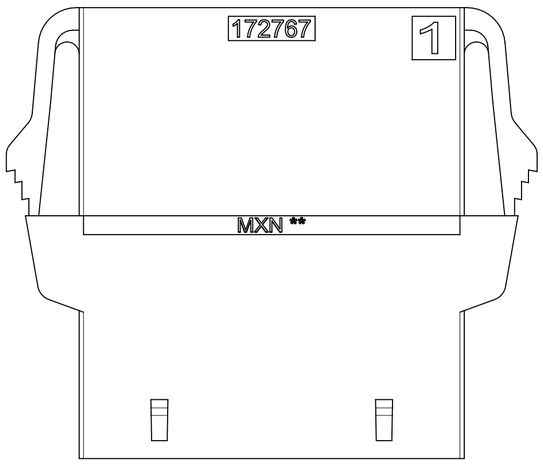

10-CKT

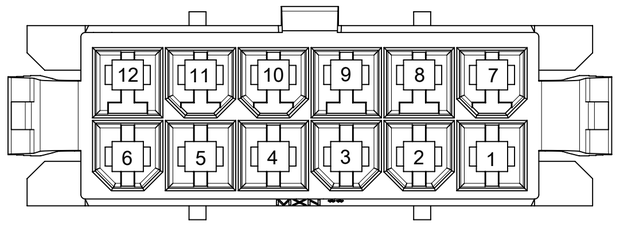

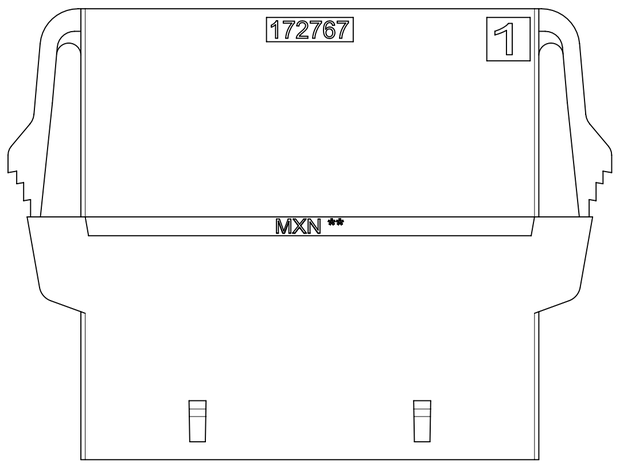

12-CKT

THIS DRAWING CONTAINS INFORMATION THAT IS PROPRIETARY TO MOLEX ELECTRONIC TECHNOLOGIES, LLC AND SHOULD NOT BE USED WITHOUT WRITTEN PERMISSION

DIMENSION UNITS	SCALE
mm	NTS

GENERAL TOLERANCES (UNLESS SPECIFIED)

ANGULAR TOL	±	°
4 PLACES	±	
3 PLACES	±	
2 PLACES	±	0.25
1 PLACE	±	0.36
0 PLACES	±	

DRAFT WHERE APPLICABLE MUST REMAIN WITHIN DIMENSIONS

CURRENT REV DESC:

EC NO: 787525

DRWN:	JERRYW8	2024/05/28
CHK'D:	XQZHANG	2024/05/30
APPR:	XQZHANG	2024/05/30

INITIAL REVISION:

DRWN:	ALUO02	2019/09/24
APPR:	YXZHENG	2019/10/11

THIRD ANGLE PROJECTION

DRAWING	SERIES
A2-SIZE	172767

molex

SD-DRAWING OF MINI-FIT SIGMA DR PLUG

PRODUCT CUSTOMER DRAWING

DOCUMENT NUMBER	DOC TYPE	DOC PART	REVISION
1727670002-SD	PSD	000	A7

MATERIAL NUMBER	CUSTOMER	SHEET NUMBER
SEE TABLE	GENERAL MARKET	3 OF 4

DOCUMENT STATUS	P1	RELEASE DATE	2024/05/30 09:41:52

FORMAT: master-tb-prod-A2
REVISION: 21
DATE: 2021/05/01

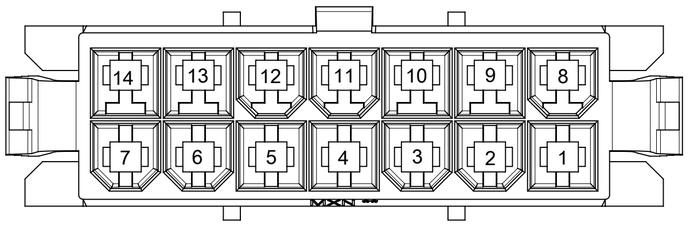

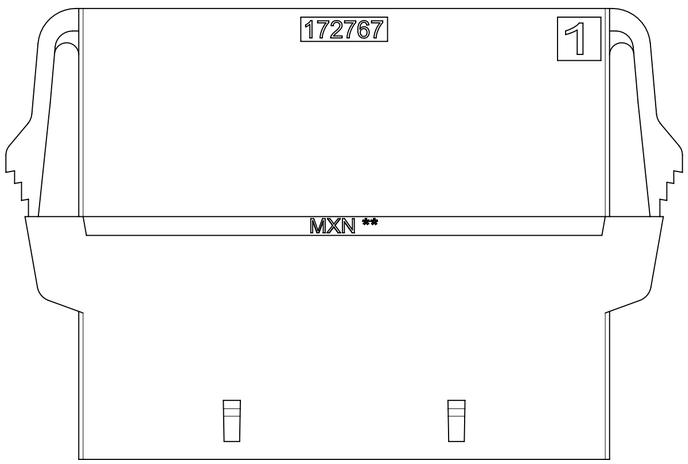

14-CKT

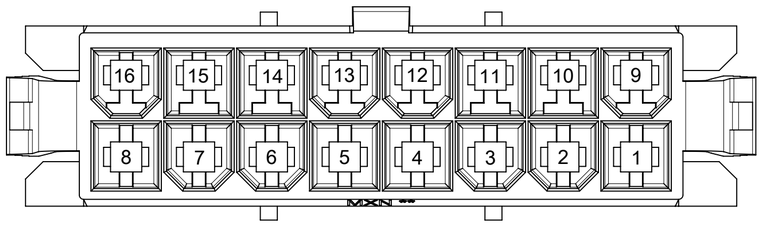

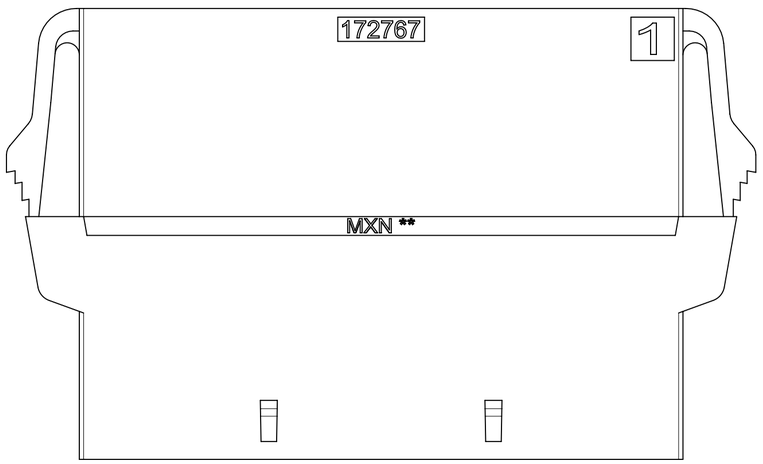

16-CKT

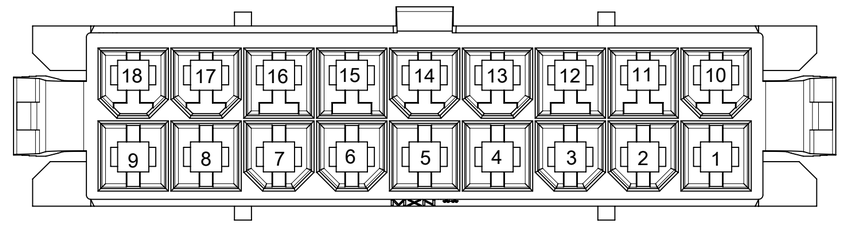

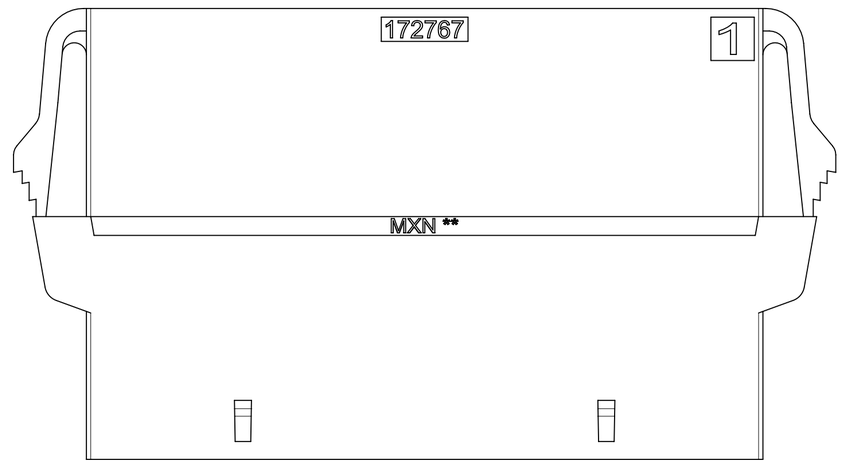

18-CKT

THIS DRAWING CONTAINS INFORMATION THAT IS PROPRIETARY TO MOLEX ELECTRONIC TECHNOLOGIES, LLC AND SHOULD NOT BE USED WITHOUT WRITTEN PERMISSION

DIMENSION UNITS	SCALE
mm	NTS

GENERAL TOLERANCES (UNLESS SPECIFIED)

ANGULAR TOL	±	°
4 PLACES	±	
3 PLACES	±	
2 PLACES	±	0.25
1 PLACE	±	0.36
0 PLACES	±	

DRAFT WHERE APPLICABLE MUST REMAIN WITHIN DIMENSIONS

CURRENT REV DESC:

EC NO: 787525

DRWN:	JERRYW8	2024/05/28
CHK'D:	XQZHANG	2024/05/30
APPR:	XQZHANG	2024/05/30

INITIAL REVISION:

DRWN:	ALUO02	2019/09/24
APPR:	YXZHENG	2019/10/11

molex

SD-DRAWING OF MINI-FIT SIGMA DR PLUG

PRODUCT CUSTOMER DRAWING

DOCUMENT NUMBER	DOC TYPE	DOC PART	REVISION
1727670002-SD	PSD	000	A7

THIRD ANGLE PROJECTION	DRAWING	SERIES	MATERIAL NUMBER	CUSTOMER	SHEET NUMBER
	A2-SIZE	172767	SEE TABLE	GENERAL MARKET	4 OF 4

DOCUMENT STATUS	P1	RELEASE DATE	2024/05/30 09:41:52

FORMAT: master-tb-prod-A2
REVISION: 21
DATE: 2021/05/01