RoHS compliant
by exemption

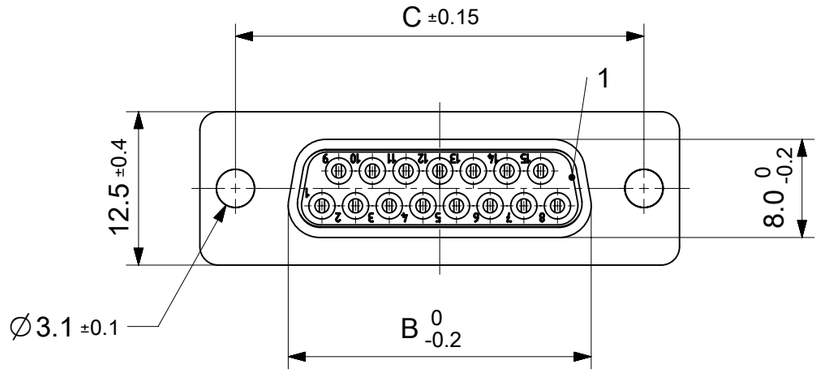

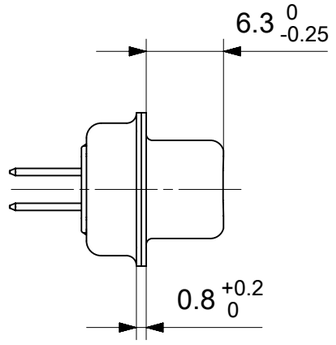

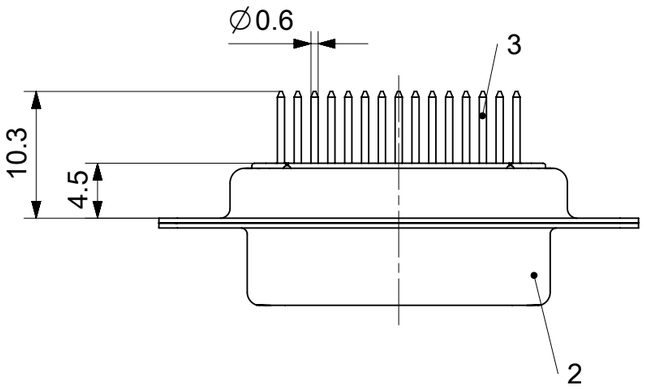

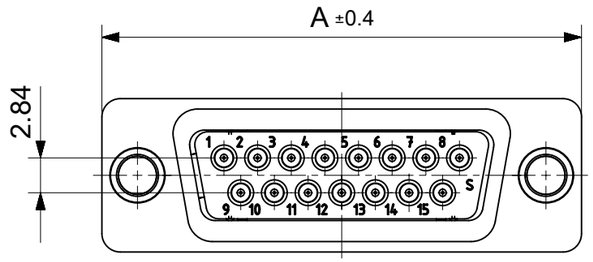

FCT Part number:

Fxx*1)S1G1A

e.g. F15S1G1A

*1) xx No. of contacts 09, 15, 25 or 37

Material Number	xx*1)	A[mm]	B[mm]	C[mm]	*E[mm]
1731090694	09	30.8	16.4	25	∅1
1731090704	15	39.1	24.7	33.3	
1731090713	25	53	38.5	47.04	
1731090649	37	69.3	54.9	63.5	

*PCB hole patterns ∅E see document 2195600023

No.	Pc.	Part	Type Description/Material	Surface plating/ Color/Class
3	xx	Signal contact	S1 / Brass	Auropur
2	1	Shell	Steel	tin plated
1	1	Insulator	PBT (-55°C to +125°C) acc. UL94V-0	white

MEASUREMENTS WITHOUT TOLERANCE ACC TO ISO 2768-m

REPLACEMENT FOR DOCUMENT NUMBER: FxxS1G1A

FUNCTIONAL SYMBOLS: FA = 0, FC = 0, FP = 0

DIVISIONAL SYMBOLS

THIS DRAWING CONTAINS INFORMATION THAT IS PROPRIETARY TO MOLEX ELECTRONIC TECHNOLOGIES, LLC AND SHOULD NOT BE USED WITHOUT WRITTEN PERMISSION

DIMENSION UNITS: mm | SCALE: 2:1

GENERAL TOLERANCES (UNLESS SPECIFIED)

ANGULAR TOL	± °
4 PLACES	±
3 PLACES	±
2 PLACES	±
1 PLACE	±
0 PLACES	±

DRAFT WHERE APPLICABLE MUST REMAIN WITHIN DIMENSIONS

CURRENT REV DESC:

EC NO: 707726
DRWN: GOOLAM 2021/11/30
CHK'D: MTEUBEL 2022/05/25
APPR: MTEUBEL 2022/05/25

INITIAL REVISION:
DRWN: GOOLAM 2021/11/30
APPR: MTEUBEL 2022/05/25

FIRST ANGLE PROJECTION | DRAWING: A3-SIZE | SERIES: 173109

molex

FCT D-SUB MINIATURE CONNECTOR

PRODUCT CUSTOMER DRAWING

DOCUMENT NUMBER	DOC TYPE	DOC PART	REVISION
1731090694	PSD	000	A

MATERIAL NUMBER	CUSTOMER	SHEET NUMBER
SEE TABLE	GENERAL MARKET	1 OF 1

DOCUMENT STATUS	P1	RELEASE DATE	2022/05/25 08:51:14

FORMAT: master_tb_mod-A3
REVISION: J1
DATE: 2021/05/01

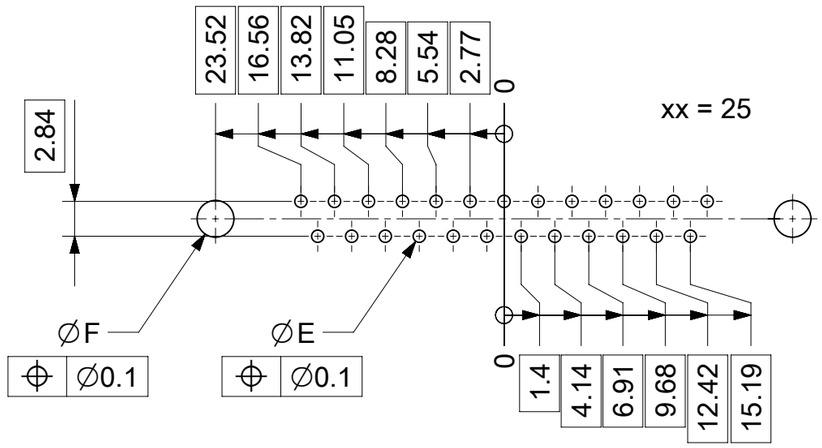

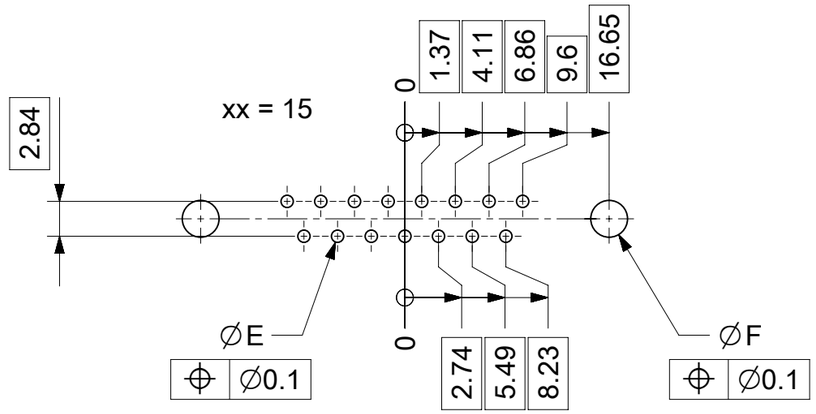

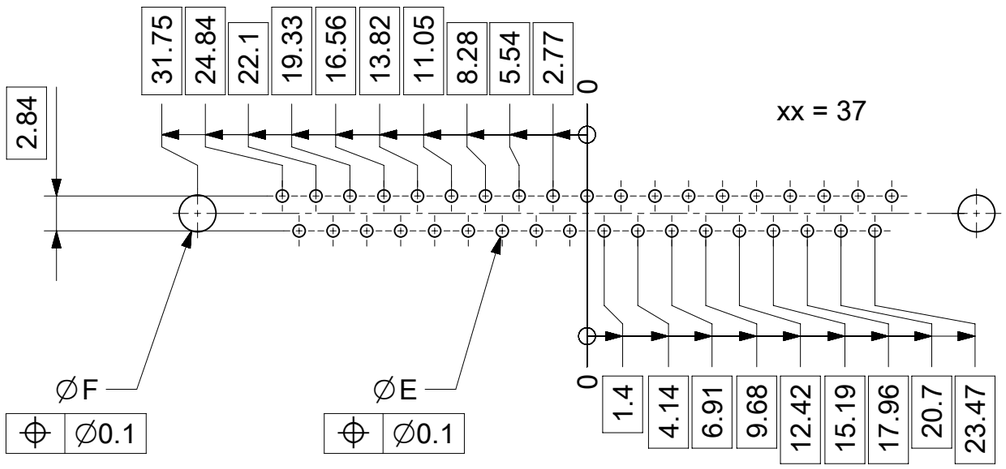

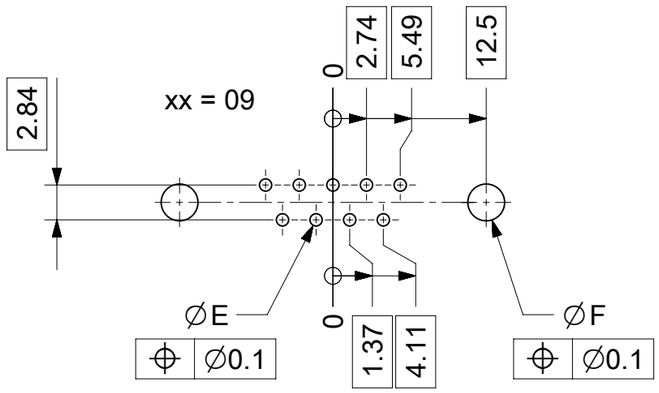

øE, øF see data sheet incl. connector
øF connectors with accessories only

MEASUREMENTS WITHOUT TOLERANCE ACC TO ISO 2768-m				REPLACEMENT FOR DOCUMENT NUMBER: AM0023	
FUNCTIONAL SYMBOLS	THIS DRAWING CONTAINS INFORMATION THAT IS PROPRIETARY TO MOLEX ELECTRONIC TECHNOLOGIES, LLC AND SHOULD NOT BE USED WITHOUT WRITTEN PERMISSION				
FA = 0	DIMENSION UNITS: mm	SCALE: 2:1	CURRENT REV DESC:	molex	
FC = 0	GENERAL TOLERANCES (UNLESS SPECIFIED)			FCT PCB HOLE PATTERN STRAIGHT CONTACT NO. OF CONTACTS 09-37	
FP = 0	ANGULAR TOL ± °		EC NO: 713905		
DIVISIONAL SYMBOLS	4 PLACES ±		DRWN: SKANDB 2022/05/16	PRODUCT CUSTOMER DRAWING	
	3 PLACES ±		CHK'D: MTEUBEL 2022/07/12	DOCUMENT NUMBER: 2195600023	DOC TYPE: PSD / DOC PART: 000 / REVISION: A
	2 PLACES ±		APPR: MTEUBEL 2022/07/12		
	1 PLACE ±		INITIAL REVISION:		
	0 PLACES ±		DRWN: SKANDB 2022/05/16		
	DRAFT WHERE APPLICABLE MUST REMAIN WITHIN DIMENSIONS		APPR: MTEUBEL 2022/07/12		
	FIRST ANGLE PROJECTION	DRAWING: A3-SIZE	SERIES: 219560	MATERIAL NUMBER: 219560	CUSTOMER: GENERAL MARKET / SHEET NUMBER: 1 OF 1

DOCUMENT STATUS	P1	RELEASE DATE	2022/07/12 08:25:55

FORMAT: master_prod-A3
REVISION: J1
DATE: 2021/05/05