THIS DRAWING IS UNPUBLISHED. RELEASED FOR PUBLICATION 20
© COPYRIGHT 20 BY TYCO ELECTRONICS CORPORATION. ALL RIGHTS RESERVED.

LOC	DIST
GP	00

REVISIONS

P	LTR	DESCRIPTION	DATE	DWN	APVD
	A	RELEASE PER ECO-05-009687	20SEP2005	DRR	MY
	B	REVISED PER ECO-05-015421	06DEC2005	DRR	LZ
	B2	ECR-10-013906	12JUL10	D.S	S.Y
	B3	ECR-11-013206	27JUN2011	D.P	C.W

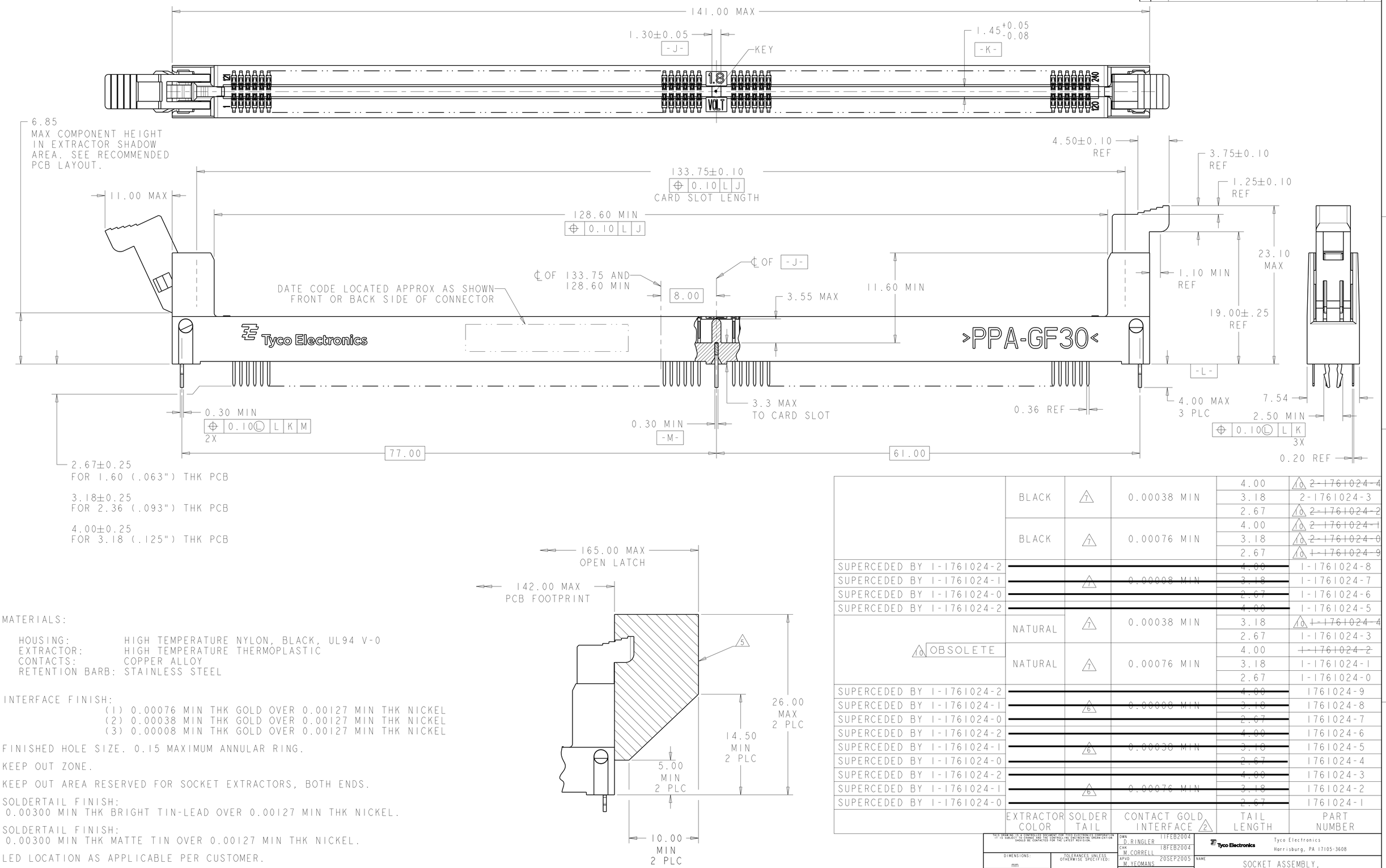

1. MATERIALS:
   - HOUSING: HIGH TEMPERATURE NYLON, BLACK, UL94 V-0
   - EXTRACTOR: HIGH TEMPERATURE THERMOPLASTIC
   - CONTACTS: COPPER ALLOY
   - RETENTION BARB: STAINLESS STEEL
2. INTERFACE FINISH:
   (1) 0.00076 MIN THK GOLD OVER 0.00127 MIN THK NICKEL
   (2) 0.00038 MIN THK GOLD OVER 0.00127 MIN THK NICKEL
   (3) 0.00008 MIN THK GOLD OVER 0.00127 MIN THK NICKEL
3. FINISHED HOLE SIZE. 0.15 MAXIMUM ANNULAR RING.
4. KEEP OUT ZONE.
5. KEEP OUT AREA RESERVED FOR SOCKET EXTRACTORS, BOTH ENDS.
6. SOLDERTAIL FINISH: 0.00300 MIN THK BRIGHT TIN-LEAD OVER 0.00127 MIN THK NICKEL.
7. SOLDERTAIL FINISH: 0.00300 MIN THK MATTE TIN OVER 0.00127 MIN THK NICKEL.
8. LED LOCATION AS APPLICABLE PER CUSTOMER.
9. DATUM -G- IS CONNECTOR SIDE SURFACE OF PCB.
10. OBSOLETE PARTS: OBSOLETE CIS STREAMLINING PER D.RENAUD/D.SINISI

EXTRACTOR COLOR	SOLDER TAIL	CONTACT GOLD INTERFACE 2	TAIL LENGTH	PART NUMBER
BLACK	7	0.00038 MIN	4.00	10 ~~2-1761024-4~~
			3.18	2-1761024-3
			2.67	10 ~~2-1761024-2~~
BLACK	7	0.00076 MIN	4.00	10 ~~2-1761024-1~~
			3.18	10 ~~2-1761024-0~~
			2.67	10 ~~1-1761024-9~~
SUPERCEDED BY 1-1761024-2			4.00	1-1761024-8
SUPERCEDED BY 1-1761024-1	1	0.00008 MIN	3.18	1-1761024-7
SUPERCEDED BY 1-1761024-0			2.67	1-1761024-6
SUPERCEDED BY 1-1761024-2			4.00	1-1761024-5
NATURAL	7	0.00038 MIN	3.18	10 ~~1-1761024-4~~
			2.67	1-1761024-3
10 OBSOLETE NATURAL	7	0.00076 MIN	4.00	~~1-1761024-2~~
			3.18	1-1761024-1
			2.67	1-1761024-0
SUPERCEDED BY 1-1761024-2			4.00	1761024-9
SUPERCEDED BY 1-1761024-1	6	0.00008 MIN	3.18	1761024-8
SUPERCEDED BY 1-1761024-0			2.67	1761024-7
SUPERCEDED BY 1-1761024-2			4.00	1761024-6
SUPERCEDED BY 1-1761024-1	6	0.00030 MIN	3.18	1761024-5
SUPERCEDED BY 1-1761024-0			2.67	1761024-4
SUPERCEDED BY 1-1761024-2			4.00	1761024-3
SUPERCEDED BY 1-1761024-1	6	0.00076 MIN	3.18	1761024-2
SUPERCEDED BY 1-1761024-0			2.67	1761024-1

THIS DRAWING IS A CONTROLLED DOCUMENT OF TYCO ELECTRONICS CORPORATION IT IS SUBJECT TO CHANGE AND THE CONTROLLING ENGINEERING ORGANIZATION SHOULD BE CONTACTED FOR THE LATEST REVISION.

DIMENSIONS: mm

TOLERANCES UNLESS OTHERWISE SPECIFIED:
0 PLC ±-
1 PLC ±0.5
2 PLC ±0.13
3 PLC ±0.013
4 PLC ±0.0001
ANGLES ±-

MATERIAL - 1
FINISH - 2 6 7

DWN D.RINGLER 11FEB2004
CHK M.CORRELL 18FEB2004
APVD M.YEOMANS 20SEP2005
PRODUCT SPEC 108-2214
APPLICATION SPEC 114-13154
WEIGHT -

Tyco Electronics
Tyco Electronics
Harrisburg, PA 17105-3608

NAME SOCKET ASSEMBLY, VERTICAL FB DIMM, SOLDER TAIL, 240 POSITION

SIZE A | CAGE CODE 00779 | DRAWING NO C-1761024 | RESTRICTED TO -

CUSTOMER DRAWING | SCALE 4:1 | SHEET 1 OF 3 | REV B3

AMP 4805 REV 31MAR2000

Pro/ENGINEER DRAWING

THIS DRAWING IS UNPUBLISHED. RELEASED FOR PUBLICATION 20
© COPYRIGHT 20 BY TYCO ELECTRONICS CORPORATION. ALL RIGHTS RESERVED.

LOC	DIST
GP	00

REVISIONS

P	LTR	DESCRIPTION	DATE	DWN	APVD
	-	SEE SHEET 1	-	-	-

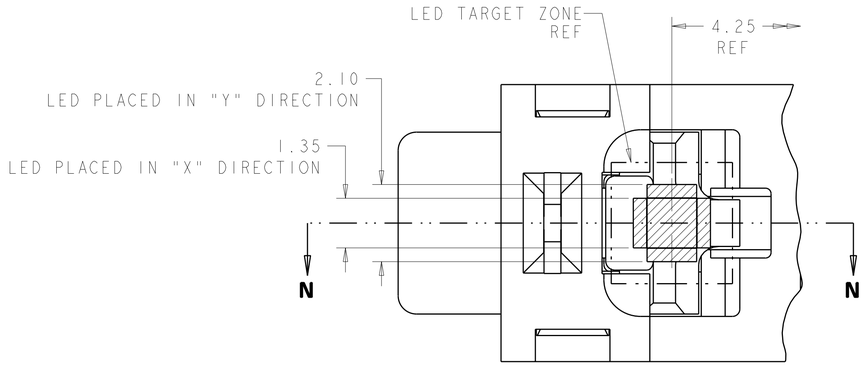

PARTIAL BOTTOM VIEW
SCALE 12:1
8

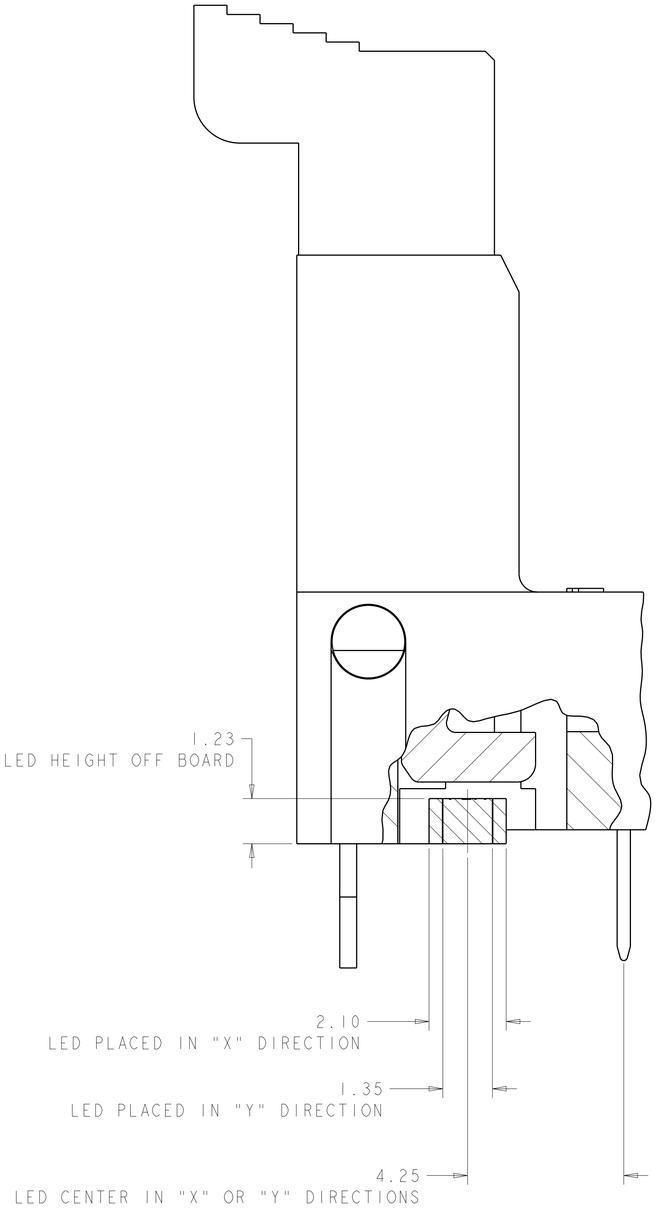

SECTION **N-N**
SCALE 12:1

THIS DRAWING IS A CONTROLLED DOCUMENT FOR TYCO ELECTRONICS CORPORATION. IT IS SUBJECT TO CHANGE AND THE CONTROLLING ENGINEERING ORGANIZATION SHOULD BE CONTACTED FOR THE LATEST REVISION.

DIMENSIONS: mm

TOLERANCES UNLESS OTHERWISE SPECIFIED:
0 PLC ±-
1 PLC ±0.5
2 PLC ±0.13
3 PLC ±0.013
4 PLC ±0.0001
ANGLES ±-

MATERIAL -
FINISH -

DWN D.RINGLER 11FEB2004
CHK M.CORRELL 18FEB2004
APVD M.YEOMANS 20SEP2005
PRODUCT SPEC 108-2214
APPLICATION SPEC 114-13154
WEIGHT -

Tyco Electronics
Tyco Electronics
Harrisburg, PA 17105-3608

NAME
SOCKET ASSEMBLY,
VERTICAL FB DIMM,
SOLDER TAIL, 240 POSITION

SIZE	CAGE CODE	DRAWING NO	RESTRICTED TO
A1	00779	C-1761024	-

CUSTOMER DRAWING
SCALE 4:1 SHEET 2 OF 3 REV B3

AMP 4805 REV 31MAR2000

THIS DRAWING IS UNPUBLISHED. RELEASED FOR PUBLICATION 20
© COPYRIGHT 20 BY TYCO ELECTRONICS CORPORATION. ALL RIGHTS RESERVED.

LOC	DIST
GP	00

REVISIONS

P	LTR	DESCRIPTION	DATE	DWN	APVD
	-	SEE SHEET 1	-	-	-

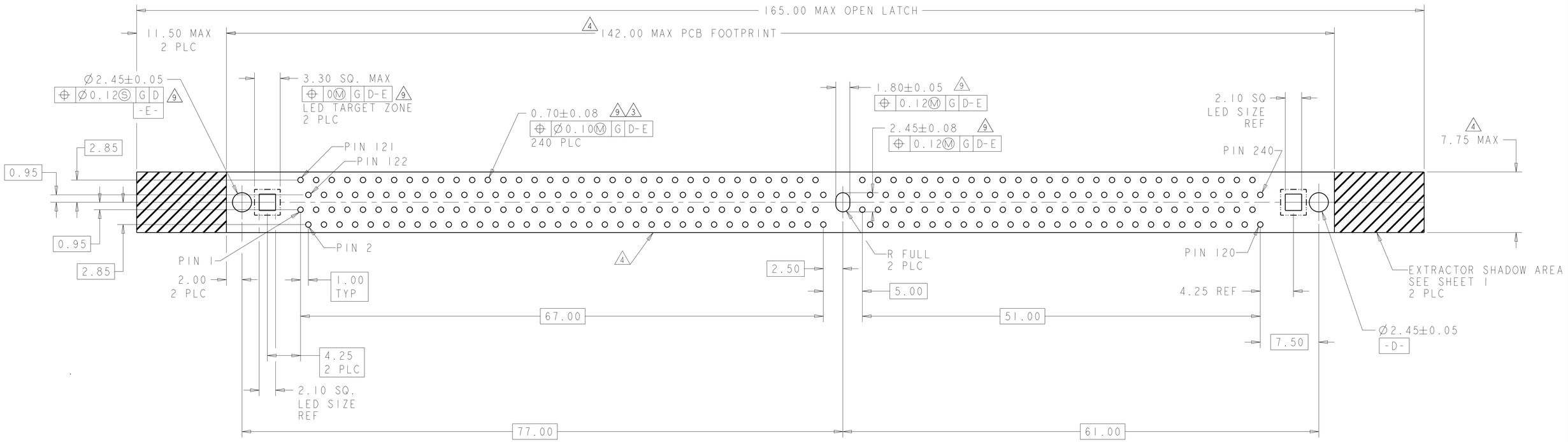

RECOMMENDED PCB LAYOUT
VIEWED FROM CONNECTOR SIDE

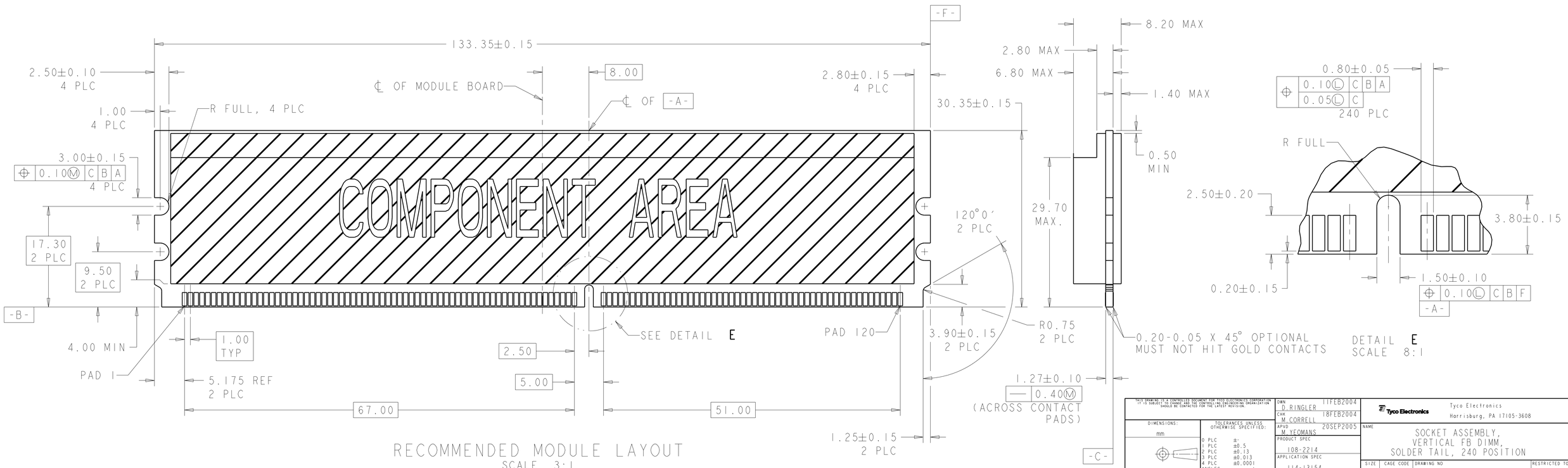

RECOMMENDED MODULE LAYOUT
SCALE 3:1

THIS DRAWING IS A CONTROLLED DOCUMENT FOR TYCO ELECTRONICS CORPORATION IT IS SUBJECT TO CHANGE AND THE CONTROLLING ENGINEERING ORGANIZATION SHOULD BE CONTACTED FOR THE LATEST REVISION.

DIMENSIONS: mm

TOLERANCES UNLESS OTHERWISE SPECIFIED:

0 PLC	± -
1 PLC	±0.5
2 PLC	±0.13
3 PLC	±0.013
4 PLC	±0.0001
ANGLES	± -

MATERIAL - -
FINISH - -

DWN	11FEB2004
	D RINGLER
CHK	18FEB2004
	M CORRELL
APVD	20SEP2005
	M YEOMANS
PRODUCT SPEC	108-2214
APPLICATION SPEC	114-13154
WEIGHT	-

Tyco Electronics
Tyco Electronics
Harrisburg, PA 17105-3608

NAME
SOCKET ASSEMBLY,
VERTICAL FB DIMM,
SOLDER TAIL, 240 POSITION

SIZE	CAGE CODE	DRAWING NO	RESTRICTED TO
A1	00779	C-1761024	-

CUSTOMER DRAWING | SCALE 1:1 | SHEET 3 OF 3 | REV B3