PCB terminal block - SPTD 1,5/10-H-3,5 - 1841571

Please be informed that the data shown in this PDF Document is generated from our Online Catalog. Please find the complete data in the user's documentation. Our General Terms of Use for Downloads are valid (http://phoenixcontact.com/download)



The figure shows a 10-position version of the product

PCB terminal block, Nominal current: 10 A, Nom. voltage: 200 V, Pitch: 3.5 mm, Number of positions: 10, Connection method: Push-in spring connection, Mounting: Wave soldering, Conductor/PCB connection direction: 0 °, Color: green

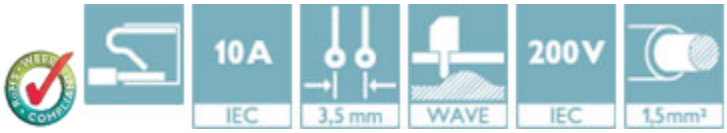

Key Commercial Data

Packing unit	1 pc
Minimum order quantity	25 pc
Weight per Piece (excluding packing)	22.4 g
Custom tariff number	85369010
Country of origin	China

Technical data

Dimensions

Length	18 mm
Pitch	3.50 mm
Dimension a	31.5 mm
Height	24.2 mm
Length of the solder pin	3.5 mm
Pin dimensions	0,6 x 1,0 mm
Pin spacing	9.35 mm
Hole diameter	1.3 mm

General

Range of articles	SPTD 1,5
Insulating material group	I
Rated surge voltage (III/3)	2.5 kV

PCB terminal block - SPTD 1,5/10-H-3,5 - 1841571

Technical data

General

Rated surge voltage (III/2)	2.5 kV
Rated surge voltage (II/2)	2.5 kV
Rated voltage (III/3)	160 V
Rated voltage (III/2)	200 V
Rated voltage (II/2)	400 V
Connection in acc. with standard	EN-VDE
Nominal current I_N	10 A
Nominal cross section	1.5 mm²
Maximum load current	10 A
Insulating material	PA
Solder pin surface	Sn
Flammability rating according to UL 94	V0
Stripping length	8 mm
Number of positions	10

Connection data

Conductor cross section solid min.	0.14 mm²
Conductor cross section solid max.	1.5 mm²
Conductor cross section flexible min.	0.14 mm²
Conductor cross section flexible max.	1.5 mm²
Conductor cross section flexible, with ferrule without plastic sleeve min.	0.2 mm²
Conductor cross section flexible, with ferrule without plastic sleeve max.	1.5 mm²
Conductor cross section flexible, with ferrule with plastic sleeve min.	0.2 mm²
Conductor cross section flexible, with ferrule with plastic sleeve max.	0.75 mm²
Conductor cross section AWG min.	26
Conductor cross section AWG max.	16

Standards and Regulations

Connection in acc. with standard	EN-VDE
Flammability rating according to UL 94	V0

Classifications

eCl@ss

eCl@ss 5.1	27141190
eCl@ss 6.0	27261101
eCl@ss 8.0	27440401
eCl@ss 9.0	27440401

PCB terminal block - SPTD 1,5/10-H-3,5 - 1841571

Classifications

ETIM

ETIM 4.0	EC002643
ETIM 5.0	EC002643

Approvals

Approvals

Approvals

cULus Recognized / VDE Zeichengenehmigung / IECEE CB Scheme / EAC

Ex Approvals

Approvals submitted

Approval details

cULus Recognized	
	B
mm²/AWG/kcmil	26-14
Nominal current IN	10 A
Nominal voltage UN	150 V

VDE Zeichengenehmigung	
mm²/AWG/kcmil	0.14-1.5
Nominal current IN	10 A
Nominal voltage UN	200 V

IECEE CB Scheme	
mm²/AWG/kcmil	1.5

PCB terminal block - SPTD 1,5/10-H-3,5 - 1841571

Approvals

Nominal current IN	10 A
Nominal voltage UN	200 V

EAC

Drawings

Drilling diagram

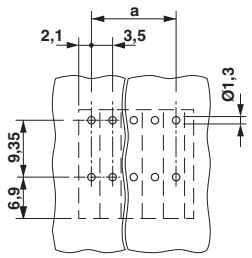

Diagram

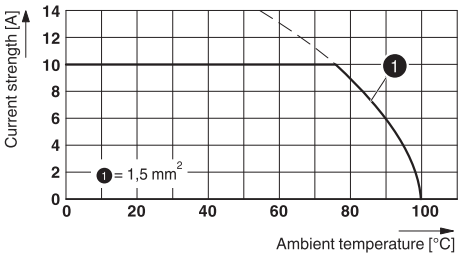

Type: SPTD 1,5/...-H-3,5

Dimensional drawing

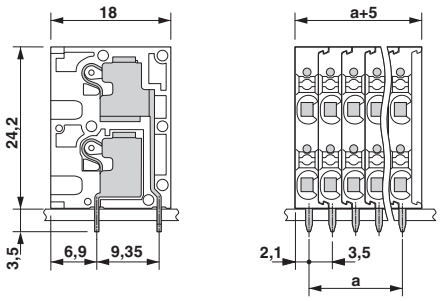

Phoenix Contact 2016 © - all rights reserved
http://www.phoenixcontact.com