MATERIAL NUMBER	ENGINEERING NUMBER	FINISH	CARRIER
190220123	MCT-17SN	TIN PLATING	LOOSE PIECE
190220124	MCT-17SNT		TAPE MOUNTED

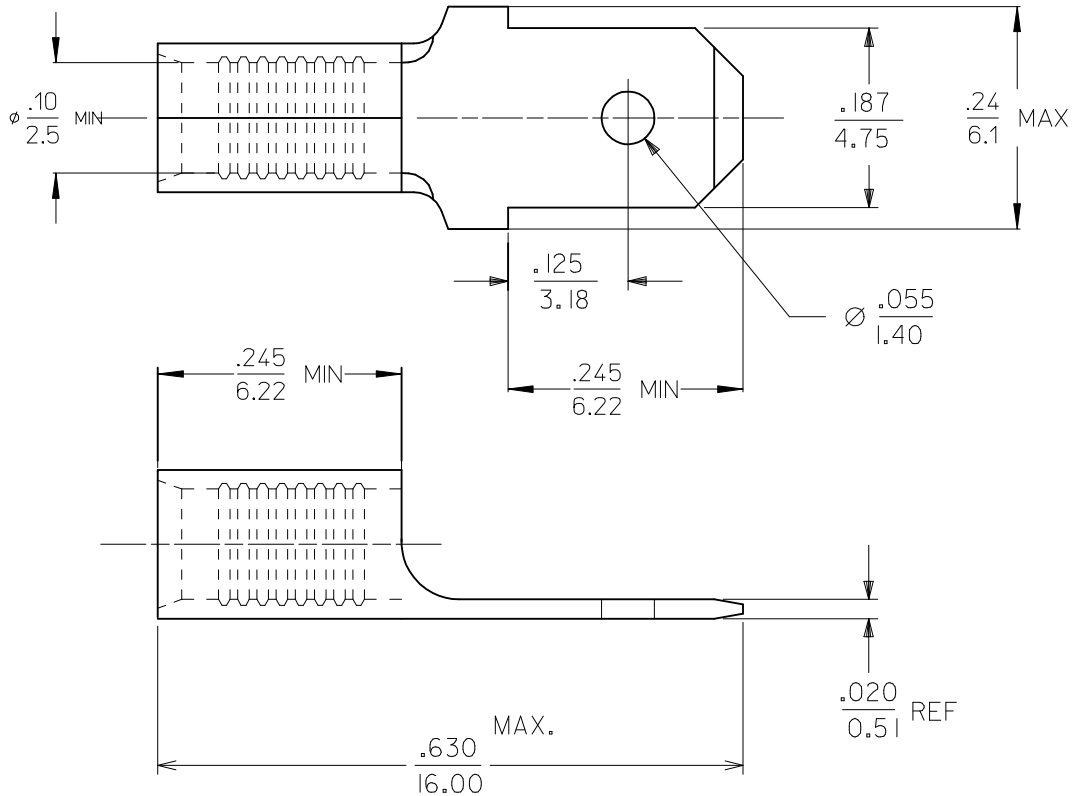

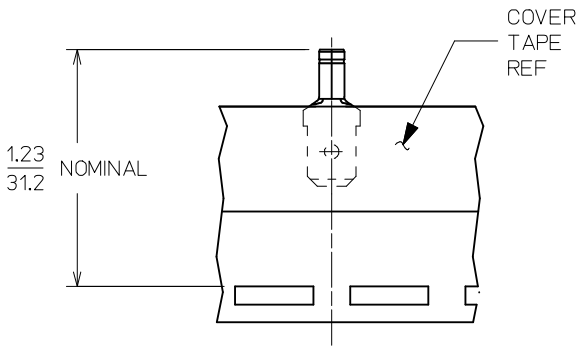

190220124 (MCT-17SNT)
PARTS ON TAPE

NOTES:
1. MATERIAL: BRASS
2. FINISH: SEE CHART
3. WIRE SIZE: 16-14 AWG (1.23-1.94 mm²)
4. TAB DIMENSIONS CONFORM TO UL310 SPECIFICATIONS.
5. PART IS ROHS COMPLIANT.

RELEASE TO PROD.
EC NO: IPG2017-0615
DRWN: DMYRICK 2016/12/20
CHKD:
APPR: JMACNEIL 2016/12/20
DESCRIPTION
A
REV

QUALITY SYMBOLS
=0
=0
=0

GENERAL TOLERANCES (UNLESS SPECIFIED)

	mm	INCH
4 PLACES	± ---	± ---
3 PLACES	± ---	± .005
2 PLACES	± 0.13	± .01
1 PLACE	± 0.25	± ---
0 PLACE	± ---	± ---

ANGULAR ± 1 °
DRAFT WHERE APPLICABLE MUST REMAIN WITHIN DIMENSIONS

DIMENSION STYLE: IN/MM
SCALE: 10:1
DESIGN UNITS: INCH
THIRD ANGLE PROJECTION

DRAWN BY: DMYRICK DATE: 2016/12/20
CHECKED BY: DATE:
APPROVED BY: JMACNEIL DATE: 2016/12/20
MATERIAL NO.: SEE CHART

TITLE: MALE CONNECTOR TERMINAL LONG BARREL .187" X .020", 16-14 AWG

molex

DOCUMENT NO.: SD-19022-020
SHEET NO.: 1 OF 1
SIZE: C

THIS DRAWING CONTAINS INFORMATION THAT IS PROPRIETARY TO MOLEX INCORPORATED AND SHOULD NOT BE USED WITHOUT WRITTEN PERMISSION

MATERIAL NUMBER	ENGINEERING NUMBER	FINISH	CARRIER
190220123	MCT-17SN	TIN PLATING	LOOSE PIECE
190220124	MCT-17SNT		TAPE MOUNTED

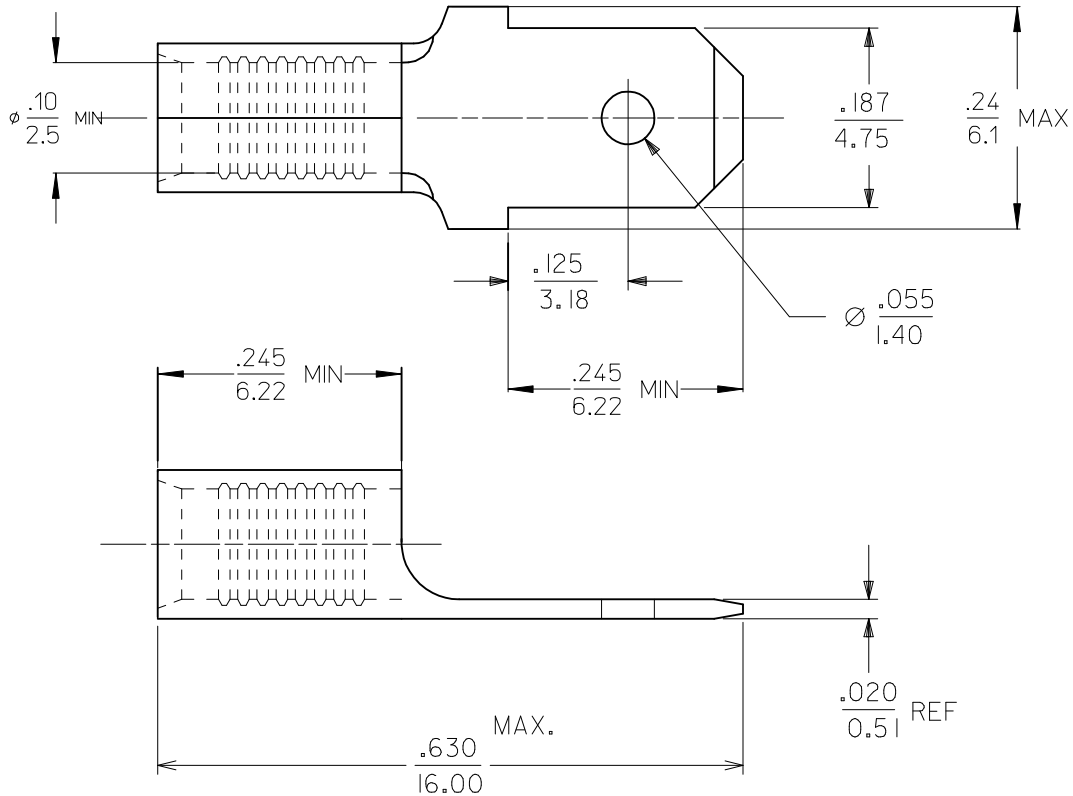

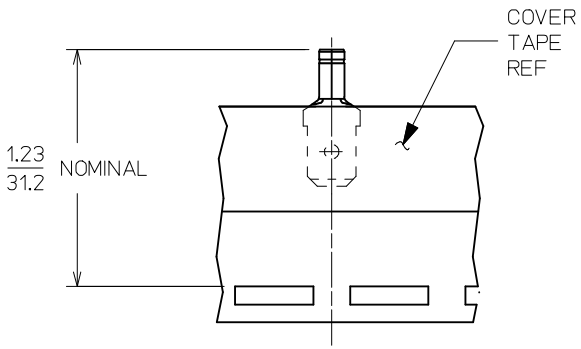

190220124 (MCT-17SNT)
PARTS ON TAPE

NOTES:
1. MATERIAL: BRASS
2. FINISH: SEE CHART
3. WIRE SIZE: 16-14 AWG (1.23-1.94 mm²)
4. TAB DIMENSIONS CONFORM TO UL310 SPECIFICATIONS.
5. PART IS ROHS COMPLIANT.

RELEASE TO PROD.
EC NO: IPG2017-0615
DRWN: DMYRICK 2016/12/20
CHKD:
APPR: JMACNEIL 2016/12/20
DESCRIPTION
A
REV

QUALITY SYMBOLS
=0
=0
=0

GENERAL TOLERANCES (UNLESS SPECIFIED)

	mm	INCH
4 PLACES	± ---	± ---
3 PLACES	± ---	± .005
2 PLACES	± 0.13	± .01
1 PLACE	± 0.25	± ---
0 PLACE	± ---	± ---

ANGULAR ± 1 °
DRAFT WHERE APPLICABLE MUST REMAIN WITHIN DIMENSIONS

DIMENSION STYLE: IN/MM
SCALE: 10:1
DESIGN UNITS: INCH
THIRD ANGLE PROJECTION

DRAWN BY: DMYRICK DATE: 2016/12/20
CHECKED BY: DATE:
APPROVED BY: JMACNEIL DATE: 2016/12/20
MATERIAL NO.: SEE CHART

TITLE: MALE CONNECTOR TERMINAL LONG BARREL .187" X .020", 16-14 AWG

molex

DOCUMENT NO.: SD-19022-020
SHEET NO.: 1 OF 1
SIZE: C

THIS DRAWING CONTAINS INFORMATION THAT IS PROPRIETARY TO MOLEX INCORPORATED AND SHOULD NOT BE USED WITHOUT WRITTEN PERMISSION