LOOSE PIECE		TAPE MOUNTED		SPECIFICATIONS						
MATERIAL NUMBER	ENGINEERING NUMBER	MATERIAL NUMBER	ENGINEERING NUMBER	STUD SIZE	"S" ±.005 [0.13]	"W" ±.010 [0.25]	"C" MIN.	"L" MAX.	"H"	STOCK ±.001 [0.025] THICKNESS
190560055	B-318-14	---	---	14	.265 [6.73]	.534 [13.56]	.554 [14.07]	1.115 [28.32]	---	.031 [0.79]
190560057	B-318-38	---	---	38	.390 [9.91]					
190560059	B-318-56	---	---	56	.328 [8.33]					
190560063	B-323-04	---	---	4	.119 [3.02]	.250 [6.35]	.209 [5.31]	.639 [16.23]	.980 [24.89]	.031 [0.79]
190560065	B-323-06	190560067	B-323-06T	6	.146 [3.71]					
190560068	B-323-08	---	---	8	.173 [4.39]					
190560070	B-325-10	---	---	10	.198 [5.03]	.467 [11.86]	.388 [9.86]	.916 [23.27]	.980 [24.89]	.031 [0.79]
190560072	B-325-14	---	---	14	.265 [6.73]					
190560075	B-325-56	---	---	56	.328 [8.33]					
190560102	B-337-04	---	---	4	.119 [3.02]	.312 [7.92]	.285 [7.24]	.730 [18.54]	.980 [24.89]	.031 [0.79]
190560104	B-337-06	---	---	6	.146 [3.71]					
190560106	B-337-08	---	---	8	.173 [4.39]					
190560109	B-337-10	---	---	10	.198 [5.03]					
190560114	B-339-06	---	---	6	.146 [3.71]	.342 [8.69]	.310 [7.87]	.775 [19.69]	---	.031 [0.79]
190560116	B-339-08	---	---	8	.173 [4.39]					
190560118	B-339-10	---	---	10	.198 [5.03]					

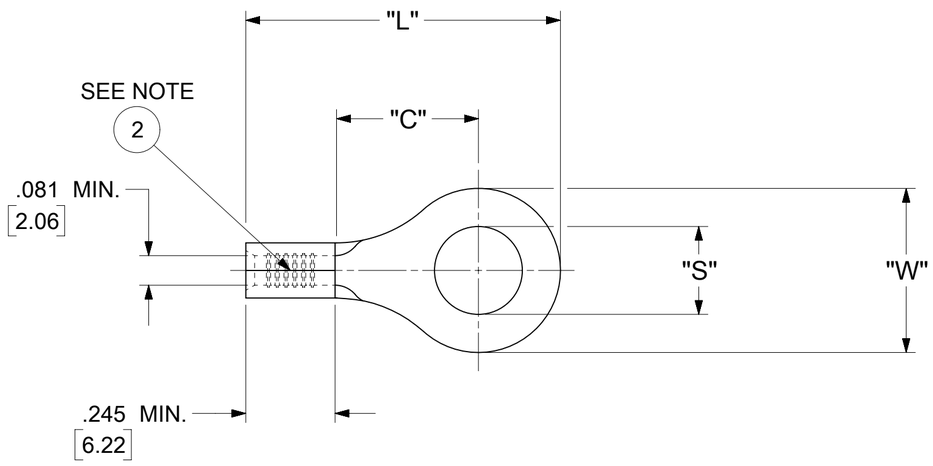

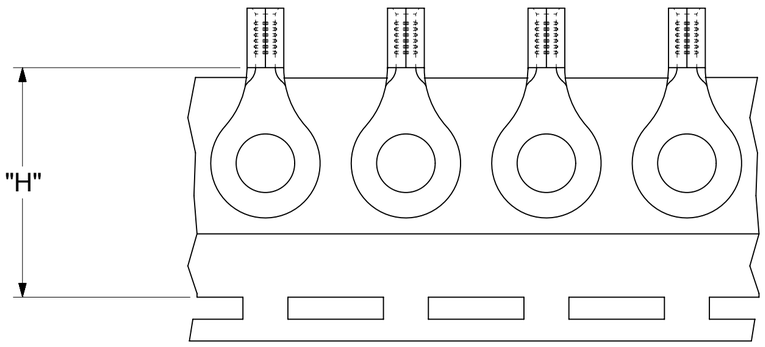

PARTS ON TAPE

NOTES:

1. MATERIAL: COPPER
   PLATING: ELECTRO-TIN (.0003 MIN).
2. BRAZED SEAM
3. WIRE SIZE: 16-14 AWG
   1.0-2.5 MM^2
4. ALL DIMENSIONS IN INCHES/[MM].
5. PARTS ARE ROHS COMPLIANT.
6. DIMS. SHOWN ARE FOR REFERENCE ONLY.

DOCUMENT STATUS	P1	RELEASE DATE	2023/10/13 08:25:58

THIS DRAWING CONTAINS INFORMATION THAT IS PROPRIETARY TO MOLEX ELECTRONIC TECHNOLOGIES, LLC AND SHOULD NOT BE USED WITHOUT WRITTEN PERMISSION

DIMENSION UNITS	SCALE
INCH/mm	NTS

GENERAL TOLERANCES (UNLESS SPECIFIED)

	MM	INCH
4 PLACES	±	±
3 PLACES	±	± 0.005
2 PLACES	± 0.13	± 0.01
1 PLACE	± 0.25	±
0 PLACES	±	±
ANGULAR TOL	± 0.5 °	

DRAFT WHERE APPLICABLE MUST REMAIN WITHIN DIMENSIONS

CURRENT REV DESC: REMOVED OBSOLETED PART NUMBERS AS PER PCN#512606.

EC NO: 764691

DRWN:	RAVINR1	2023/08/31
CHK'D:	GGA	2023/10/13
APPR:	GGA	2023/10/13

INITIAL REVISION:

DRWN:	JJ	1984/11/28
APPR:	JMACNEIL	2019/08/05

THIRD ANGLE PROJECTION | DRAWING: C-SIZE | SERIES: 19056

molex

RING TONGUE TERMINAL
VERSAKRIMP 300-SERIES

PRODUCT CUSTOMER DRAWING

DOCUMENT NUMBER	DOC TYPE	DOC PART	REVISION
190560053	PSD	000	A1

MATERIAL NUMBER	CUSTOMER	SHEET NUMBER
SEE TABLE	GENERAL MARKET	1 OF 1

FORMAT: Eng-lega-master-tb-prod-C
REVISION: E1
DATE: 2021/05/01

FILE NO. B-CD-301-01

NOTES:

① MAT'L: COPPER (STOCK TKN. $\frac{.031}{.79}^{\pm.001}$)
PLATING: ELECTRO-TIN (.0003 MIN.)

② BRAZED SEAM

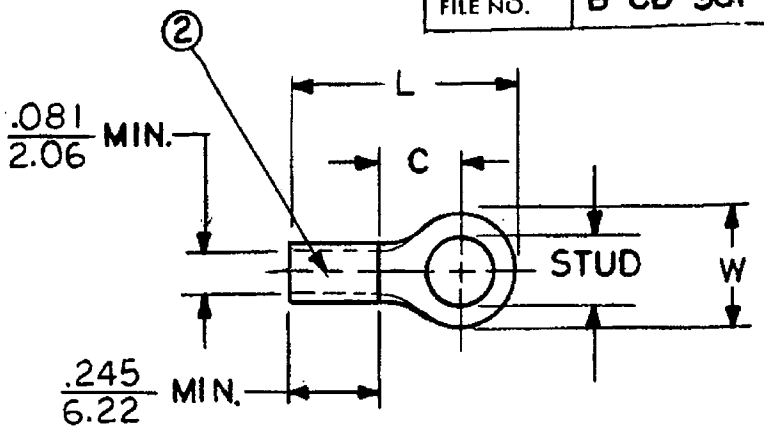

STUD SIZES: (±.005)

02 = .094
04 = .119
06 = .146
08 = .173
10 = .198
14 = .265
56 = .328
38 = .390

"UL" LISTING # E32244
"CSA" LISTING # 18689

ALL DIMENSIONS = INCHES / MM

WIRE SIZE: 16-14 AWG / 1.0-2.5 MM²

PART NUMBER	"W" ±.010	"C" MIN.	"L" MAX.				AVAILABLE STUD SIZES	
B-318-	.534 / 13.56	.554 / 14.07	1.115 / 28.32				10, 14, 56, 38	
B-323-	.250 / 6.35	.209 / 5.31	.639 / 16.23				02, 04, 06, 08	
B-325-	.467 / 11.86	.388 / 9.86	.916 / 23.27				10, 14, 56	
B-337-	.312 / 7.92	.285 / 7.24	.730 / 18.54				04, 06, 08, 10	
B-339-	.342 / 8.69	.310 / 7.87	.775 / 19.69				04, 06, 08, 10	

DIMENSIONAL TOLERANCES UNLESS OTHERWISE SPECIFIED			REFERENCE	SCALE: NTS	DATE
				DRWN. BY: JJ	11-28-84
FRAC.	DEC.	ANG.		CHKD. BY: GZ	11-30-84
±	±	±		APPRD. BY:	

TITLE: RING TONGUE TERMINAL VERSAKRIMP 300-SERIES

ETC molex INCORPORATED

DWG. NO. A CUSTOMER DWG.