LOOSE PIECE		TAPE MOUNTED		SPECIFICATIONS					
MATERIAL NUMBER	ENGINEERING NUMBER	MATERIAL NUMBER	ENGINEERING NUMBER	STUD SIZE	"S" ±.005 [0.13]	"W" ±.010 [0.25]	"C" MIN.	"L" MAX.	"H"
190560079	B-328-06HD	---	---	6	.146 [3.71]	.375 [9.53]	.303 [7.70]	.785 [19.94]	---
190560081	B-328-08HD	---	---	8	.173 [4.39]				
190560083	B-328-10HD	---	---	10	.198 [5.03]				
190560085	B-330-10HD	---	---	10	.198 [5.03]	.530 [13.46]	.393 [9.98]	.952 [24.18]	---
190560087	B-330-14HD	---	---	14	.265 [6.73]				
190560089	B-330-56HD	---	---	56	.328 [8.33]				
190560125	B-340-38HD	190560126	B-340-38HDT	38	.390 [9.91]	.592 [15.04]	.466 [11.84]	1.056 [26.82]	1.426 [36.22]

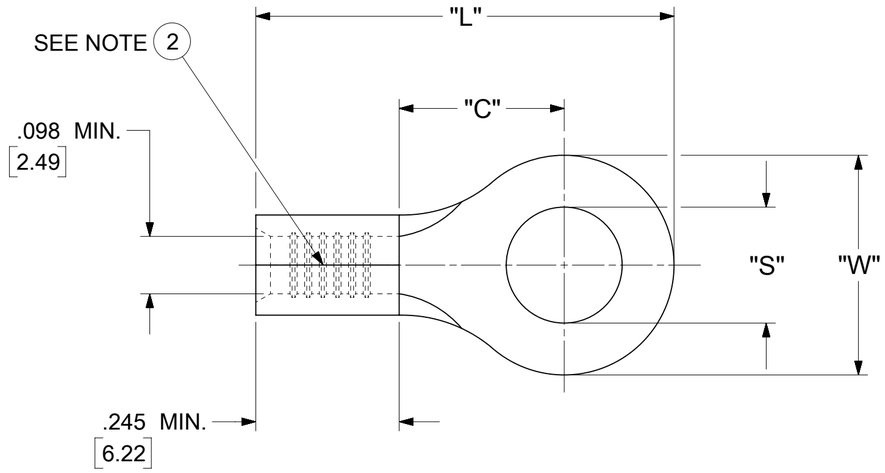

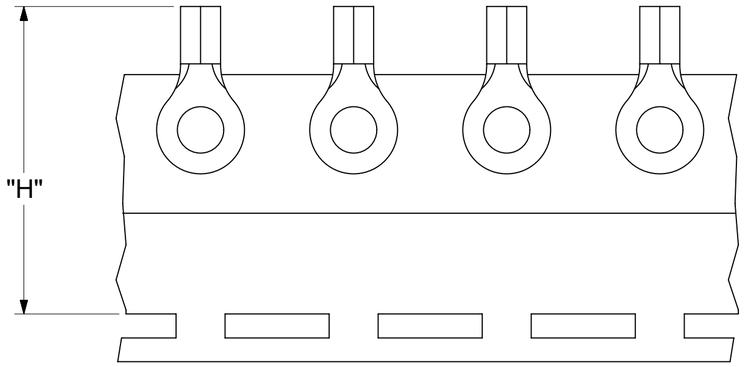

PARTS ON TAPE

NOTES:

1. MATERIAL: COPPER (STOCK THICKNESS .050±.001 [1.27])
   PLATING: ELECTRO-TIN (.0003 MIN).
2. BRAZED SEAM.
3. WIRE SIZE: 16 - 14 AWG
   1.0 - 2.5 MM²
4. "UL" LISTING #E32244
   "CSA" LISTING #18689
5. ALL DIMENSIONS IN INCHES/[MM].
6. PARTS ARE ROHS COMPLIANT.
7. DIMS. SHOWN ARE FOR REFERENCE ONLY.

THIS DRAWING CONTAINS INFORMATION THAT IS PROPRIETARY TO MOLEX ELECTRONIC TECHNOLOGIES, LLC AND SHOULD NOT BE USED WITHOUT WRITTEN PERMISSION

SYMBOLS: FA = 0, FC = 0, FP = 0, S = 0, ▼ = 0, C = 0, ☒ = 0, ■ = 0, C = 0

DIMENSION UNITS: INCH/MM
SCALE: NTS

GENERAL TOLERANCES (UNLESS SPECIFIED)

	MM	INCH
4 PLACES	± ---	± ---
3 PLACES	± ---	± 0.005
2 PLACES	± 0.13	± 0.01
1 PLACE	± 0.25	± ---
0 PLACES	± ---	± ---
ANGULAR TOL	± 0.5°	

DRAFT WHERE APPLICABLE MUST REMAIN WITHIN DIMENSIONS

CURRENT REV DESC:

EC NO: 625846
DRWN: ABENJAMINLW 2019/09/20
CHK'D: GROJAS01 2019/10/17
APPR: JMACNEIL 2019/10/18

INITIAL REVISION:
DRWN: JJ 1984/11/28
APPR:

THIRD ANGLE PROJECTION | DRAWING: C-SIZE | SERIES: 19056

molex

RING TONGUE HEAVY DUTY
TERMINAL VERSAKRIMP 300-SERIES

PRODUCT CUSTOMER DRAWING

DOCUMENT NUMBER	DOC TYPE	DOC PART	REVISION
BHDCD30101	PSD	001	A1

MATERIAL NUMBER	CUSTOMER	SHEET NUMBER
SEE TABLE	GENERAL MARKET	1 OF 1

DOCUMENT STATUS	P1	RELEASE DATE	2019/10/18 22:51:52

FORMAT: Eng-lega-master-tb-prod-C
REVISION: D
DATE: 2018/01/18