MAT'L NO (LOOSE PC)	ENG NO (LOOSE PC)	MAT'L NO (ON TAPE)	ENG NO (ON TAPE)	STUD SIZE	∅"S"	∅"W" MAX	"A" MIN	"L" MAX
191930143	D-350-06	-	-	6	.146 (3.71)	.483 (12.27)	.368 (9.35)	.977 (24.82)
191930146	D-350-08	191930148	D-350-08T	8	.173 (4.39)			
191930149	D-350-10	191930151	D-350-10T	10	.198 (5.03)			
191930152	D-350-14	191930155	D-350-14T	1/4	.265 (6.73)			
191930157	D-350-56	191930158	D-350-56T	5/16	.328 (8.33)			
191930159	D-351-10	-	-	10	.198 (5.03)	.603 (15.32)	.433 (11.00)	1.102 (27.99)
191930163	D-351-14	191930166	D-351-14T	1/4	.265 (6.73)			
191930171	D-351-56	191930174	D-351-56T	5/16	.328 (8.33)			
191930167	D-351-38	191930170	D-351-38T	3/8	.390 (9.91)			
191930175	D-351-76	-	-	7/16	.453 (11.51)			
191930194	D-353-56	-	-	5/16	.328 (8.33)	1.140 (28.96)	.993 (25.22)	1.938 (49.23)
191930193	D-353-38	-	-	3/8	.390 (9.91)			
191930196	D-353-76	-	-	7/16	.453 (11.51)			
191930190	D-353-12	-	-	1/2	.515 (13.08)			
191930195	D-353-58	-	-	5/8	.656 (16.66)			
191930192	D-353-34	-	-	3/4	.781 (19.84)			
191930198	D-356-06	191930199	D-356-06T	6	.146 (3.71)	.389 (9.88)	.368 (9.35)	.930 (23.62)
191930200	D-356-08	191930201	D-356-08T	8	.173 (4.39)			
191930202	D-356-10	191930203	D-356-10T	10	.198 (5.03)			
191930204	D-356-14	191930205	D-356-14T	1/4	.265 (6.73)			

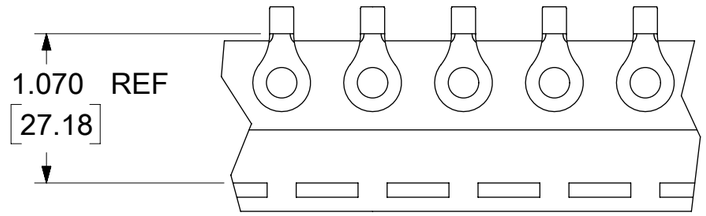

PARTS ON TAPE

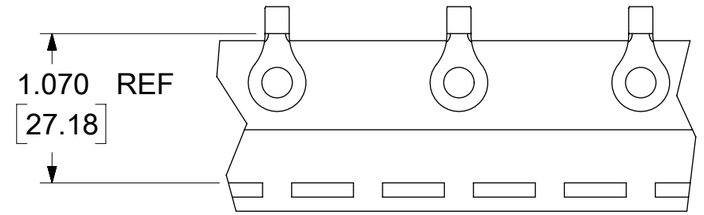

OPTIONAL DOUBLE SPACED

191930156 (D-350-14TD)

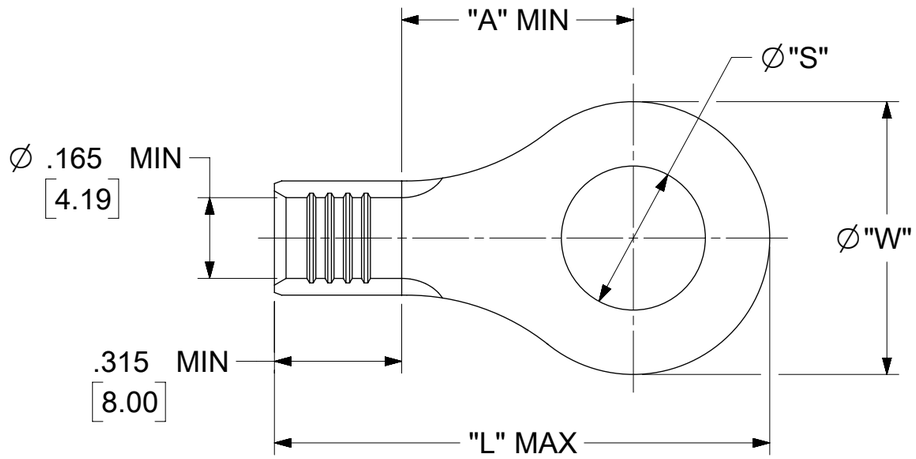

NOTES:
1. MATERIAL: TIN PLATED COPPER.
2. MUST BE RoHS COMPLIANT.

THIS DRAWING CONTAINS INFORMATION THAT IS PROPRIETARY TO MOLEX ELECTRONIC TECHNOLOGIES, LLC AND SHOULD NOT BE USED WITHOUT WRITTEN PERMISSION

DIMENSION UNITS	SCALE
IN/MM	NTS

GENERAL TOLERANCES (UNLESS SPECIFIED)

	MM	INCH
4 PLACES	±	±
3 PLACES	±	± 0.005
2 PLACES	± 0.13	± 0.01
1 PLACE	± 0.25	±
0 PLACES	±	±
ANGULAR TOL	± 0.5 °	

DRAFT WHERE APPLICABLE MUST REMAIN WITHIN DIMENSIONS

CURRENT REV DESC: ADDED D-351, D-353, AND D-356 PN'S

EC NO:	821384	
DRWN:	DEANNM1	2025/05/06
CHK'D:	ETHRODAHL	2025/05/08
APPR:	ETHRODAHL	2025/05/08
INITIAL REVISION:		
DRWN:	EDB	2001/01/23
APPR:	HEB	2001/01/23

THIRD ANGLE PROJECTION

molex

RING TONGUE TERMINAL
8 AWG, BRAZED SEAM

PRODUCT CUSTOMER DRAWING

DOCUMENT NUMBER	DOC TYPE	DOC PART	REVISION
SD-19193-016	PSD	001	C

DRAWING	SERIES	MATERIAL NUMBER	CUSTOMER	SHEET NUMBER
B-SIZE	19193	SEE CHART	GENERAL MARKET	1 OF 1

DOCUMENT STATUS	P1	RELEASE DATE	2025/05/08 16:33:49

FORMAT: Eng-lega-master-tb-prod-B
REVISION: D
DATE: 2018/01/18