MATERIAL NO. LOOSE PIECE	ENG. NO.	STUD SIZE	±.003 "S"	STOCK THICKNESS
191930342	J-385-14	1/4	.265	.083 (2.11)
191930346	J-385-56	5/16	.328	
191930345	J-385-38	3/8	.390	
191930348	J-385-76	7/16	.453	
191930341	J-385-12	1/2	.515	

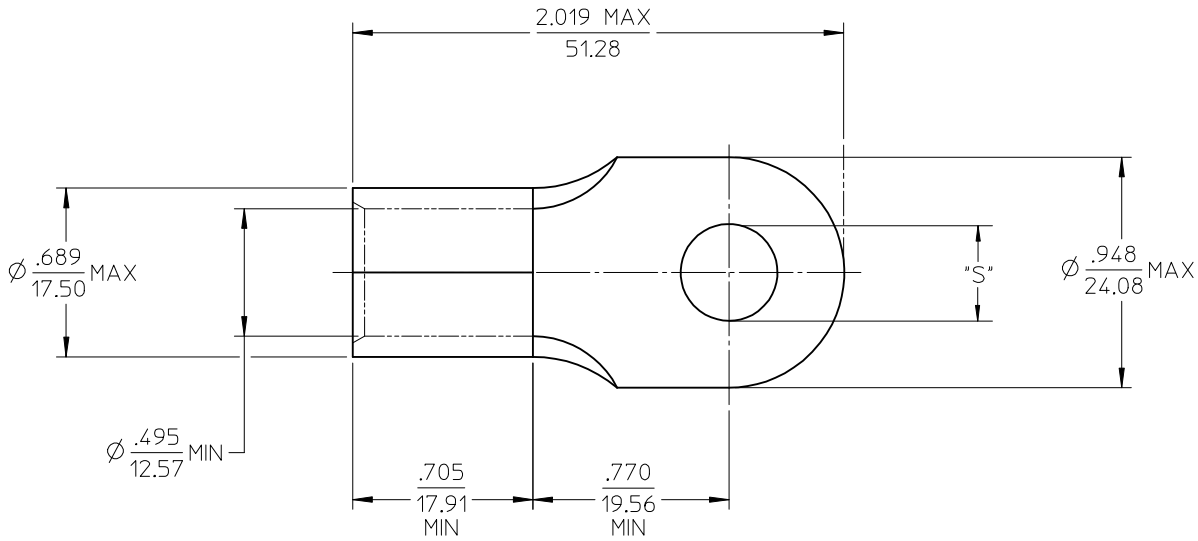

SALES DRAWING

NOTE(S):
1. MATERIAL: COPPER
2. PLATING: ELECTROPLATE TIN
3. ALL DIMENSIONS IN INCHES/(MM).
4. WIRE SIZE: 2/0 AWG
   70 MM²

REVISED/UPDATE TO MX STDS
EC NO: ETC2003-0315 2003/08/20
DRWN:DMYRICK 2003/08/21
CHKD:HEB
APPR:RDEROSS 2003/08/21
DESCRIPTION
B
REV

QUALITY SYMBOLS
▼- 0
Ⓒ- 0

GENERAL TOLERANCES (UNLESS SPECIFIED)

	mm	INCH
4 PLACES	± ---	± ---
3 PLACES	± ---	± .005
2 PLACES	± 0.13	± .01
1 PLACE	± 0.25	± ---
ANGULAR ±1/2°		

DRAFT WHERE APPLICABLE
MUST REMAIN
WITHIN DIMENSIONS

SCALE 2:1
DESIGN UNITS INCH
DIMENSION STYLE IN/MM
THIRD ANGLE PROJECTION
REVISE ON CAD ONLY
DRAWN BY DLM DATE 03/06/13
CHECKED BY HEB DATE 03/06/13
APPROVED BY RWD DATE 03/06/13

TITLE
RING TONGUE TERMINAL
VERSAKRIMP
2/0 AWG

MOLEX INCORPORATED
MATERIAL NO. (SEE CHART)
DOCUMENT NO. SD-19193-009
SHEET NO. 1 OF 1

THIS DRAWING CONTAINS INFORMATION THAT IS PROPRIETARY TO MOLEX INCORPORATED AND SHOULD NOT BE USED WITHOUT WRITTEN PERMISSION
B