DRWG. NO. CDK390

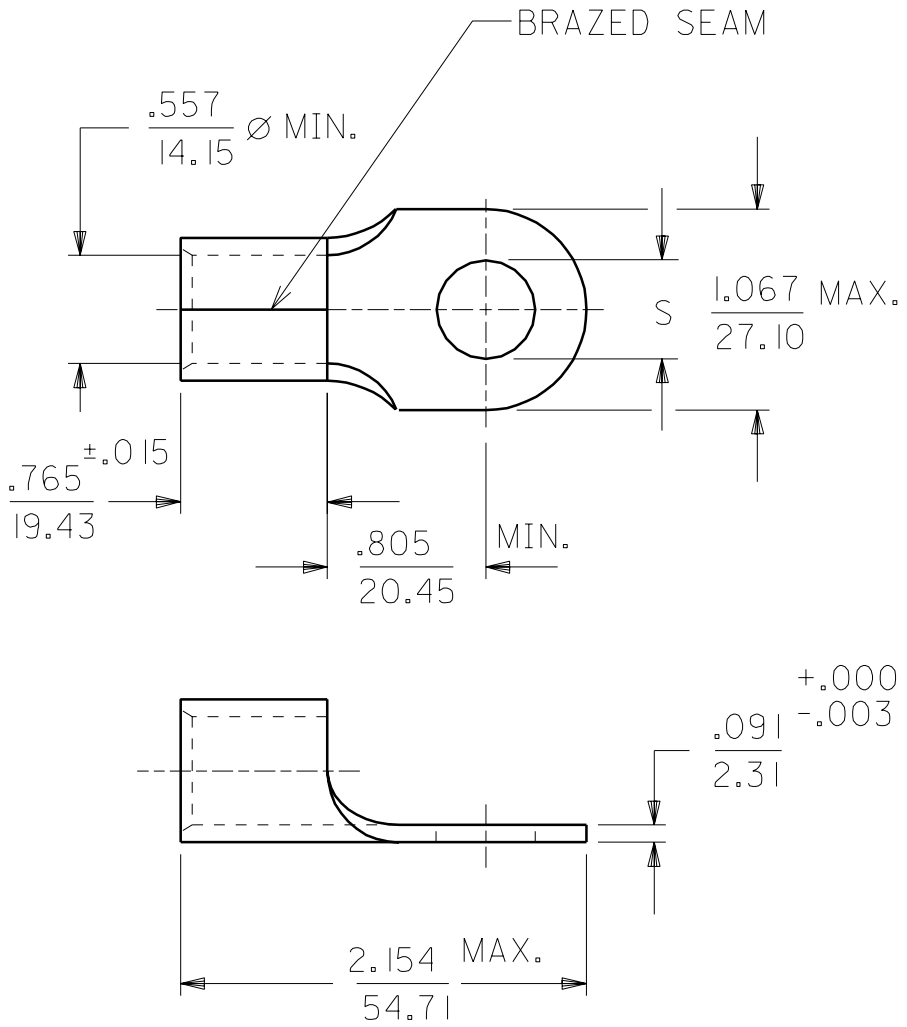

MATERIAL: COPPER
PLATING: TIN

PART NO.	STUD SIZE	±.003 "S"
K-390-56	5/16	.328
K-390-38	3/8	.390
K-390-76	7/16	.453
K-390-12	1/2	.515
K-390-58	5/8	.656
K-390-34	3/4	.781

WIRE SIZE: 3/0 AWG
95 MM ^{2}

REVISE ONLY ON CAD SYSTEM

TITLE
RING TONGUE TERMINAL
VERSAKRIMP
3/0 AWG

DRWG. BY	EMF
CHK'D. BY	JM
APP'D. BY	FP
SCALE	1: 1

molex ETC INC.
PINELLAS PARK, FLA. 34665 U.S.A.

SHEET NO.

DATE 12/01/93

PART NO. SEE CHART

DRWG. NO. CDK390

FILE NAME CDK390

THIS DRAWING CONTAINS INFORMATION THAT IS PROPRIETARY TO MOLEX-ETC INC. AND SHOULD NOT BE USED WITHOUT WRITTEN PERMISSION.

DIV.

SIZE A