Printed-circuit board connector - FKIC 2,5/ 3-ST-5,08-RN - 1925870

Please be informed that the data shown in this PDF Document is generated from our Online Catalog. Please find the complete data in the user's documentation. Our General Terms of Use for Downloads are valid (http://phoenixcontact.com/download)

Plug component, Nominal current: 12 A, Rated voltage (III/2): 320 V, Number of positions: 3, Pitch: 5.08 mm, Connection method: Spring-cage connection, Color: green, Contact surface: Tin, Article with engagement nose



The figure shows a 10-position version of the product

Product Features

- Can be combined with inverted base strips and plugs for shock-proof applications
- Plug with inverted contact system (pin contact)
- SK 5/3,8 or SK 5,08/3,8 marker cards

Key commercial data

Packing unit	1 pc
Minimum order quantity	50 pc
Weight per Piece (excluding packing)	5.37 GRM
Custom tariff number	85366990
Country of origin	Germany

Technical data

Dimensions

Pitch	5.08 mm
Dimension a	10.16 mm

General

Range of articles	FKIC 2,5/..-ST-RN
Insulating material group	I
Rated surge voltage (III/3)	4 kV
Rated surge voltage (III/2)	4 kV
Rated surge voltage (II/2)	4 kV
Rated voltage (III/3)	320 V

Printed-circuit board connector - FKIC 2,5/ 3-ST-5,08-RN - 1925870

Technical data

General

Rated voltage (III/2)	320 V
Rated voltage (II/2)	630 V
Connection in acc. with standard	EN-VDE
Nominal current I_N	12 A
Nominal cross section	2.5 mm²
Maximum load current	12 A
Insulating material	PA
Inflammability class according to UL 94	V0
Internal cylindrical gage	A2
Stripping length	10 mm
Number of positions	3

Connection data

Conductor cross section solid min.	0.2 mm²
Conductor cross section solid max.	2.5 mm²
Conductor cross section stranded min.	0.2 mm²
Conductor cross section stranded max.	2.5 mm²
Conductor cross section stranded, with ferrule without plastic sleeve min.	0.25 mm²
Conductor cross section stranded, with ferrule without plastic sleeve max.	2.5 mm²
Conductor cross section stranded, with ferrule with plastic sleeve min.	0.25 mm²
Conductor cross section stranded, with ferrule with plastic sleeve max.	2.5 mm²
Conductor cross section AWG/kcmil min.	24
Conductor cross section AWG/kcmil max	12
2 conductors with same cross section, stranded, TWIN ferrules with plastic sleeve, min.	0.5 mm²
2 conductors with same cross section, stranded, TWIN ferrules with plastic sleeve, max.	1 mm²
Minimum AWG according to UL/CUL	26
Maximum AWG according to UL/CUL	12

Classifications

eCl@ss

eCl@ss 4.0	272607xx
eCl@ss 4.1	27260701
eCl@ss 5.0	27260701
eCl@ss 5.1	27260701
eCl@ss 6.0	27260704

Printed-circuit board connector - FKIC 2,5/ 3-ST-5,08-RN - 1925870

Classifications

eCl@ss

eCl@ss 7.0	27440402
eCl@ss 8.0	27440309

ETIM

ETIM 3.0	EC001121
ETIM 4.0	EC002638
ETIM 5.0	EC002638

UNSPSC

UNSPSC 6.01	30211810
UNSPSC 7.0901	39121409
UNSPSC 11	39121409
UNSPSC 12.01	39121409
UNSPSC 13.2	39121409

Approvals

Approvals

Approvals

UL Recognized / VDE Gutachten mit Fertigungsüberwachung / cUL Recognized / GOST / IECEE CB Scheme / GOST / cUL Recognized / CCA / cULus Recognized

Ex Approvals

Approvals submitted

Approval details

UL Recognized

	B	D
mm²/AWG/kcmil	26-12	26-12
Nominal current IN	10 A	10 A
Nominal voltage UN	300 V	300 V

Printed-circuit board connector - FKIC 2,5/ 3-ST-5,08-RN - 1925870

Approvals

VDE Gutachten mit Fertigungsüberwachung

mm²/AWG/kcmil	0.2-2.5
Nominal current IN	12 A
Nominal voltage UN	250 V

cUL Recognized

	B	D
mm²/AWG/kcmil	26-12	26-12
Nominal current IN	10 A	10 A
Nominal voltage UN	300 V	300 V

GOST

IECEE CB Scheme

mm²/AWG/kcmil	0.2-2.5
Nominal current IN	12 A
Nominal voltage UN	250 V

GOST

cUL Recognized

	B	D
mm²/AWG/kcmil	26-12	26-12
Nominal current IN	10 A	10 A
Nominal voltage UN	250 V	300 V

Printed-circuit board connector - FKIC 2,5/ 3-ST-5,08-RN - 1925870

Approvals

CCA	
mm²/AWG/kcmil	0.2-2.5
Nominal current IN	12 A
Nominal voltage UN	250 V

cULus Recognized

Drawings

Dimensioned drawing

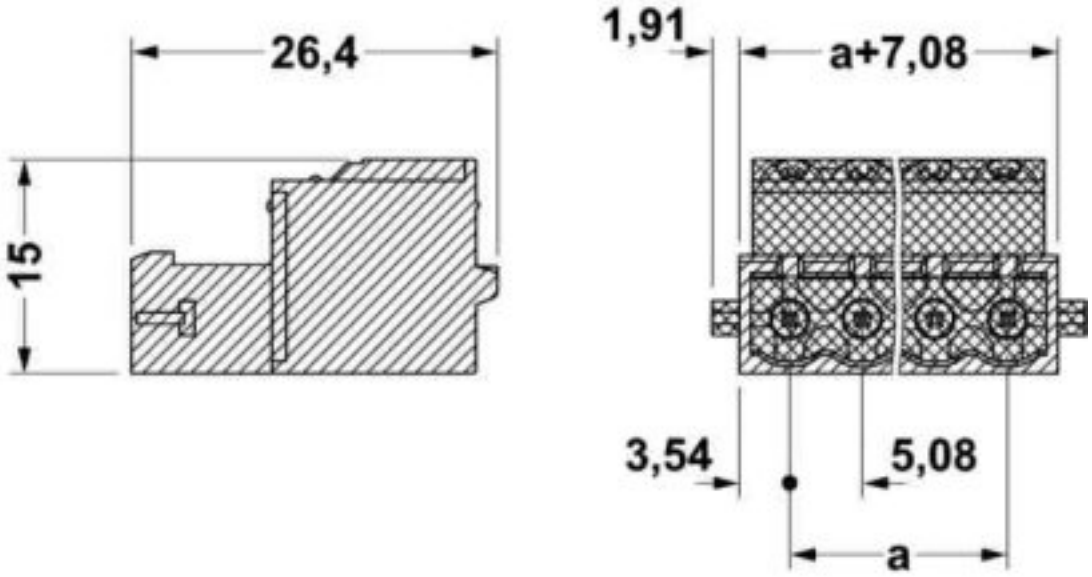

Phoenix Contact 2014 © - all rights reserved
http://www.phoenixcontact.com