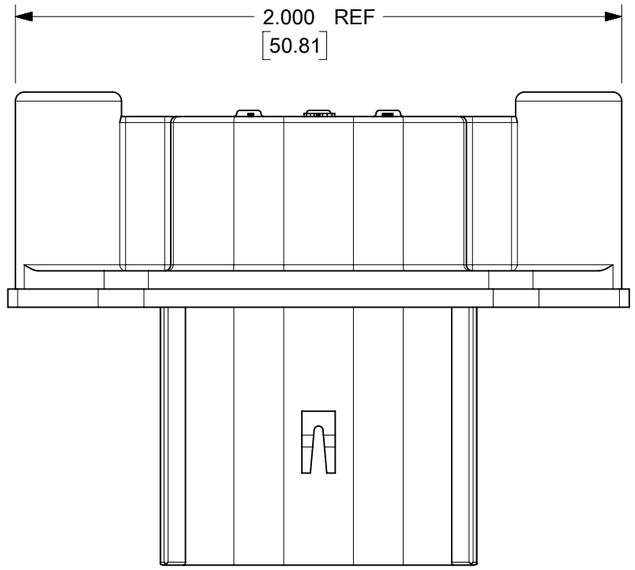

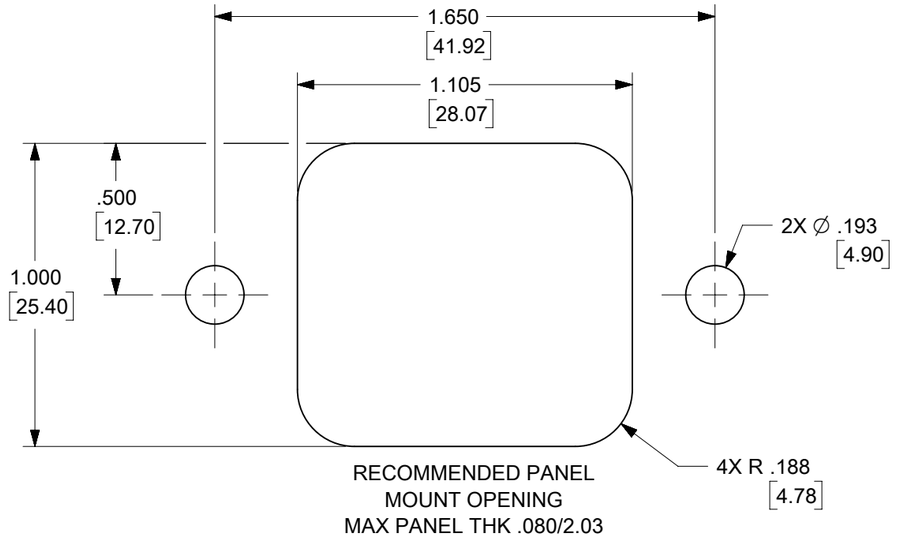

RECOMMENDED PANEL
MOUNT OPENING
MAX PANEL THK .080/2.03

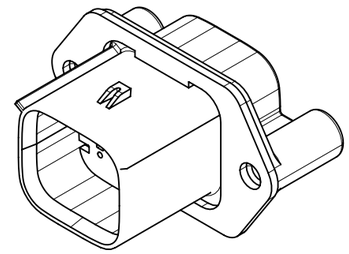

SCALE 1:1

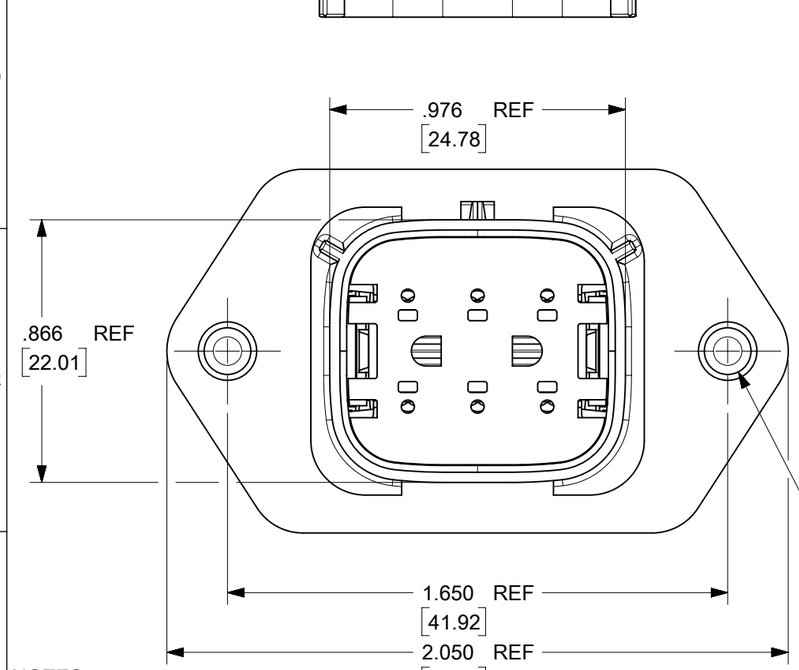

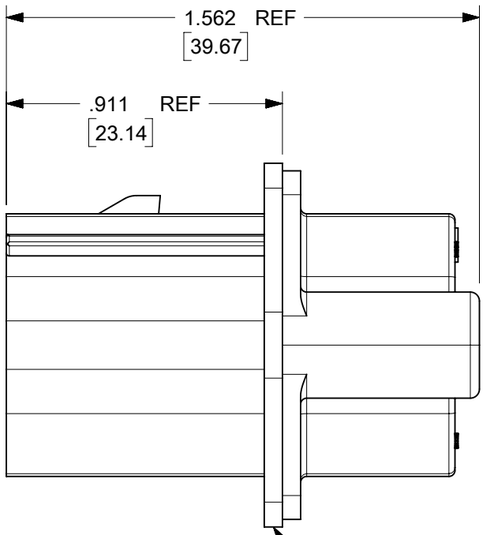

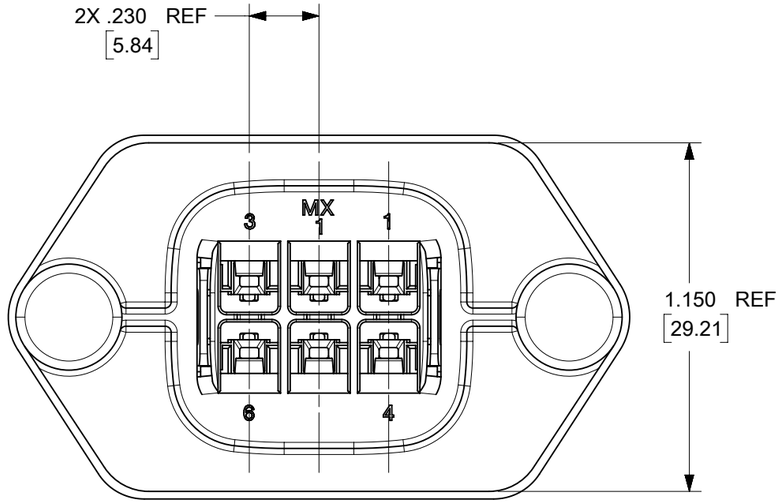

NOTES:
1. MATERIALS:
   HOUSING: SYNDIOTACTIC POLYSTYRENE (SPS), GLASS FILLED, UL94 V-0,COLOR: BLACK
   GASKET: EPDM RUBBER
2. PRODUCT SPECIFICATION: PS-19417-001.
3. PACKAGING SPECIFICATION: PK-19429-001.
   GASKETS, IF REQUIRED FOR THE ASSEMBLIES,ARE BULK PACKAGED IN A SEPARATE BAG.
4. MATES WITH: 19418 SERIES RECEPTACLE ASSEMBLIES.
5. USE CONNECTOR WITH MALE CRIMP TERMINAL: SERIES 19417.
6. RECOMMENDED MOUNTING HARDWARE: (2)#10 X .62/15.8 LONG
   PLASTIC THREAD CUTTING SCREWS. RECOMMENDED TORQUE 15-17 IN-LBS.
   SUGGESTED SOURCE: ITW SHAKEPROOF INDUSTRIAL BOSSCREW OR EQUIVALENT.
7. ASSEMBLY IS ROHS COMPLIANT.

194290036	YES
194290010	NO
MATERIAL NUMBER	GASKET

DOCUMENT STATUS	P1	RELEASE DATE	2022/01/06 14:54:29

THIS DRAWING CONTAINS INFORMATION THAT IS PROPRIETARY TO MOLEX ELECTRONIC TECHNOLOGIES, LLC AND SHOULD NOT BE USED WITHOUT WRITTEN PERMISSION

FUNCTIONAL SYMBOLS: EA = 0; EC = 0; EP = 0
DIVISIONAL SYMBOLS

DIMENSION UNITS: in/[mm] | SCALE: 2:1

GENERAL TOLERANCES (UNLESS SPECIFIED)

	MM	INCH
4 PLACES	±	±
3 PLACES	±	± 0.015
2 PLACES	± 0.38	±
1 PLACE	±	±
0 PLACES	±	±
ANGULAR TOL	± 1.0 °	

DRAFT WHERE APPLICABLE MUST REMAIN WITHIN DIMENSIONS

CURRENT REV DESC: REDRAWN IN NX & HSG
MATERIAL UPDATED

EC NO: 690910
DRWN: RMV02 2021/12/20
CHK'D: DMYRICK 2022/01/05
APPR: JMACNEIL 2022/01/06

INITIAL REVISION:
DRWN: DMYRICK 03/11/10
APPR: DTITUS 2010/10/18

THIRD ANGLE PROJECTION | DRAWING: B-SIZE | SERIES: 19429

molex

6 WAY PLUG PANEL MOUNT
ASSEMBLY 22-14 AWG

PRODUCT CUSTOMER DRAWING

DOCUMENT NUMBER	DOC TYPE	DOC PART	REVISION
SD-19429-003	PSD	001	D

MATERIAL NUMBER	CUSTOMER	SHEET NUMBER
SEE CHART	GENERAL MARKET	1 OF 1