MCP73837/8

Advanced Stand-Alone Li-Ion/Li-Polymer Battery Charge Management Controller with Autonomous AC Adapter or USB Port Source Selection

Features

- Highly Accurate Preset Voltage Regulation: ±0.5%
- Available Voltage Regulation Options:
  - 4.20V, 4.35V, 4.4V or 4.5V
- Complete Linear Charge Management Controller:
  - Autonomous Power Source Selection
  - Integrated Pass Transistors
  - Integrated Current Sense
  - Integrated Reverse Discharge Protection
- Constant Current (CC)/Constant Voltage (CV) Operation with Thermal Regulation
- Selectable USB Port Charge Current:
  - Low: 1 Unit Load
  - High: 5 Unit Loads
- Programmable AC Adapter Charge Current:
  - 15 mA – 1000 mA
- Two-Charge Status Outputs
- Power-Good Monitor: MCP73837
- Timer Enable: MCP73838
- Automatic Recharge:
  - Selectable Voltage Threshold
- Automatic End-of-Charge Control:
  - Selectable Charge Termination Current Ratio
  - Selectable Safety Timer Period
- Preconditioning of Deeply Depleted Cells – Can Be Disabled
- Battery Cell Temperature Monitor
- UVLO (Undervoltage Lockout)
- Automatic Power-Down When Input Power Is Removed
- Low-Dropout (LDO) Linear Regulator Mode
- Numerous Selectable Options Available for a Variety of Applications:
  - Refer to Section 1.0 “Electrical Characteristics” for Selectable Options
  - Refer to the “Product Identification System” for Standard Options
- Temperature Range: -40°C to 85°C
- Packaging:
  - 10-Lead 3 mm x 3 mm DFN
  - 10-Lead MSOP*

    * Consult the factory for MSOP availability.

Applications

- Smart Phones and Personal Data Assistants (PDA)
- Portable Media Players (PMP)
- Ultra Mobile Devices (UMD)
- Digital Cameras
- MP3 Players
- Bluetooth Headsets
- Handheld Medical Devices
- AC/USB Dual Source Li-Ion Battery Chargers

Description

The MCP73837 and MCP73838 devices are fully integrated linear Li-Ion/Li-Polymer battery chargers with autonomous power source selection. Along with its small physical size, the low number of external components required makes the MCP73837/8 ideally suitable for portable applications.

The MCP73837/8 automatically selects the USB port or AC adapter as the power source for the system. For the USB port powered systems, the MCP73837/8 specifically adheres to the current limits governed by the USB specification. The host microcontroller can select from two preset maximum charge current rates of 100 mA (low-power USB port) or 500 mA (high-power USB port). With an AC adapter providing power to the system, an external resistor sets the magnitude of the system or charge current up to a maximum of 1A.

The MCP73837/8 employs a constant current/constant voltage charge algorithm with selectable preconditioning and charge termination. The constant voltage regulation is fixed with four available options: 4.20V, 4.35V, 4.40V or 4.50V, to accommodate the new emerging battery charging requirements. The MCP73837/8 limits the charge current, based on die temperature, during high power or high ambient conditions. This thermal regulation optimizes the charge cycle time while maintaining the reliability of the device .

The MCP73837/8 are fully specified over the ambient temperature range of -40°C to +85°C.

The MCP73837/8 devices are available in either a 3 mm x 3 mm 10-lead DFN package or a 10-lead MSOP package.

© 2007-2015 Microchip Technology Inc.

Package Types

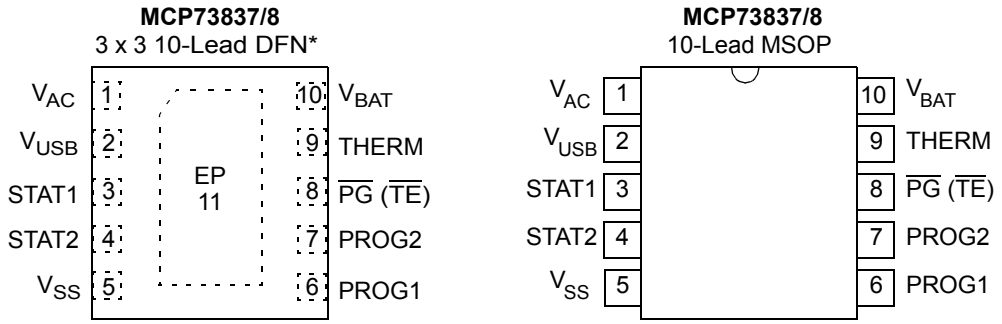

*Includes Exposed Thermal Pad (EP); see Table 3-1.

Typical Applications

MCP73837 Typical Application

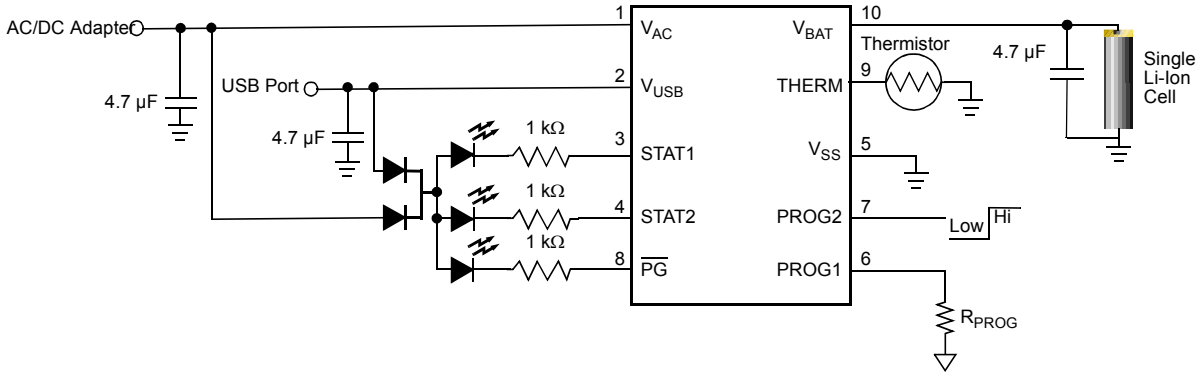

MCP73838 Typical Application

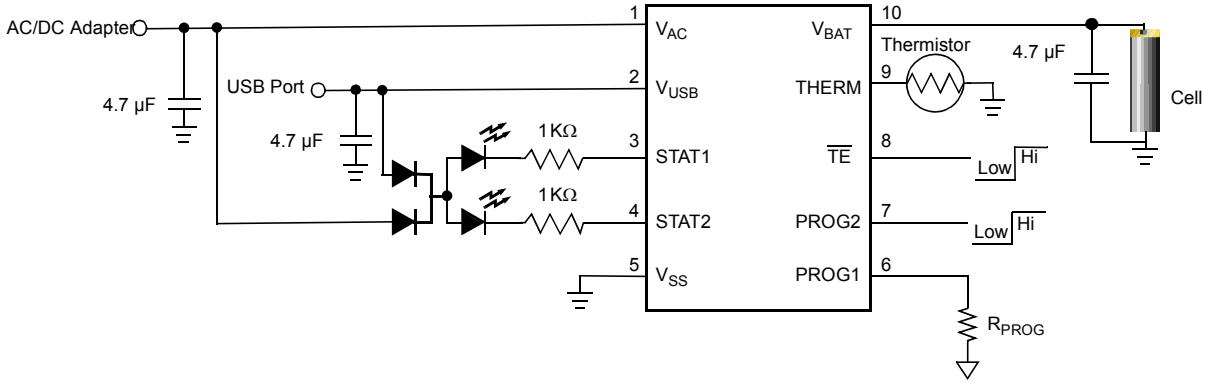

© 2007-2015 Microchip Technology Inc.

Functional Block Diagram (MCP73837/8)

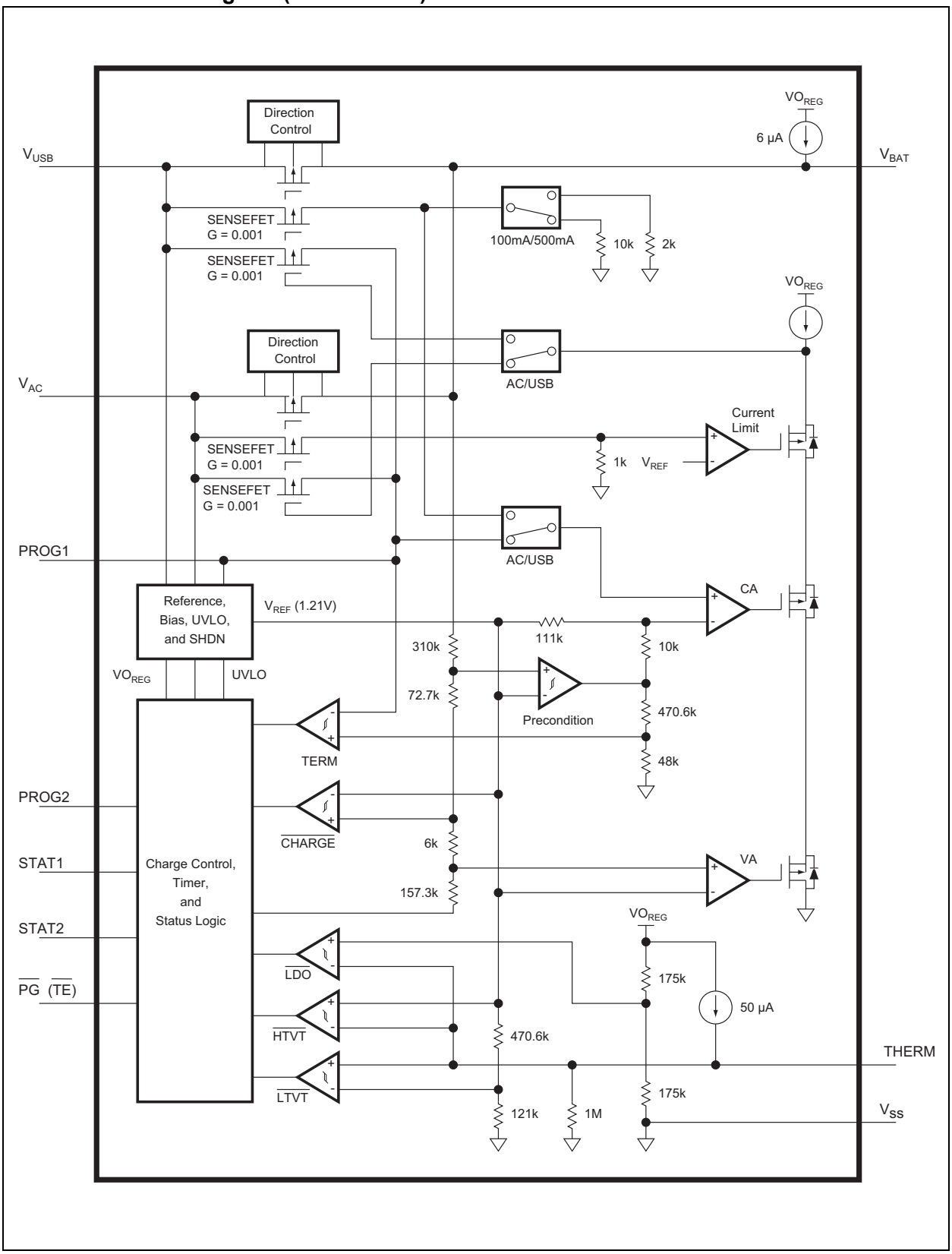

1.0 ELECTRICAL CHARACTERISTICS

Absolute Maximum Ratings†

V_{DDN}.....7.0V
All Inputs and Outputs w.r.t. V_{SS} ..... -0.3 to (V_{DD} + 0.3)V
Maximum Junction Temperature, T_J .....Internally Limited
Storage temperature .....-65°C to +150°C
ESD protection on all pins
Human Body Model (1.5 kΩ in Series with 100 pF).....≥ 4 kV
Machine Model (200 pF, No Series Resistance).....300V

† Notice: Stresses above those listed under "Maximum Ratings" may cause permanent damage to the device. This is a stress rating only and functional operation of the device at those or any other conditions above those indicated in the operational listings of this specification is not implied. Exposure to maximum rating conditions for extended periods may affect device reliability.

DC CHARACTERISTICS

Electrical Specifications: Unless otherwise indicated, all limits apply for V_{DD}= [V_{REG}(typical) + 0.3V] to 6V, T_A = -40°C to +85°C. Typical values are at +25°C, V_{DD} = [V_{REG} (typical) + 1.0V].

Parameters	Sym.	Min.	Typ.	Max.	Units	Conditions
Supply Input						
Supply Voltage	V_{DD}	V_{REG}(Typ) +0.3V	—	6	V	(1)
Supply Current	I_{SS}	—	1900	3000	µA	Charging
	—	—	110	300	µA	Charge Complete, No Battery
			75	100	µA	Standby (PROG Floating)
			0.6	5	µA	Shutdown ($V_{DD} \le V_{BAT}$ – 100 mV or $V_{DD} < V_{STOP}$)
UVLO Start Threshold	V_{START}	3.35	3.45	3.55	V	V_{DD} = Low to High (USB Port)
UVLO Stop Threshold	V_{STOP}	3.25	3.35	3.45	V	V_{DD} = High to Low (USB Port)
UVLO Hysteresis	V_{HYS}	—	75	—	mV	(USB Port)
UVLO Start Threshold	V_{START}	4.1	4.15	4.3	V	(AC Adapter)
UVLO Stop Threshold	V_{STOP}	4.0	4.1	4.2	V	(AC Adapter)
UVLO Hysteresis	V_{HYS}	—	55	—	mV	(AC Adapter)
Voltage Regulation (Constant Voltage Mode)						
Regulated Charge Voltage	V_{REG}	4.179	4.20	4.221	V	V_{DD} = [V_{REG}(typical) + 1V]
	—	4.328	4.35	4.372	V	I_{OUT} = 30 mA
		4.378	4.40	4.422	V	T_A = -5°C to +55°C
		4.477	4.50	4.523	V	
Regulated Charge Voltage Tolerance	V_{RTOL}	-0.5	—	+0.5	%	T_A = -5°C to +55°C
Line Regulation	$\lvert(\Delta V_{BAT}/V_{BAT})/\Delta V_{DD}\rvert$	—	0.075	0.2	%/V	V_{DD} = [V_{REG}(typical)+1V] to 6V I_{OUT} = 30 mA
Load Regulation	$\lvert\Delta V_{BAT}/V_{BAT}\rvert$	—	0.150	0.3	%	I_{OUT} = 10 mA to 100 mA V_{DD} = [V_{REG}(typical)+1V]
Supply Ripple Attenuation	PSRR	—	60	—	dB	I_{OUT} = 10 mA, 10Hz to 1 kHz
	—	—	52	—	dB	I_{OUT} = 10 mA, 10Hz to 10 kHz
		—	23	—	dB	I_{OUT} = 10 mA, 10Hz to 1 MHz
Current Regulation (Fast Charge Constant-Current Mode)						
AC Adapter Fast Charge Current	I_{REG}	95	105	115	mA	PROG1 = 10 kΩ
	—	900	1000	1100	mA	PROG1 = 1 kΩ, (2) T_A = -5°C to +55°C

Note 1: The supply voltage (V_{DD}) = V_{AC} when input power source is from AC adapter and the supply voltage (V_{DD}) = V_{USB} when input power source is from the USB port.
2: The value is guaranteed by design and not production tested.
3: The current is based on the ratio of selected current regulation (I_{REG}).
The maximum charge impedance has to be less than shutdown impedance for normal operation.

© 2007-2015 Microchip Technology Inc.

DC CHARACTERISTICS (Continued)

Electrical Specifications: Unless otherwise indicated, all limits apply for V_{DD}= [V_{REG}(typical) + 0.3V] to 6V, T_A = -40°C to +85°C. Typical values are at +25°C, V_{DD} = [V_{REG} (typical) + 1.0V].

Parameters	Sym.	Min.	Typ.	Max.	Units	Conditions
USB port Fast Charge Current	I_{REG}	80	90	100	mA	PROG2 = Low
	—	400	450	500	mA	PROG2 = High T_A = -5°C to +55°C
Maximum Output Current Limit	I_{MAX}	—	1200	—	mA	PROG1 < 833Ω
Precondition Current Regulation (Trickle Charge Constant-Current Mode)						
Precondition Current Ratio	I_{PREG}/I_{REG}	7.5	10	12.5	%	(3)
	—	15	20	25	%	T_A = -5°C to +55°C
		30	40	50	%	
		—	100	—	%	
Precondition Current Threshold Ratio	V_{PTH}/V_{REG}	64	66.5	69	%	V_{BAT} Low to High
	—	69	71.5	74	%	
Precondition Hysteresis	V_{PHYS}	—	120	—	mV	V_{BAT} High to Low
Charge Termination						
Charge Termination Current Ratio	I_{TERM}/I_{REG}	3.75	5	6.25	%	PROG1 = 1 kΩ to 10 kΩ
	—	5.6	7.5	9.4	%	T_A = -5°C to +55°C
		7.5	10	12.5	%	(3)
		15	20	25	%	
Automatic Recharge						
Recharge Voltage Threshold Ratio	V_{RTH}/V_{REG}	92	94.0	96	%	V_{BAT} High to Low
	—	95	97	99	%	T_A = -5°C to +55°C
Pass Transistor ON-Resistance						
ON-Resistance	R_{DSON}	—	350	—	mΩ	V_{DD} = 4.5V, T_J = +105°C
Battery Discharge Current						
Output Reverse Leakage Current	$I_{DISCHARGE}$	—	0.1	2	µA	Standby (PROG1 or PROG2 Floating)
	—	—	0.55	2	µA	Shutdown (V_{DD} ≤ V_{BAT} -100 mV or V_{DD} < V_{STOP})
		—	-6	-15	µA	Charge Complete
Status Indicators – STAT1, STAT2, PG (MCP73837)						
Sink Current	I_{SINK}	—	16	35	mA	
Low Output Voltage	V_{OL}	—	0.3	1	V	I_{SINK} = 4 mA
Input Leakage Current	I_{LK}	—	0.03	1	µA	High Impedance, V_{DD} on pin
PROG1 Input (PROG1)						
Charge Impedance Range	R_{PROG}	1	—	—	kΩ	(4)
Shutdown Impedance	R_{PROG}	70	—	200	kΩ	Minimum Impedance for Shutdown
PROG2 Inputs (PROG2)						
Input High Voltage Level	V_{IH}	0.8V_{DD}	—	—	%	
Input Low Voltage Level	V_{IL}	—	—	0.2V_{DD}	%	
Shutdown Voltage Level	V_{SD}	0.2V_{DD}	—	0.8V_{DD}	%	
Input Leakage Current	I_{LK}	—	7	15	µA	V_{PROG2} = V_{DD}

Note 1: The supply voltage (V_{DD}) = V_{AC} when input power source is from AC adapter and the supply voltage (V_{DD}) = V_{USB} when input power source is from the USB port.

2: The value is guaranteed by design and not production tested.

3: The current is based on the ratio of selected current regulation (I_{REG}).

The maximum charge impedance has to be less than shutdown impedance for normal operation.

DC CHARACTERISTICS (Continued)

Electrical Specifications: Unless otherwise indicated, all limits apply for V_{DD}= [V_{REG}(typical) + 0.3V] to 6V, T_A = -40°C to +85°C. Typical values are at +25°C, V_{DD} = [V_{REG} (typical) + 1.0V].

Parameters	Sym.	Min.	Typ.	Max.	Units	Conditions
Timer Enable (TE)						
Input High Voltage Level	V_{IH}	2	—	—	V	
Input Low Voltage Level	V_{IL}	—	—	0.8	V	
Input Leakage Current	**ILK**	—	0.01	1	µA	V_{TE} = V_{DD}
Thermistor Bias						
Thermistor Current Source	I_{THERM}	47	50	53	µA	2 kΩ < R_{THERM} < 50 kΩ
Thermistor Comparator						
Upper Trip Threshold	V_{T1}	1.20	1.23	1.26	V	V_{T1} Low to High
Upper Trip Point Hysteresis	V_{T1HYS}	—	-40	—	mV	
Lower Trip Threshold	V_{T2}	0.235	0.250	0.265	V	V_{T2} High to Low
Lower Trip Point Hysteresis	V_{T2HYS}	—	40	—	mV	
System Test (LDO) Mode						
Input High Voltage Level	V_{IH}	—	—	V_{DD} – 0.1	V	
THERM Input Sink Current	I_{SINK}	3	5.5	20	µA	Stand-by or System Test Mode
Bypass Capacitance	C_{BAT}	1 4.7	—	—	µF µF	I_{OUT} < 250 mA I_{OUT} > 250 mA
Automatic Power Down (SLEEP Comparator, Direction Control)						
Automatic Power Down Entry Threshold	V_{PD}	V_{BAT} + 10 mV	V_{BAT} + 100 mV	—	V	2.3V ≤ V_{BAT} ≤ V_{REG} V_{DD} Falling
Automatic Power Down Exit Threshold	V_{PDEXIT}	—	V_{BAT} + 150 mV	V_{BAT} + 250 mV	V	2.3V ≤ V_{BAT} ≤ V_{REG} V_{DD} Rising
Thermal Shutdown						
Die Temperature	T_{SD}	—	150	—	°C	
Die Temperature Hysteresis	T_{SDHYS}	—	10	—	°C	

Note 1: The supply voltage (V_{DD}) = V_{AC} when input power source is from AC adapter and the supply voltage (V_{DD}) = V_{USB} when input power source is from the USB port.

2: The value is guaranteed by design and not production tested.

3: The current is based on the ratio of selected current regulation (I_{REG}).

The maximum charge impedance has to be less than shutdown impedance for normal operation.

© 2007-2015 Microchip Technology Inc.

AC CHARACTERISTICS

Electrical Specifications: Unless otherwise indicated, all limits apply for V_{DD} = [V_{REG} (typical) + 0.3V] to 6V.
Typical values are at +25°C, V_{DD} = [V_{REG} (typical) + 1.0V] .

Parameters	Sym.	Min.	Typ.	Max.	Units	Conditions
UVLO Start Delay	t_{START}	—	—	5	ms	V_{DD} Low to High
Current Regulation						
Transition Time Out of Precondition	t_{DELAY}	—	—	10	ms	$V_{BAT} < V_{PTH}$ to $V_{BAT} > V_{PTH}$
Current Rise Time Out of Precondition	t_{RISE}	—	—	10	ms	I_{OUT} Rising to 90% of I_{REG}
Precondition Comparator Filter Time	t_{PRECON}	0.4	1.3	3.2	ms	Average V_{BAT} Rise/Fall
Termination Comparator Filter Time	t_{TERM}	0.4	1.3	3.2	ms	Average I_{OUT} Falling
$\overline{\text{Charge}}$ Comparator Filter Time	t_{CHARGE}	0.4	1.3	3.2	ms	Average V_{BAT} Falling
Thermistor Comparator Filter Time	t_{THERM}	0.4	1.3	3.2	ms	Average THERM Rise/Fall
Elapsed Timer						
Elapsed Timer Period	$t_{ELAPSED}$	0	0	0	Hours	Timer Disabled
	—	3.6	4.0	4.4	Hours	
	—	5.4	6.0	6.6	Hours	
	—	7.2	8.0	8.8	Hours	
Status Indicators						
Status Output Turn-off	t_{OFF}	—	—	500	µs	I_{SINK} = 1 mA to 0 mA
Status Output Turn-on	t_{ON}	—	—	500	µs	I_{SINK} = 0 mA to 1 mA

TEMPERATURE SPECIFICATIONS

Electrical Specifications: Unless otherwise indicated, all limits apply for V_{DD} = [V_{REG} (typ.) + 0.3V] to 6V.
Typical values are at +25°C, V_{DD} = [V_{REG} (typ.) + 1.0V] .

Parameters	Sym.	Min.	Typ.	Max.	Units	Conditions
Temperature Ranges						
Specified Temperature Range	T_A	-40	—	+85	°C	
Operating Temperature Range	T_J	-40	—	+125	°C	
Storage Temperature Range	T_A	-65	—	+150	°C	
Thermal Package Resistances						
Thermal Resistance, 10-Lead MSOP	θ_{JA}	—	113	—	°C/W	4-Layer JC51-7 Standard Board, Natural Convection(1)
Thermal Resistance, 10-Lead 3 x 3 DFN	θ_{JA}	—	41	—	°C/W	4-Layer JC51-7 Standard Board, Natural Convection

Note 1: This represents the minimum copper condition on the Printed Circuit Board (PCB).

2.0 TYPICAL PERFORMANCE CURVES

Note: The graphs and tables provided following this note are a statistical summary based on a limited number of samples and are provided for informational purposes only. The performance characteristics listed herein are not tested or guaranteed. In some graphs or tables, the data presented may be outside the specified operating range (e.g., outside specified power supply range) and therefore outside the warranted range.

Note: Unless otherwise indicated, V_{DD} = [V_{REG}(typical) + 1V], I_{OUT} = 30 mA, and T_A= +25°C, Constant-voltage mode.

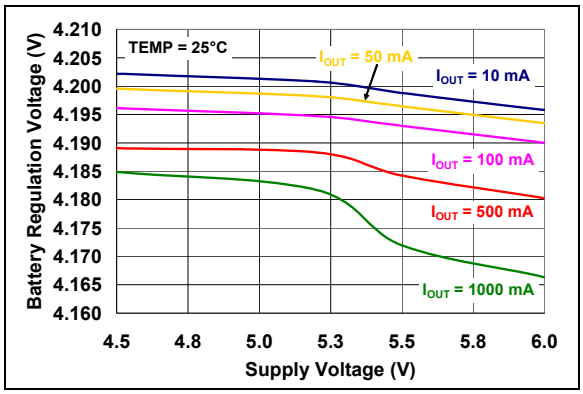

FIGURE 2-1: *Battery Regulation Voltage (V_{BAT}) vs. Supply Voltage (V_{DD}).*

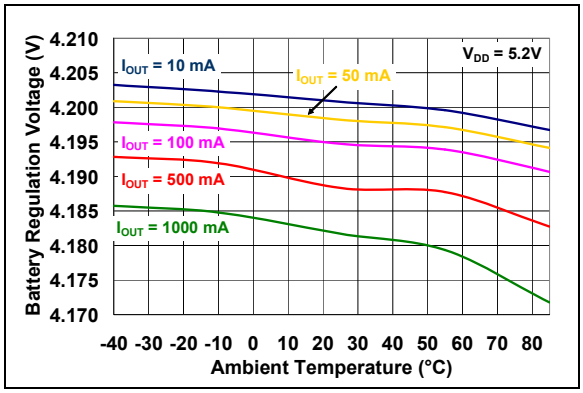

FIGURE 2-2: *Battery Regulation Voltage (V_{BAT}) vs. Ambient Temperature (T_A).*

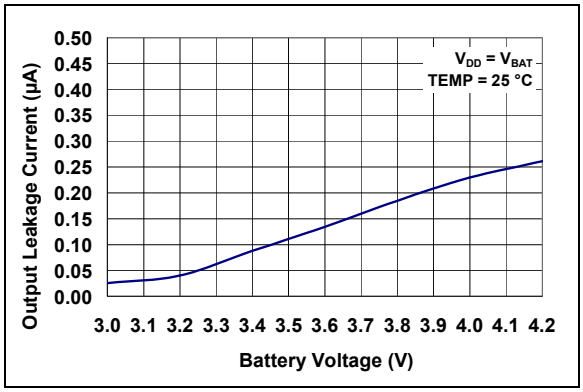

FIGURE 2-3: *Output Leakage Current ($I_{DISCHARGE}$) vs. Battery Regulation Voltage (V_{BAT}).*

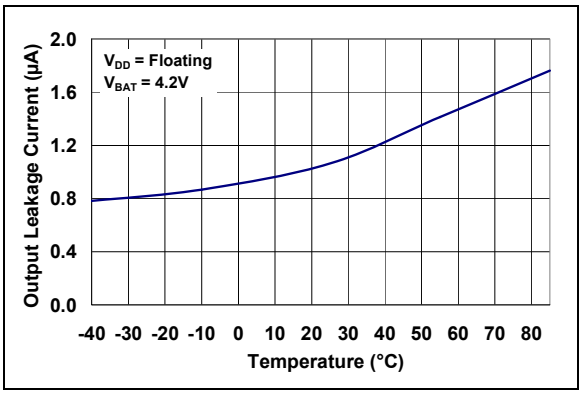

FIGURE 2-4: *Output Leakage Current ($I_{DISCHARGE}$) vs. Ambient Temperature (T_A).*

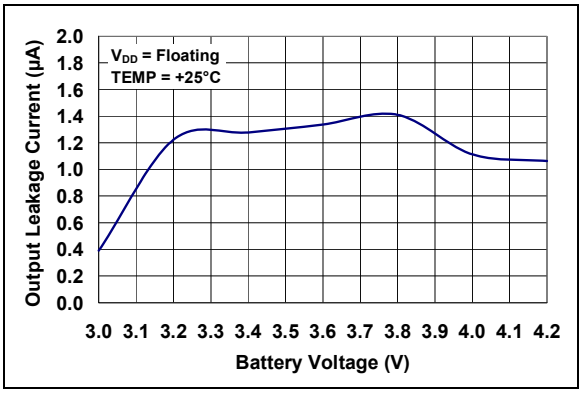

FIGURE 2-5: *Output Leakage Current ($I_{DISCHARGE}$) vs. Battery Voltage (V_{BAT}).*

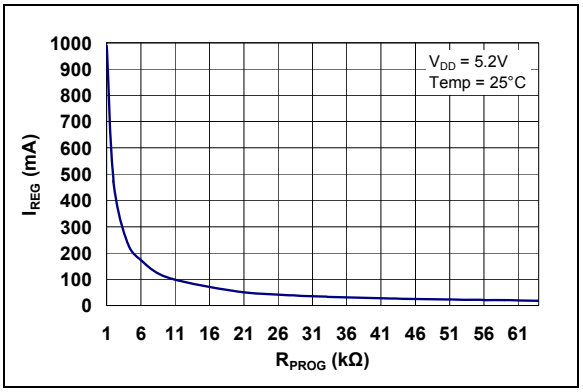

FIGURE 2-6: *Charge Current (I_{OUT}) vs. Programming Resistor (R_{PROG}).*

© 2007-2015 Microchip Technology Inc.

Note: Unless otherwise indicated, V_{DD} = [V_{REG}(typical) + 1V], I_{OUT} = 30 mA and T_A= +25°C, Constant-voltage mode.

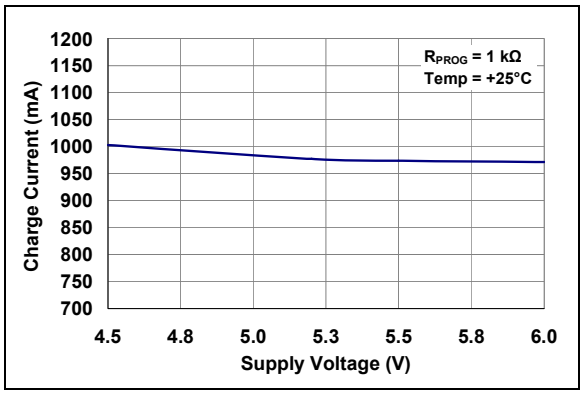

FIGURE 2-7: *Charge Current (I_{OUT}) vs. Supply Voltage (V_{DD}).*

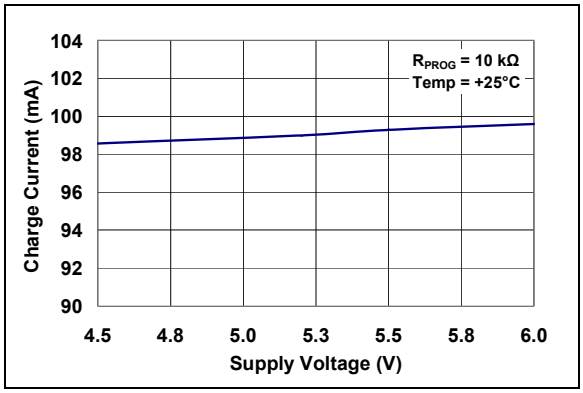

FIGURE 2-8: *Charge Current (I_{OUT}) vs. Supply Voltage (V_{DD}).*

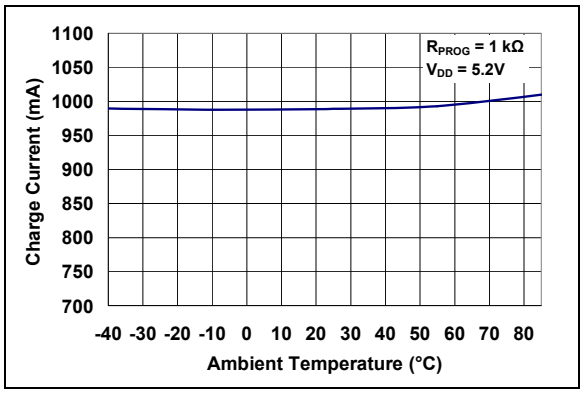

FIGURE 2-9: *Charge Current (I_{OUT}) vs. Ambient Temperature (T_A).*

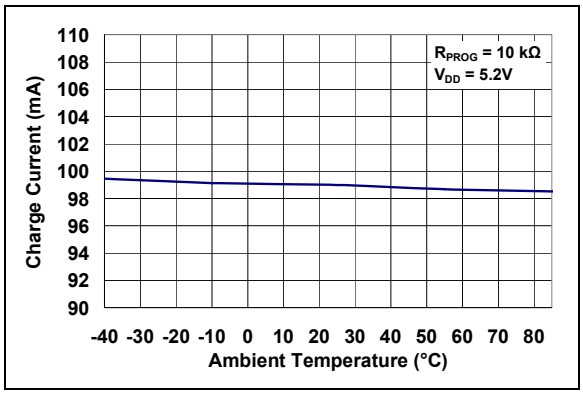

FIGURE 2-10: *Charge Current (I_{OUT}) vs. Ambient Temperature (T_A).*

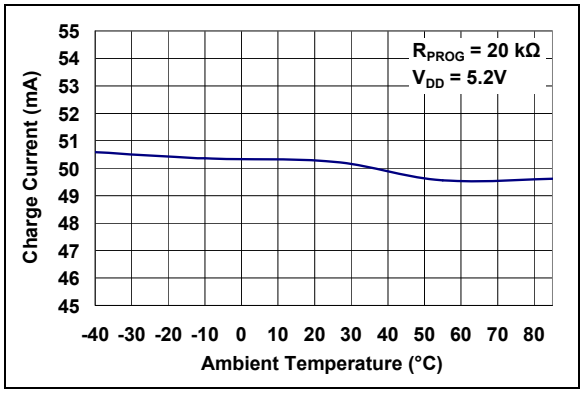

FIGURE 2-11: *Charge Current (I_{OUT}) vs. Ambient Temperature (T_A).*

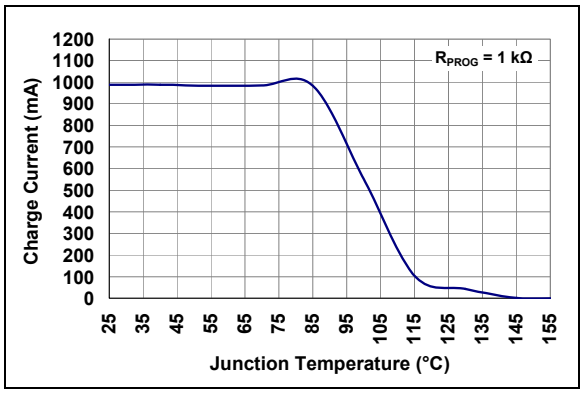

FIGURE 2-12: *Charge Current (I_{OUT}) vs. Junction Temperature (T_J).*

Note: Unless otherwise indicated, V_{DD} = [V_{REG}(typical) + 1V], I_{OUT} = 30 mA and T_A= +25°C, Constant-voltage mode.

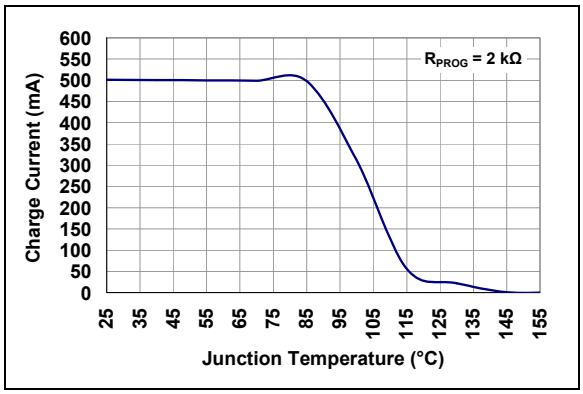

FIGURE 2-13: *Charge Current (I_{OUT}) vs. Junction Temperature (T_J).*

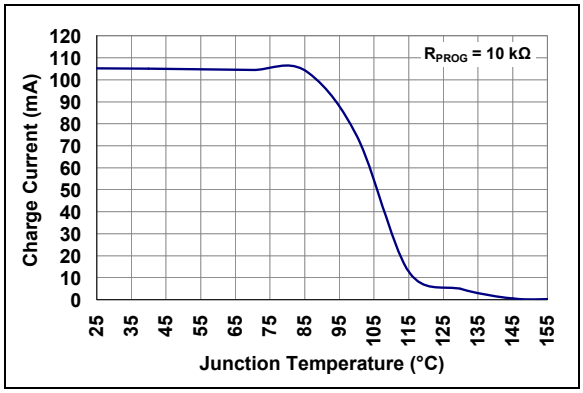

FIGURE 2-14: *Charge Current (I_{OUT}) vs. Junction Temperature (T_J).*

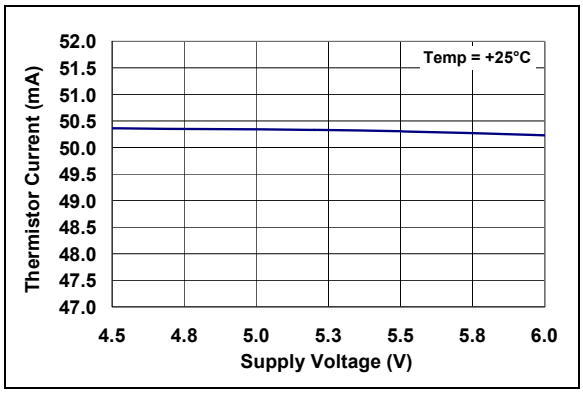

FIGURE 2-15: *Thermistor Current (I_{THERM}) vs. Supply Voltage (V_{DD}).*

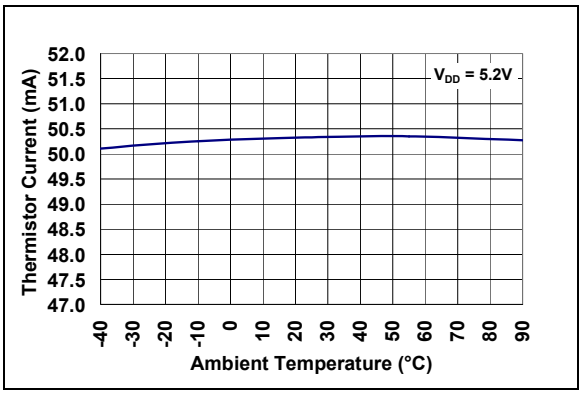

FIGURE 2-16: *Thermistor Current (I_{THERM}) vs. Ambient Temperature (T_A).*

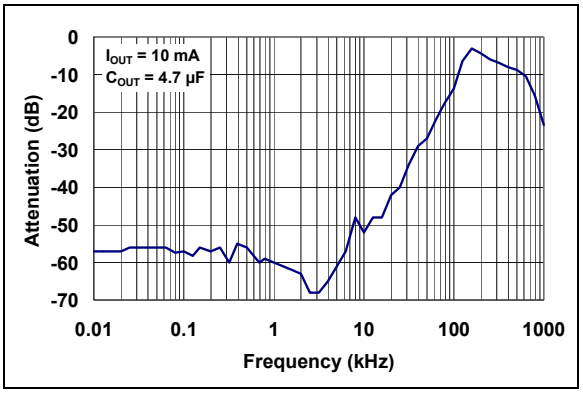

FIGURE 2-17: *Power Supply Ripple Rejection (PSRR).*

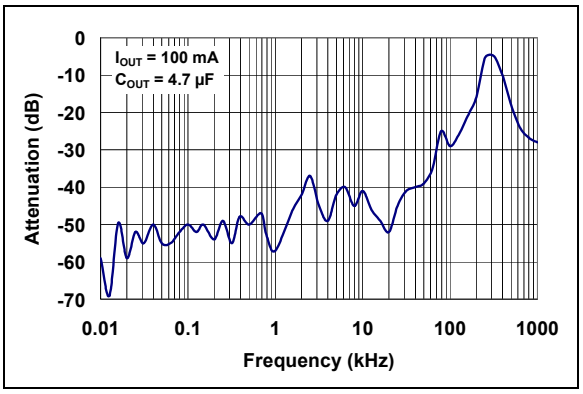

FIGURE 2-18: *Power Supply Ripple Rejection (PSRR).*

© 2007-2015 Microchip Technology Inc.

Note: Unless otherwise indicated, V_{DD} = [V_{REG}(typical) + 1V], I_{OUT} = 30 mA and T_A= +25°C, Constant-voltage mode.

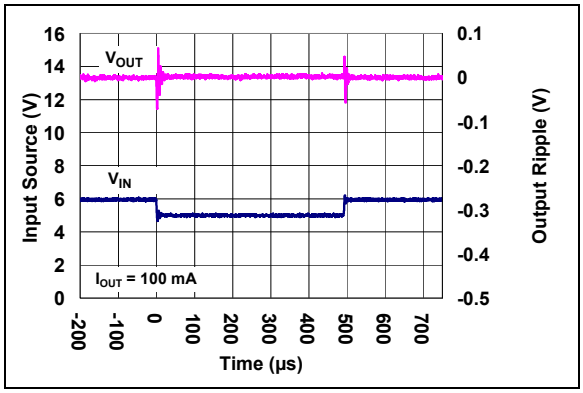

FIGURE 2-19: *Line Transient Response.*

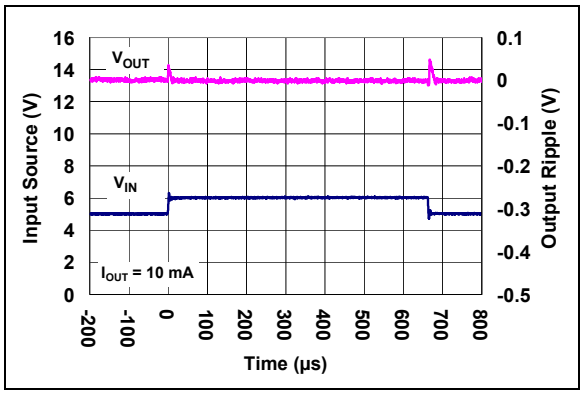

FIGURE 2-20: *Line Transient Response.*

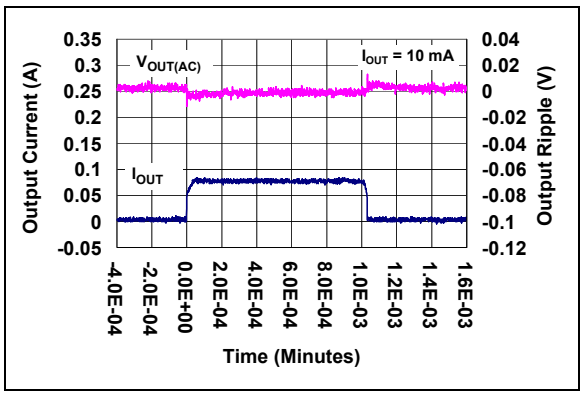

FIGURE 2-21: *Load Transient Response.*

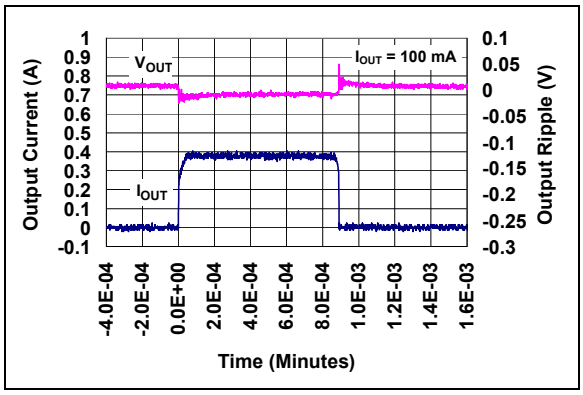

FIGURE 2-22: *Load Transient Response.*

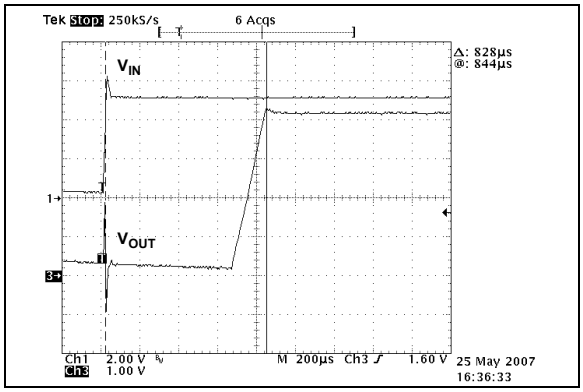

FIGURE 2-23: *V_{AC} Start Delay (I_{OUT} = 1A).*

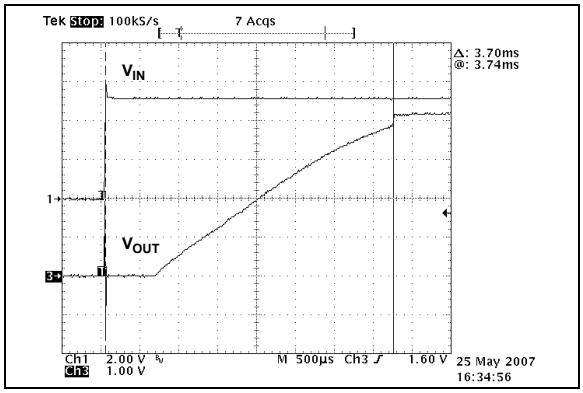

FIGURE 2-24: *V_{USB} Start Delay (USB = Low).*

Note: Unless otherwise indicated, V_{DD} = [V_{REG}(typical) + 1V], I_{OUT} = 30 mA and T_A= +25°C, Constant-voltage mode.

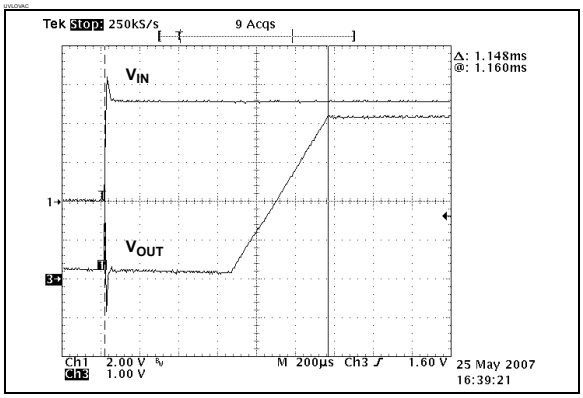

FIGURE 2-25: *V_{USB} Start Delay (USB = High)*

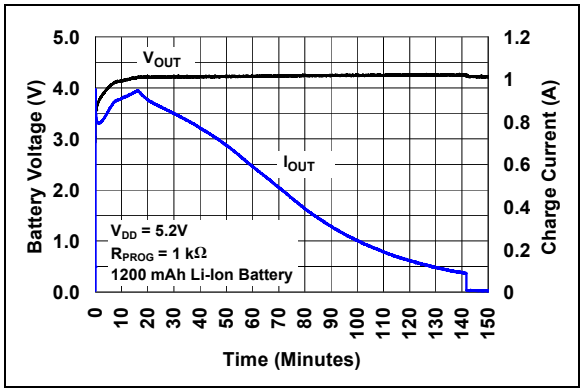

FIGURE 2-26: *Complete Charge Cycle (1200 mAh Li-Ion Battery).*

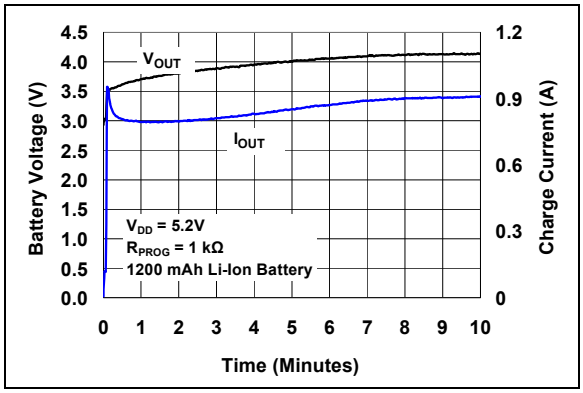

FIGURE 2-27: *Typical Charge Profile in Thermal Regulation (1200 mAh Li-Ion Battery).*

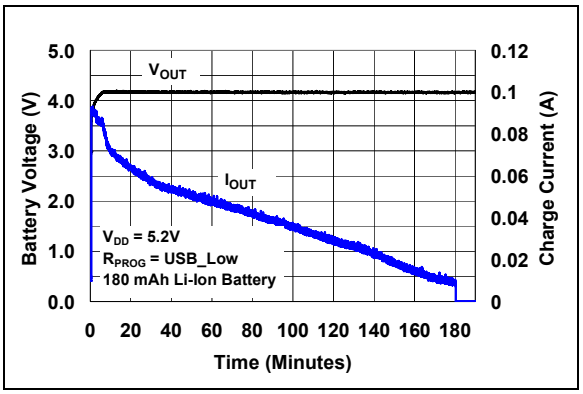

FIGURE 2-28: *Complete Charge Cycle (180 mAh Li-Ion Battery).*

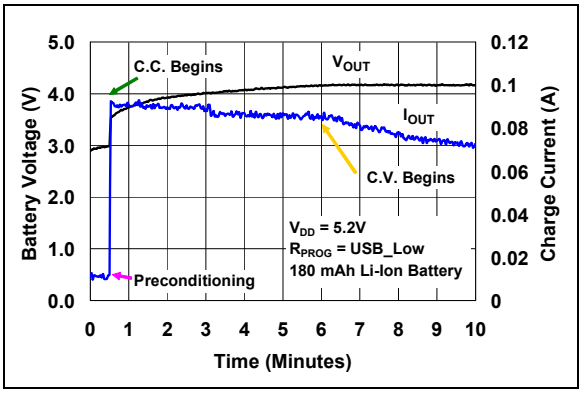

FIGURE 2-29: *Typical Charge Profile in Preconditioning and CC-CV (180 mAh Li-Ion Battery).*

© 2007-2015 Microchip Technology Inc.

3.0 PIN DESCRIPTION

The descriptions of the pins are listed in Table 3-1.

TABLE 3-1: PIN FUNCTION TABLE

Pin Number		Symbol	I/O	Function
DFN-10	MSOP-10			
1	1	V_{AC}	I	AC Adapter Supply Input
2	2	V_{USB}	I	USB port Supply Input
3	3	STAT1	O	Charge Status Output 1 (Open-Drain)
4	4	STAT2	O	Charge Status Output 2 (Open-Drain)
5	5	V_{SS}	—	Battery Management 0V Reference
6	6	PROG1	I/O	Current Regulation Setting With AC Adapter; Device Charge Control Enable; Precondition Set Point for AC control
7	7	PROG2	I	Current Regulation Setting With USB Port; Precondition Set Point for USB control.
8	8	$\overline{PG}$	O	Available on MCP73837: Power-Good Status Output (Open-Drain)
8	8	$\overline{TE}$	I	Available on MCP73838: Timer Enable; Enables Safety Timer (Active Low)
9	9	THERM	I/O	Thermistor Monitoring Input and Bias current; System Test (LDO) Mode Input
10	10	V_{BAT}	I/O	Battery Positive Input and Output Connection
11	—	EP	—	EP (Exposed Thermal Pad) There is an internal electrical connection between the exposed thermal pad and V_{SS}. The EP must be connected to the same potential as the V_{SS} pin on the PCB.

3.1 AC Adapter Supply Input (V_{AC})

A supply voltage of V_{REG} + 0.3V to 6V from the AC/DC wall-adapter is recommended. When both the AC adapter and the USB port supply voltages are present at the same time, the AC adapter dominates the regulated charge current with the maximum value of 1A. Bypass to V_{SS}, with a minimum of 4.7 µF, is recommended.

3.2 USB Port Supply Input (V_{USB})

A supply voltage of V_{REG} + 0.3V to 6V from the USB port is recommended. When no supply voltage from V_{AC} pin is available, the Li-Ion battery is charged directly from USB port. Bypass to V_{SS}, with a minimum of 1 µF, is recommended.

3.3 Charge Status Output 1 (STAT1)

STAT1 is an open-drain logic output for connection to a LED for charge status indication. Alternatively, a pull-up resistor can be applied for interfacing to a host microcontroller.

3.4 Charge Status Output 2 (STAT2)

STAT2 is an open-drain logic output for connection to a LED for charge status indication. Alternatively, a pull-up resistor can be applied for interfacing to a host microcontroller.

3.5 Battery Management 0V Reference (V_{SS})

Connect to the negative terminal of the battery and input supply.

3.6 AC Adapter Current Regulation Set (PROG1)

The AC adapter constant charge current is set by placing a resistor from PROG1 to V_{SS}. PROG1 is the set point of precondition and termination when the AC adapter is present.

PROG1 also functions as device charge control enable. The MCP73837/8 is shut down when an impedance value greater than 70 kΩ is applied to PROG1. When PROG1 is floating, the MCP73837/8 enters into Stand-By mode.

3.7 USB Port Current Regulation Set (PROG2)

The MCP73837/8 USB port current regulation set input (PROG2) is a digital input selection. A logic Low selects a 1 unit load charge current; a logic High selects a 5 unit loads charge current. The precondition and termination current is internally set to the percentage levels selected by the device part number. The current is based on the selected unit load charge current, based on the level of PROG2.

PROG2 also functions as the set point of termination when the USB port is present. When PROG2 is floating, the MCP73837/8 enters into Stand-By mode.

3.8 Power Good ($\overline{PG}$)

Power Good ($\overline{PG}$) is available only on MCP73837. $\overline{PG}$ is an open-drain logic output for connection to an LED for input power supply indication. Alternatively, a pull-up resistor can be applied for interfacing to a host microcontroller.

3.9 Timer Enable ($\overline{TE}$)

Timer Enable ($\overline{TE}$) is available only on MCP73838. $\overline{TE}$ enables the built-in safety timer when it is pulled Low, and disables the built-in safety timer when it is pulled High.

Note:	The built-in safety timer is available for both MCP73837 and MCP73838 in the following options: Disable, 4 HR, 6 HR, and 8 HR.

3.10 Battery Temperature Monitor (THERM)

MCP73837/8 continuously monitors the battery temperature during a charge cycle by measuring the voltage between the THERM and V_{SS} pins. An internal 50 µA current source provides the bias for the most common 10 kΩ negative-temperature coefficient thermistors (NTC).

3.11 Battery Charge Control Output (V_{BAT})

Connect to the positive terminal of Li-Ion/Li-Polymer batteries. Bypass to $V_{SS,}$ with a minimum of 1 µF, to ensure loop stability when the battery is disconnected.

3.12 Exposed Thermal Pad (EP)

The 10-lead 3 x 3 mm DFN package has an exposed metal pad on the bottom of the package. It gives the device better thermal characteristics by providing a good thermal path to a PCB ground plane.There is an internal electrical connection between the EP and the V_{SS} pin; they must be connected to the same potential on the PCB.

© 2007-2015 Microchip Technology Inc.

4.0 DEVICE OVERVIEW

The MCP73837/8 devices are simple, yet fully integrated, linear charge management controllers. Figure 4-1 depicts the operational flow algorithm.

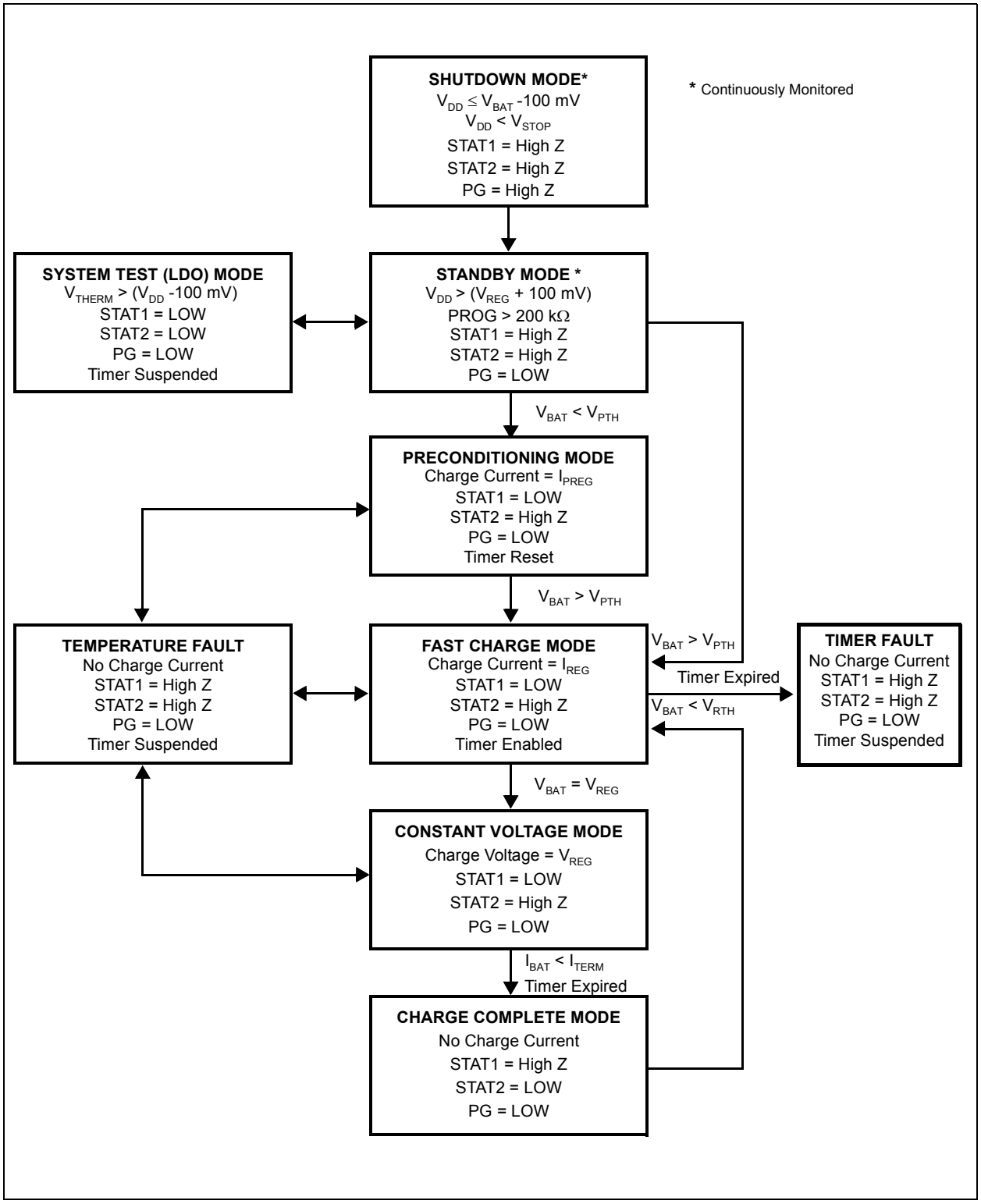

FIGURE 4-1: *Operational Algorithm.*

4.1 Undervoltage Lockout (UVLO)

An internal undervoltage lockout (UVLO) circuit monitors the input voltage and keeps the charger in Shutdown mode until the input supply rises above the UVLO threshold. The UVLO circuitry has a built-in hysteresis of 75 mV for the USB port and 55 mV for the AC adapter.

In the event a battery is present when the input power is applied, the input supply must rise 100 mV above the battery voltage before MCP73837/8 becomes operational.

The UVLO circuit places the device in shutdown mode if the input supply falls to within +100 mV of the battery voltage.

The UVLO circuit is always active. If, at any time, the input supply is below the UVLO threshold or within +100 mV of the voltage at the V_{BAT} pin, the MCP73837/8 is placed in a Shutdown mode.

During any UVLO condition, the battery reverse discharge current is less than 2 µA.

4.2 Autonomous Power Source Selection

The MCP73837/8 devices are designed to select the USB port or AC adapter as the power source automatically. If the AC adapter input is not present, the USB port is selected. If both inputs are available, the AC adapter has first priority.

Note:	If the input power is switched during a charge cycle, the power path switch-over will be a break-before-make connection. As a result, the charge current can momentarily go to zero. The charge cycle timer will remain continuous.

4.3 Charge Qualification

For a charge cycle to begin, all UVLO conditions must be met and a battery or output load must be present.

A charge current programming resistor must be connected from PROG1 to V_{SS}. If the PROG1 or PROG2 pin are open or floating, the MCP73837/8 is disabled and the battery reverse discharge current is less than 2 µA. In this manner, the PROG1 pin acts as a charge enable and can be used as a manual shutdown.

4.4 Preconditioning

If the voltage at the V_{BAT} pin is less than the preconditioning threshold, the MCP73837/8 enters a preconditioning mode. The preconditioning threshold is factory set.

Refer to Section 1.0 “Electrical Characteristics” for preconditioning threshold options.

In this mode, the MCP73837/8 supplies a percentage of the charge current (established with the value of the resistor connected to the PROG1 pin for AC mode, established by PROG2 level for USB mode) to the battery. The percentage or ratio of the current is factory set. Refer to Section 1.0 “Electrical Characteristics” for preconditioning current options.

When the voltage at the V_{BAT} pin rises above the preconditioning threshold, the MCP73837/8 enters the Constant Current or Fast Charge mode.

4.5 Constant Current Mode – Fast Charge

During Constant Current mode, the programmed (AC adapter) or selected (USB port) charge current is supplied to the battery or load.

For AC adapter, the charge current is established using a single resistor from PROG1 to V_{SS}. The program resistor and the charge current are calculated using the Equation 4-1.

EQUATION 4-1:

$$I_{REG} = \frac{1000V}{R_{PROG}}$$

Where:

R_{PROG} = kilohm (kΩ)

I_{REG} = milliampere (mA)

When charging from a USB port, the host microcontroller has the option of selecting either a one-unit-load or a five-unit-loads charge rate based on the PROG2 input. A logic Low selects a one-unit-load charge rate, a High selects a five-unit-loads charge rate, and high impedance input suspends or disables charging.

Note:	USB Specification Rev. 2.0 defines the maximum absolute current for one unit load is 100 mA. This value is not an average over time and cannot be exceeded.

Constant Current mode is maintained until the voltage at the V_{BAT} pin reaches the regulation voltage, V_{REG}. When constant current mode is invoked, the internal timer is reset.

© 2007-2015 Microchip Technology Inc.

4.5.1 TIMER EXPIRED DURING CONSTANT CURRENT – FAST CHARGE MODE

If the internal timer expires before the recharge voltage threshold is reached, a timer fault is indicated and the charge cycle terminates. The MCP73837/8 remains in this condition until the battery is removed, the input battery is removed or the PROG1/2 pin is opened. If the battery is removed or the PROG1/2 pin is opened, the MCP73837/8 enters the Stand-by mode where it remains until a battery is reinserted or the PROG1/2 pin is reconnected. If the input power is removed, the MCP73837/8 is in Shutdown. When the input power is reapplied, a normal start-up sequence begins.

4.6 Constant Voltage Mode

When the voltage at the V_{BAT} pin reaches the regulation voltage, V_{REG}, constant voltage regulation begins. The regulation voltage is factory set to 4.20V, 4.35V, 4.40V, or 4.5V, with a tolerance of ± 0.5%.

4.7 Charge Termination

The charge cycle is terminated when, during constant voltage mode, the average charge current diminishes below a percentage of the programmed charge current, or the internal timer has expired. A 1 ms filter time on the termination comparator ensures that transient load conditions do not result in premature charge cycle termination. The percentage or ratio of the current is factory set. The timer period is factory set and can be disabled. Refer to Section 1.0 “Electrical Characteristics” for charge termination current ratio and timer period options.

The charge current is latched off and the MCP73837/8 enters a charge complete mode.

4.8 Automatic Recharge

The MCP73837/8 continuously monitors the voltage at the V_{BAT} pin in the charge complete mode. If the voltage drops below the recharge threshold, another charge cycle begins and current is once again supplied to the battery or load. The recharge threshold is factory set. Refer to Section 1.0 “Electrical Characteristics” for recharge threshold options.

Note:	Charge termination and automatic recharge features avoid constantly charging a Li-Ion battery in order to prolong its life, while keeping its capacity at a healthy level.

4.9 Thermal Regulation

The MCP73837/8 limits the charge current based on the die temperature. The thermal regulation optimizes the charge cycle time while maintaining device reliability. Figure 4-2 depicts the thermal regulation for the MCP73837/8. Refer to Section 1.0 “Electrical Characteristics” for thermal package resistances and Section 6.1.1.3 “Thermal Considerations” for calculating power dissipation.

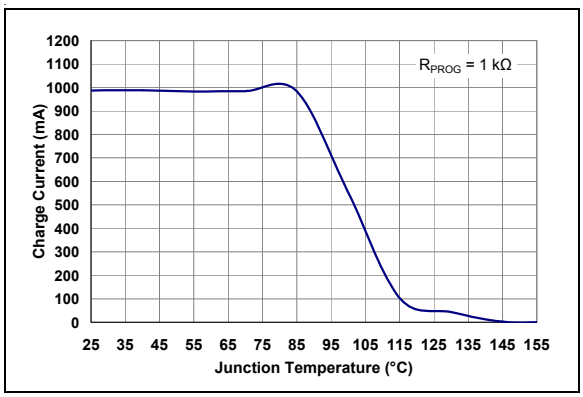

FIGURE 4-2: *Thermal Regulation.*

4.10 Thermal Shutdown

The MCP73837/8 suspends charge if the die temperature exceeds +150°C. Charging will resume when the die temperature has cooled by approximately +10°C. The thermal shutdown is a secondary safety feature in the event that there is a failure within the thermal regulation circuitry.

5.0 DETAILED DESCRIPTION

- Analog Circuitry
- Digital Circuitry

5.1 Analog Circuitry

5.1.1 BATTERY MANAGEMENT INPUT SUPPLY (V_{DD})

The V_{DD} input is the input supply to the MCP73837/8. The MCP73837/8 can be supplied by either AC adapter (V_{AC}) or USB port (V_{USB}) with autonomous source selection. The MCP73837/8 automatically enters a Power-Down mode if the voltage on the V_{DD} input falls to within +100 mV of the battery voltage or below the UVLO voltage (V_{STOP}). This feature prevents draining the battery pack when both the V_{AC} and V_{USB} supplies are not present.

5.1.2 AC ADAPTER CURRENT REGULATION SET (PROG1)

For the MCP73837/8, the charge current regulation can be scaled by placing a programming resistor (R_{PROG}) from the PROG1 input to V_{SS}. The program resistor and the charge current are calculated using the following equation:

EQUATION 5-1:

$$I_{REG} = \frac{1000V}{R_{PROG}}$$

Where:

R_{PROG} = kilohm (kΩ)

I_{REG} = milliampere (mA)

The preconditioning current and the charge termination current are ratiometric to the fast charge current based on the selected device options.

5.1.3 BATTERY CHARGE CONTROL OUTPUT (V_{BAT})

The battery charge control output is the drain terminal of an internal P-channel MOSFET. The MCP73837/8 provides constant current and voltage regulation to the battery pack by controlling this MOSFET in the linear region. The battery charge control output should be connected to the positive terminal of the battery pack.

5.1.4 TEMPERATURE QUALIFICATION (THERM)

The MCP73837/8 continuously monitors battery temperature during a charge cycle by measuring the voltage between the THERM and the V_{SS} pins. An internal 50 µA current source provides the bias for the most common 10 kΩ negative-temperature coefficient (NTC) or positive-temperature coefficient (PTC) thermistors. The current source is controlled, avoiding measurement sensitivity to fluctuations in the supply voltage (V_{DD}). The MCP73837/8 compares the voltage at the THERM pin to factory set thresholds of 1.20V and 0.25V, typically. If a voltage that is outside the thresholds is detected during a charge cycle, the MCP73837/8 immediately suspends the charge cycle.

The MCP73837/8 suspends charge by turning off the pass transistor and holding the timer value. The charge cycle resumes when the voltage at the THERM pin returns to the normal range.

If temperature monitoring is not required, place a standard 10 kΩ resistor from THERM to V_{SS}.

5.1.5 SYSTEM TEST (LDO) MODE

The MCP73837/8 can be placed in a System Test mode. In this mode, the MCP73837/8 operates as a low dropout (LDO) linear regulator. The output voltage is regulated to the factory set voltage regulation option. The available output current is limited to the programmed fast charge current. For stability, the V_{BAT} output must be bypassed to V_{SS} with a minimum capacitance of 1 µF for output currents up to 250 mA. A minimum capacitance of 4.7 µF is required for output currents above 250 mA.

The system test mode is entered by driving the THERM input greater than (V_{DD} – 100 mV) with no battery connected to the output. In this mode, the MCP73837/8 can be used to power the system without a battery being present.

Note 1: I_{THERM} is disabled during shutdown, stand-by, and system test modes.

2: A pull-down current source on the THERM input is active only in Stand-By and System Test modes.

3: During System Test mode, the PROG input sets the available output current limit.

4: System Test mode shall be exited by releasing the THERM input or cycling input power.

© 2007-2015 Microchip Technology Inc.

5.2 Digital Circuitry

5.2.1 STATUS INDICATORS AND POWER GOOD ($\overline{PG}$) OPTION

The charge status outputs have two different states: Low (L), and High Impedance (Hi-Z). The charge status outputs can be used to illuminate LEDs. Optionally, the charge status outputs can be used as an interface to a host microcontroller. Table 5-1 summarizes the state of the status outputs during a charge cycle.

5.2.2 USB PORT CURRENT REGULATION SELECT (PROG2)

For the MCP73837/8, driving the PROG2 input to a logic Low selects the low charge current setting (maximum 100 mA). Driving the PROG2 input to a logic High selects the high charge current setting (maximum 500 mA).

The Precondition current and Termination current are percentages of the charge current selected by the PROG2 level. The percentage is based on the selected part number of the device.

TABLE 5-1: STATUS OUTPUTS

Charge Cycle State	STAT1	STAT2	$\overline{PG}$
Shutdown	High Z	High Z	High-Z
Standby	High-Z	High Z	L
Preconditioning	L	High Z	L
Constant Current	L	High Z	L
Constant Voltage	L	High Z	L
Charge Complete – Standby	High Z	L	L
Temperature Fault	High Z	High Z	L
Timer Fault	High Z	High Z	L
System Test Mode	L	L	L

5.2.3 POWER GOOD ($\overline{PG}$) OPTION

The power good ($\overline{PG}$) option is a pseudo open-drain output. It is only available on the MCP73837. The $\overline{PG}$ output can sink current, but not source current. However, there is a diode path back to the input, and as such, the output should be pulled up only to the input. The $\overline{PG}$ output is low whenever the input to the MCP73837 is above the UVLO threshold and greater than the battery voltage. If the supply voltage is above the UVLO, but below V_{REG}(typical)+0.3V, the MCP73837 will pulse the $\overline{PG}$ output as the device determines if a battery is present.

5.2.4 TIMER ENABLE ($\overline{TE}$) OPTION

The timer enable ($\overline{TE}$) input option is used to enable or disable the internal timer. It is only available on the MCP73838. A low signal on this pin enables the internal timer and a high signal disables the internal timer. The $\overline{TE}$ input can be used to disable the timer when the charger is supplying current to charge the battery and power the system load. The $\overline{TE}$ input is compatible with 1.8V logic.

5.2.5 DEVICE DISABLE (PROG1/2)

The current regulation set input pin (PROG1/2) can be used to terminate a charge at any time during the charge cycle, as well as to initiate a charge cycle or to initiate a recharge cycle.

Placing a programming resistor from the PROG1/2 input to V_{SS} enables the device. Allowing the PROG1/2 input to float or applying a logic-high input signal to PROG1 disables the device and terminates a charge cycle. When disabled, the device's supply current is reduced to 75 µA, typically.

© 2007-2015 Microchip Technology Inc.

6.0 APPLICATIONS

The MCP73837/8 devices are designed to operate in conjunction with a host microcontroller or in stand-alone applications. The MCP73837/8 devices provide the preferred charge algorithm for Lithium-Ion and Lithium-Polymer cells, Constant-Current followed by Constant-Voltage. Figure 6-1 depicts a typical stand-alone MCP73837 application circuit, while Figure 6-2 and Figure 6-3 depict the accompanying charge profile.

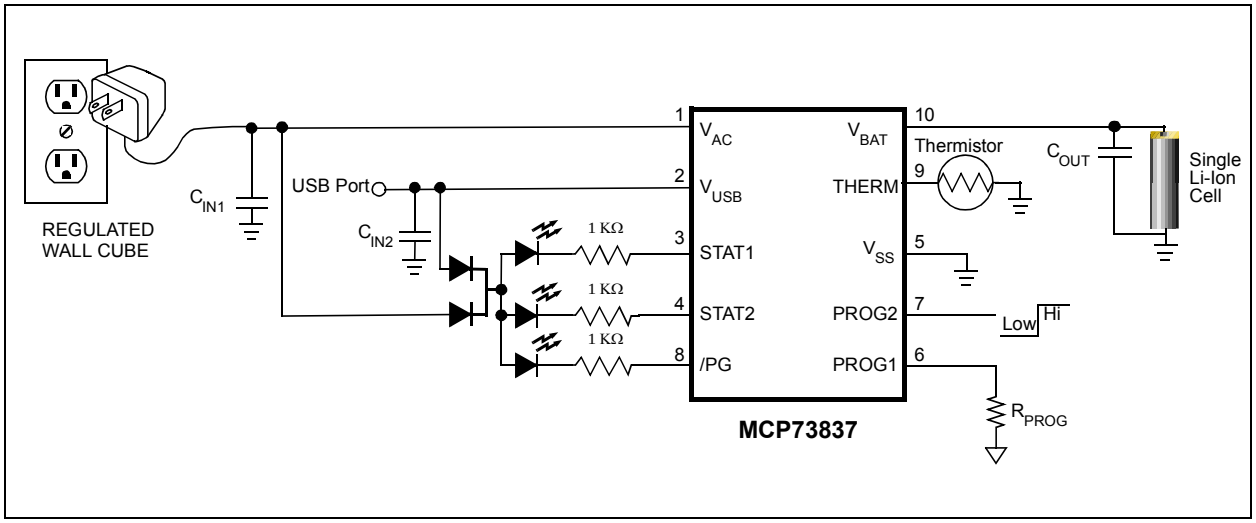

FIGURE 6-1: *MCP73837 Typical Stand-Alone Application Circuit.*

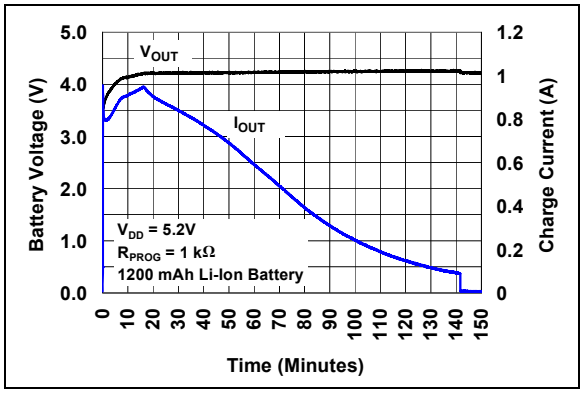

FIGURE 6-2: *Typical Charge Profile (1200 mAh Li-Ion Battery).*

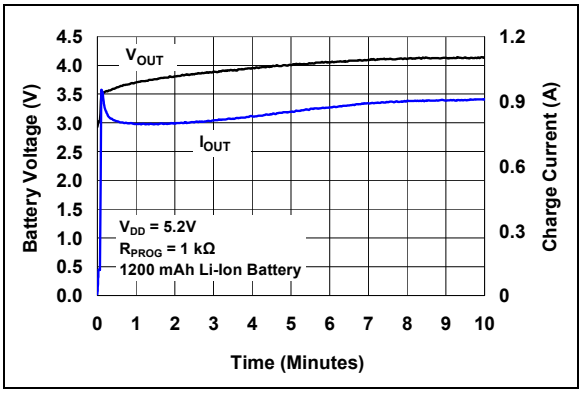

FIGURE 6-3: *Typical Charge Profile in Thermal Regulation (1200 mAh Li-Ion Battery).*

© 2007-2015 Microchip Technology Inc.

6.1 Application Circuit Design

Due to the low efficiency of linear charging, the most important factors are **thermal design** and **cost**, which are a direct function of the input voltage, output current, and thermal impedance between the battery charger and the ambient cooling air.

The worst-case situation is when the device has transitioned from the Preconditioning mode to the Constant Current mode. In this situation, the battery charger has to dissipate the maximum power. A trade-off must be made between the charge current, cost, and thermal requirements of the charger.

6.1.1 COMPONENT SELECTION

Selection of the external components in Figure 6-1 is crucial to the integrity and reliability of the charging system. The following discussion is intended as a guide for the component selection process.

6.1.1.1 Charge Current

The preferred fast charge current for Lithium-Ion cells should always follow references and guidance from battery manufacturers. For example, programming 700 mA fast charge current for a 1000 mAh Li-Ion battery pack if its preferred fast charge rate is 0.7C. This will result in the shortest charge cycle time without degradation of a battery's life and performance.

6.1.1.2 Input Over-Voltage Protection

Input over-voltage protection must be used when the input power source is hot-pluggable. This includes USB cables and wall-type power supplies. The cabling of these supplies acts as an inductor. When the supplies are connected/ disconnected from the system, large voltage transients are created which may damage the system circuitry. These transients should be snubbed out. A TransZorb® diode (unidirectional or bidirectional), connected from the V_{AC} and V_{USB} inputs to 0V ground reference, will snub the transients. An example of this can be shown in Figure 6-4.

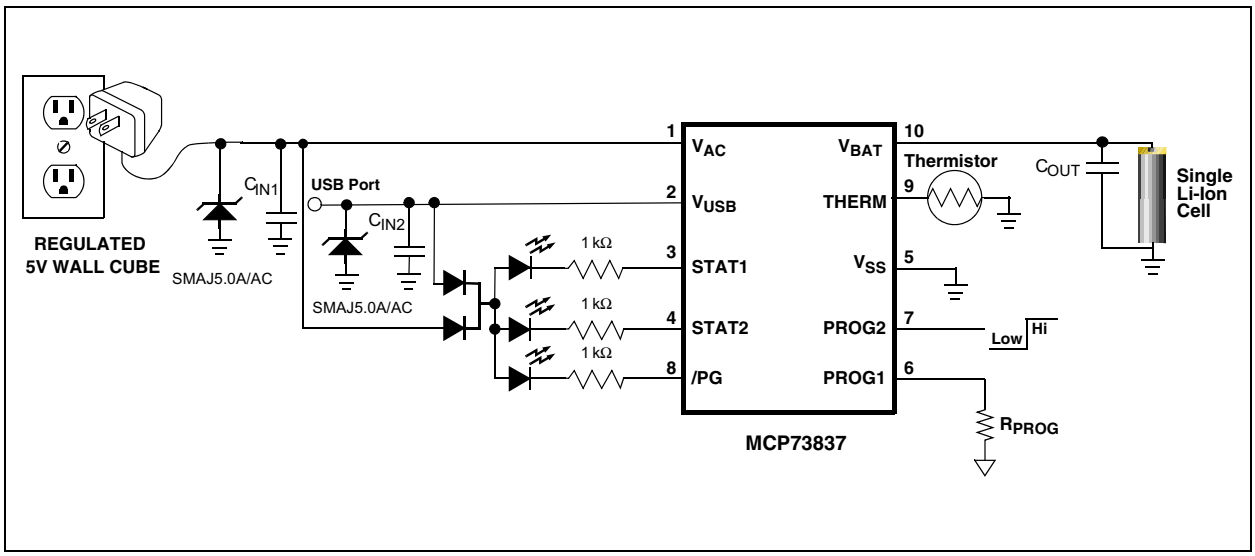

FIGURE 6-4: *Input Over-Voltage Protection Example.*

6.1.1.3 Thermal Considerations

The worst-case power dissipation in the battery charger occurs when the input voltage is at the maximum and the device has transitioned from the Preconditioning mode to the Constant-current mode. In this case, the power dissipation is:

EQUATION 6-1:

$$PowerDissipation = (V_{DDMAX} - V_{PTHMIN}) \times I_{REGMAX}$$

Where:

V_{DDMAX} = the maximum input voltage

I_{REGMAX} = the maximum fast charge current

V_{PTHMIN} = the minimum transition threshold voltage

For example, power dissipation with a 5V, ±10% input voltage source, and a 500 mA, ±10% fast charge current is calculated in the following example:

EXAMPLE 6-1:

$$PowerDissipation = (5.5V - 2.7V) \times 550mA = 1.54W$$

This power dissipation with the battery charger in the MSOP-10 package will cause thermal regulation to be entered as depicted in Figure 6-3. Alternatively, the 3 mm x 3 mm DFN package could be utilized to reduce the charge cycle times.

6.1.1.4 External Capacitors

The MCP73837/8 is stable with or without a battery load. In order to maintain good AC stability in the Constant Voltage mode, a minimum capacitance of 1 µF is recommended to bypass the V_{BAT} pin to V_{SS}. This capacitance provides compensation when there is no battery load. In addition, the battery and interconnections appear inductive at high frequencies. These elements are in the control feedback loop during Constant Voltage mode. Therefore, the bypass capacitance may be necessary to compensate for the inductive nature of the battery pack.

Virtually any good quality output filter capacitor can be used, independent of the capacitor's minimum Effective Series Resistance (ESR) value. The actual value of the capacitor (and its associated ESR) depends on the output load current. A 1 µF ceramic, tantalum, or aluminum electrolytic capacitor at the output is usually sufficient to ensure stability for output currents up to 500 mA.

6.1.1.5 Reverse-Blocking Protection

The MCP73837/8 provides protection from a faulted or shorted input. Without the protection, a faulted or shorted input would discharge the battery pack through the body diode of the internal pass transistor.

6.1.1.6 Charge Inhibit

The current regulation set input pin (PROG1/2) can be used to terminate a charge at any time during the charge cycle, as well as to initiate a charge cycle or a recharge cycle.

Placing a programming resistor from the PROG1 input to V_{SS} or driving PROG2 to logic High or Low enables the device. Allowing either the PROG1/2 input to float disables the device and terminates a charge cycle. When disabled, the device's supply current is reduced to 75 µA, typically.

6.1.1.7 Temperature Monitoring

The charge temperature window can be set by placing fixed value resistors in series-parallel with a thermistor. The resistance values of R_{T1} and R_{T2} can be calculated with the following equations in order to set the temperature window of interest.

For NTC thermistors, see Equation 6-2.

EQUATION 6-2:

$$24k\Omega = R_{T1} + \frac{R_{T2} \times R_{COLD}}{R_{T2} + R_{COLD}}$$

$$5k\Omega = R_{T1} + \frac{R_{T2} \times R_{HOT}}{R_{T2} + R_{HOT}}$$

Where:

R_{T1} = the fixed series resistance

R_{T2} = the fixed parallel resistance

R_{COLD} = the thermistor resistance at the lower temperature of interest

R_{HOT} = the thermistor resistance at the upper temperature of interest

For example, by utilizing a 10 kΩ at +25°C NTC thermistor with a sensitivity index, β, of 3892, the charge temperature range can be set to 0°C – +50°C by placing a 1.54 kΩ resistor in series (R_{T1}), and a 69.8 kΩ resistor in parallel (R_{T2}) with the thermistor.

6.1.1.8 Charge Status Interface

A status output provides information on the state of charge. The output can be used to illuminate external LEDs or interface to a host microcontroller. Refer to Table 5-1 or Figure 4-1 for information on the state of the status output during a charge cycle.

© 2007-2015 Microchip Technology Inc.

6.2 PCB Layout Issues

For optimum voltage regulation, place the battery pack as close as possible to the device's V_{BAT} and V_{SS} pins. This is recommended to minimize voltage drops along the high-current-carrying PCB traces.

If the PCB layout is used as a heat sink, adding many vias in the heatsink pad can help conduct more heat to the backplane of the PCB, thus reducing the maximum junction temperature.

7.0 PACKAGING INFORMATION

7.1 Package Marking Information

10-Lead DFN

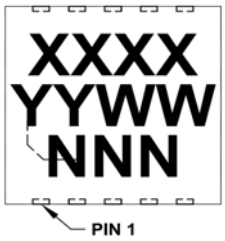

Part Number(1)	Marking Code	Part Number(1)	Marking Code
MCP73837-FCI/MF	BABA	MCP73837T-FCI/MF	BABA
MCP73837-FJI/MF	BABB	MCP73837T-FJI/MF	BABB
MCP73837-NVI/MF	BABC	MCP73837T-NVI/MF	BABC
MCP73838-FCI/MF	BACA	MCP73838T-FCI/MF	BACA
MCP73838-FJI/MF	BACB	MCP73838T-FJI/MF	BACB
MCP73838-NVI/MF	BACC	MCP73838T-NVI/MF	BACC

Example:

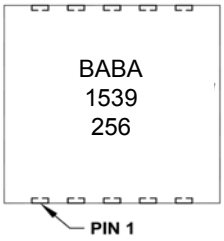

10-Lead MSOP(2)

Part Number(1)	Marking Code	Part Number(1)	Marking Code
MCP73837-FCI/UN	837FCI	MCP73837T-FCI/UN	837FCI
MCP73837-FJI/UN	837FJI	MCP73837T-FJI/UN	837FJI
MCP73837-NVI/UN	837NVI	MCP73837T-NVI/UN	837NVI
MCP73838-FCI/UN	838FCI	MCP73838T-FCI/UN	838FCI
MCP73838-FJI/UN	838FJI	MCP73838T-FJII/UN	838FJI
MCP73838-NVI/UN	838NVI	MCP73838T-NVI/UN	838NVI
MCP73838-AMI/UN	838AMI	MCP73838T-AMI/UN	838AMI

Example:

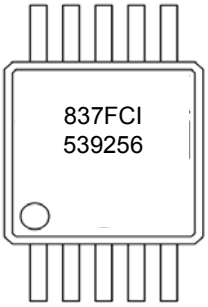

Note 1: Consult Factory for Alternative Device Options.
2: Consult Factory for MSOP Package Availability.

Legend:

XX...X	Customer-specific information
Y	Year code (last digit of calendar year)
YY	Year code (last 2 digits of calendar year)
WW	Week code (week of January 1 is week ‘01’)
NNN	Alphanumeric traceability code
(e3)	Pb-free JEDEC designator for Matte Tin (Sn)
*	This package is Pb-free. The Pb-free JEDEC designator ((e3)) can be found on the outer packaging for this package.

Note: In the event the full Microchip part number cannot be marked on one line, it will be carried over to the next line, thus limiting the number of available characters for customer-specific information.

© 2007-2015 Microchip Technology Inc.

10-Lead Plastic Dual Flat, No Lead Package (MF) - 3x3x0.9mm Body [DFN]

Note: For the most current package drawings, please see the Microchip Packaging Specification located at http://www.microchip.com/packaging

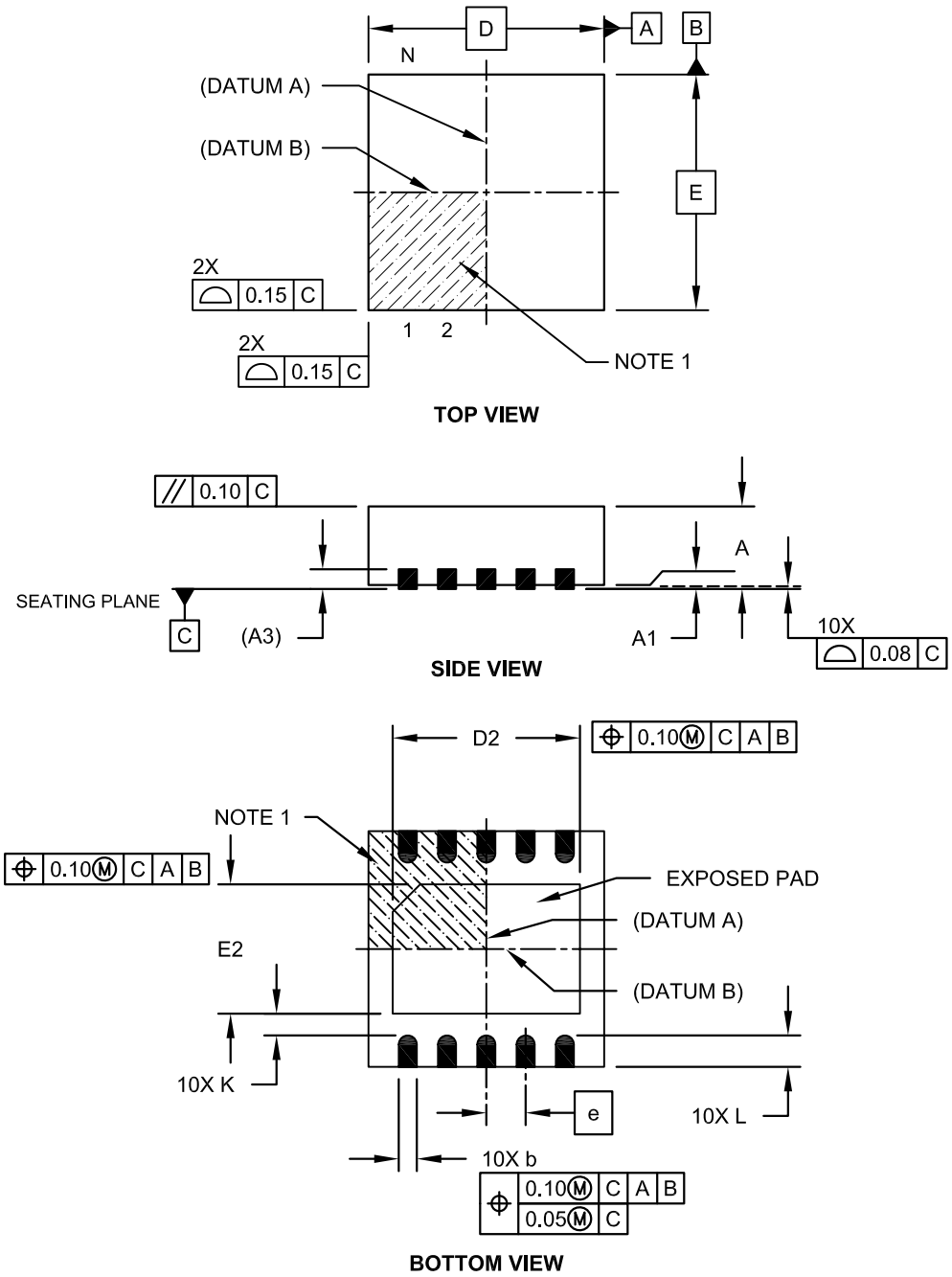

Microchip Technology Drawing No. C04-063C Sheet 1 of 2

10-Lead Plastic Dual Flat, No Lead Package (MF) - 3x3x0.9mm Body [DFN]

Note: For the most current package drawings, please see the Microchip Packaging Specification located at http://www.microchip.com/packaging

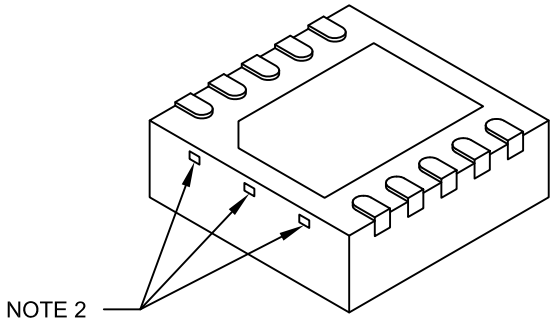

Units		MILLIMETERS		
Dimension Limits		MIN	NOM	MAX
Number of Pins	N	10		
Pitch	e	0.50 BSC		
Overall Height	A	0.80	0.90	1.00
Standoff	A1	0.00	0.02	0.05
Contact Thickness	A3	0.20 REF		
Overall Length	D	3.00 BSC		
Exposed Pad Length	D2	2.15	2.35	2.45
Overall Width	E	3.00 BSC		
Exposed Pad Width	E2	1.40	1.50	1.75
Contact Width	b	0.18	0.25	0.30
Contact Length	L	0.30	0.40	0.50
Contact-to-Exposed Pad	K	0.20	-	-

Notes:

1. Pin 1 visual index feature may vary, but must be located within the hatched area.
2. Package may have one or more exposed tie bars at ends.
3. Package is saw singulated.
4. Dimensioning and tolerancing per ASME Y14.5M.
   BSC: Basic Dimension. Theoretically exact value shown without tolerances.
   REF: Reference Dimension, usually without tolerance, for information purposes only.

Microchip Technology Drawing No. C04-063C Sheet 2 of 2

© 2007-2015 Microchip Technology Inc.

10-Lead Plastic Dual Flat, No Lead Package (MF) - 3x3x0.9mm Body [DFN]

Note: For the most current package drawings, please see the Microchip Packaging Specification located at http://www.microchip.com/packaging

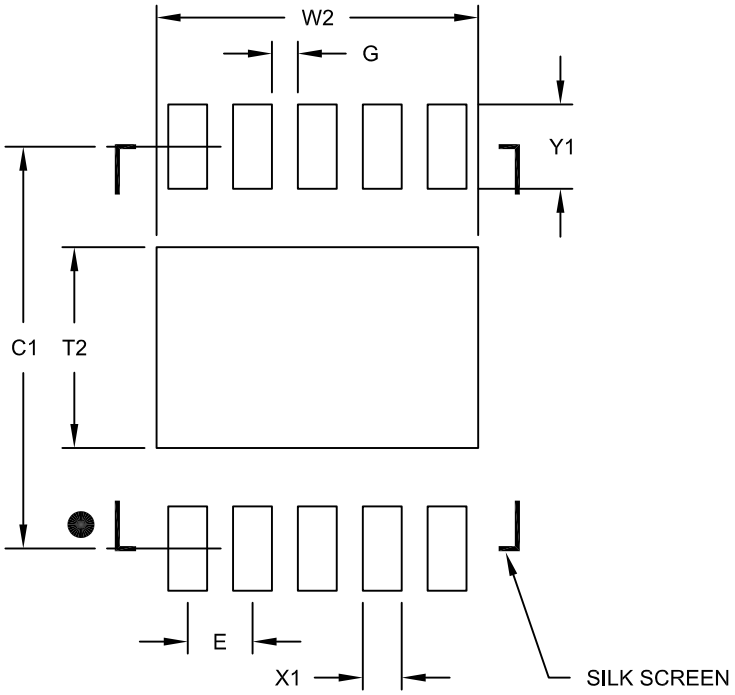

RECOMMENDED LAND PATTERN

Units		MILLIMETERS		
Dimension Limits		MIN	NOM	MAX
Contact Pitch	E		0.50 BSC	
Optional Center Pad Width	W2			2.48
Optional Center Pad Length	T2			1.55
Contact Pad Spacing	C1		3.10	
Contact Pad Width (X10)	X1			0.30
Contact Pad Length (X10)	Y1			0.65
Distance Between Pads	G	0.20		

Notes:

1. Dimensioning and tolerancing per ASME Y14.5M

   BSC: Basic Dimension. Theoretically exact value shown without tolerances.

Microchip Technology Drawing No. C04-2063B

10-Lead Plastic Micro Small Outline Package (UN) [MSOP]

Note:	For the most current package drawings, please see the Microchip Packaging Specification located at http://www.microchip.com/packaging

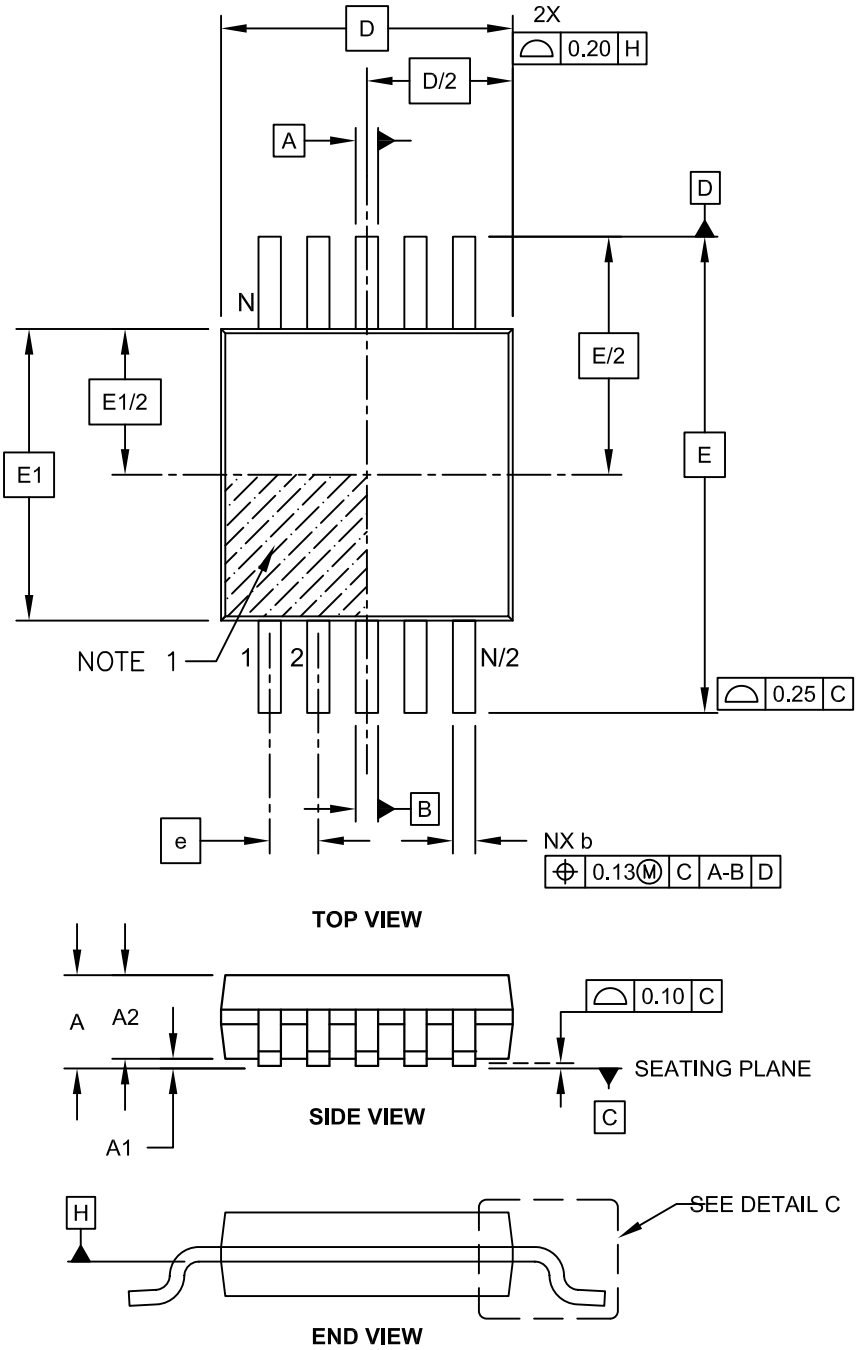

Microchip Technology Drawing C04-021C Sheet 1 of 2

© 2007-2015 Microchip Technology Inc.

10-Lead Plastic Micro Small Outline Package (UN) [MSOP]

Note: For the most current package drawings, please see the Microchip Packaging Specification located at http://www.microchip.com/packaging

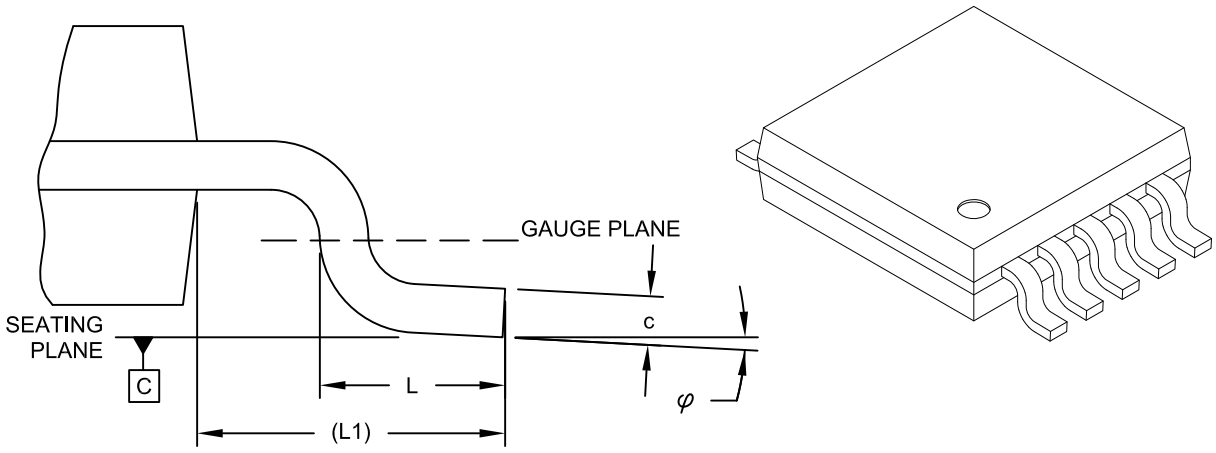

DETAIL C

Units		MILLIMETERS		
Dimension Limits		MIN	NOM	MAX
Number of Pins	N	10		
Pitch	e	0.50 BSC		
Overall Height	A	-	-	1.10
Molded Package Thickness	A2	0.75	0.85	0.95
Standoff	A1	0.00	-	0.15
Overall Width	E	4.90 BSC		
Molded Package Width	E1	3.00 BSC		
Overall Length	D	3.00 BSC		
Foot Length	L	0.40	0.60	0.80
Footprint	L1	0.95 REF		
Foot Angle	φ	0°	-	8°
Lead Thickness	c	0.08	-	0.23
Lead Width	b	0.15	-	0.33

Notes:

1. Pin 1 visual index feature may vary, but must be located within the hatched area.
2. Dimensions D and E1 do not include mold flash or protrusions. Mold flash or protrusions shall not exceed 0.15mm per side.
3. Dimensioning and tolerancing per ASME Y14.5M.
   BSC: Basic Dimension. Theoretically exact value shown without tolerances.
   REF: Reference Dimension, usually without tolerance, for information purposes only.

Microchip Technology Drawing C04-021C Sheet 2 of 2

10-Lead Plastic Micro Small Outline Package (UN) [MSOP]

Note: For the most current package drawings, please see the Microchip Packaging Specification located at http://www.microchip.com/packaging

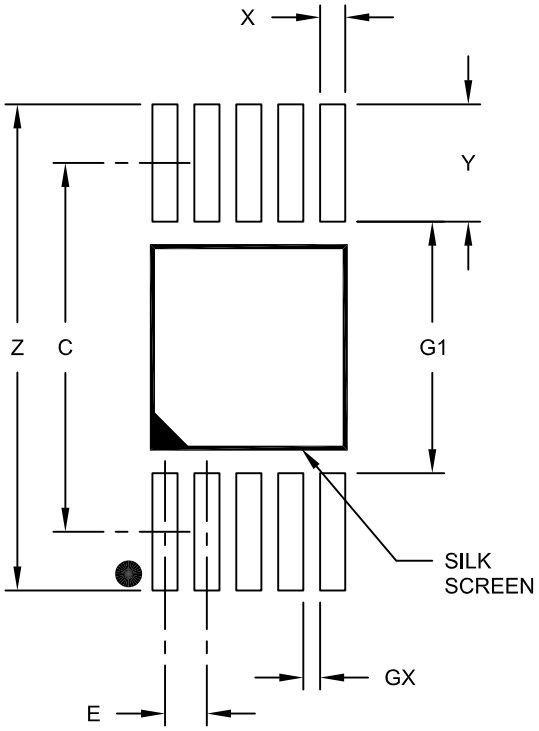

RECOMMENDED LAND PATTERN

Units		MILLIMETERS		
Dimension Limits		MIN	NOM	MAX
Contact Pitch	E		0.50 BSC	
Contact Pad Spacing	C		4.40	
Overall Width	Z			5.80
Contact Pad Width (X10)	X1			0.30
Contact Pad Length (X10)	Y1			1.40
Distance Between Pads	G1	3.00		
Distance Between Pads	GX	0.20		

Notes:

1. Dimensioning and tolerancing per ASME Y14.5M
   BSC: Basic Dimension. Theoretically exact value shown without tolerances.

Microchip Technology Drawing No. C04-2021A

© 2007-2015 Microchip Technology Inc.

APPENDIX A: REVISION HISTORY

Revision C (November 2015)

The following is the list of modifications:

1. Added **Section 6.1.1.2 "Input Over-Voltage Protection"**.
2. Added Figure 6-4.
3. Added CN output option to **"Operational Output Options"** table in **"Product Identification System"**.
4. Minor typographical errors.

Revision B (December 2011)

The following is the list of modifications:

1. Updated the Functional Block Diagram on page 3.
2. Added labels on the charts throughout **Section 2.0 "Typical Performance Curves"**.
3. Updated text in **Section 3.7 "USB Port Current Regulation Set (PROG2)"**.
4. Updated text in **Section 4.4 "Preconditioning"**.
5. Updated text in **Section 5.2.2 "USB port Current Regulation Select (PROG2)"**.
6. Added labels in Figure 6-2 and Figure 6-3.

Revision A (November 2007)

- Original Release of this Document.

NOTES:

© 2007-2015 Microchip Technology Inc.

PRODUCT IDENTIFICATION SYSTEM

To order or obtain information, e.g., on pricing or delivery, refer to the factory or the listed sales office.

PART NO. **XX** **X/** **XX**

Device **Output Options*** **Temp.** **Package**

Device:	MCP73837:	1A Fully Integrated Charger, $\overline{PG}$ function on pin 8
	MCP73837T:	1A Fully Integrated Charger, $\overline{PG}$ function on pin 8 (Tape and Reel)
	MCP73838:	1A Fully Integrated Charger, $\overline{TE}$ function on pin 8
	MCP73838T:	1A Fully Integrated Charger, $\overline{TE}$ function on pin 8 (Tape and Reel)
Output Options[1]	Refer to **"Operational Output Options"** table for different operational output options.	
Temperature:	I = -40°C to +85°C	
Package Type:	MF =	10-Lead Plastic Dual Flat, No Lead Package 3 x 3 x 0.9 mm Body, DFN
	UN =	10-Lead Plastic Micro Small Outline Package, MSOP [2]

Note 1: Consult the factory for alternative device options.
2: Consult the factory for MSOP package availability.

Examples[1]:

a) MCP73837-FCI/MF: 10-lead DFN package
b) MCP73837-FJI/MF: 10-lead DFN package
c) MCP73837-NVI/MF: 10-lead DFN package
d) MCP73837T-FCI/MF: 10-lead DFN package, Tape and Reel
e) MCP73837T-FJI/MF: 10-lead DFN package, Tape and Reel
f) MCP73837T-NVI/MF: 10-lead DFN package, Tape and Reel
g) MCP73837-FCI/UN: 10-lead MSOP package
h) MCP73837-FJI/UN: 10-lead MSOP package
i) MCP73837-NVI/UN: 10-lead MSOP package
j) MCP73837T-FCI/UN: 10-lead MSOP package Tape and Reel
k) MCP73837T-FJI/UN: 10-lead MSOP package Tape and Reel
l) MCP73837T-NVI/UN: 10-lead MSOP package Tape and Reel

a) MCP73838-FCI/MF: 10-lead DFN package
b) MCP73838-FJI/MF: 10-lead DFN package
c) MCP73838-NVI/MF: 10-lead DFN package
d) MCP73838T-FCI/MF: 10-lead DFN package Tape and Reel
e) MCP73838T-FJI/MF: 10-lead DFN package Tape and Reel
f) MCP73838T-NVI/MF: 10-lead DFN package Tape and Reel
g) MCP73838-AMI/UN: 10-lead MSOP package
h) MCP73838-FCI/UN: 10-lead MSOP package
i) MCP73838-FJI/UN: 10-lead MSOP package
j) MCP73838-NVI/UN: 10-lead MSOP package
k) MCP73838T-AMI/UN: 10-lead MSOP package Tape and Reel
l) MCP73838T-FCI/UN: 10-lead MSOP package Tape and Reel
m) MCP73838T-FJI/UN: 10-lead MSOP package Tape and Reel
n) MCP73838T-FCI/UN: 10-lead MSOP package Tape and Reel

OPERATIONAL OUTPUT OPTIONS

Output Options	V_{REG}	I_{PREG}/I_{REG}	V_{PTH}/V_{REG}	I_{TERM}/I_{REG}	V_{RTH}/V_{REG}	Timer Period
AM	4.20V	10%	71.5%	7.5%	96.5%	0 hours
BZ	4.20V	100%	N/A	7.5%	96.5%	0 hours
FC	4.20V	10%	71.5%	7.5%	96.5%	6 hours
GP	4.20V	100%	N/A	7.5%	96.5%	6 hours
G8	4.20V	10%	71.5%	7.5%	96.5%	8 hours
NV	4.35V	10%	71.5%	7.5%	96.5%	6 hours
YA	4.40V	10%	71.5%	7.5%	96.5%	6 hours
6S	4.50V	10%	71.5%	7.5%	96.5%	6 hours
B6	4.20V	10%	66.5%	5.0%	96.5%	4 hours
CN	4.20V	10%	71.5%	20%	94%	4 hours
FJ	4.20V	10%	71.5%	20%	94%	6 hours

© 2007-2015 Microchip Technology Inc.

NOTES:

© 2007-2015 Microchip Technology Inc.

Note the following details of the code protection feature on Microchip devices:

- Microchip products meet the specification contained in their particular Microchip Data Sheet.
- Microchip believes that its family of products is one of the most secure families of its kind on the market today, when used in the intended manner and under normal conditions.
- There are dishonest and possibly illegal methods used to breach the code protection feature. All of these methods, to our knowledge, require using the Microchip products in a manner outside the operating specifications contained in Microchip's Data Sheets. Most likely, the person doing so is engaged in theft of intellectual property.
- Microchip is willing to work with the customer who is concerned about the integrity of their code.
- Neither Microchip nor any other semiconductor manufacturer can guarantee the security of their code. Code protection does not mean that we are guaranteeing the product as "unbreakable."

Code protection is constantly evolving. We at Microchip are committed to continuously improving the code protection features of our products. Attempts to break Microchip's code protection feature may be a violation of the Digital Millennium Copyright Act. If such acts allow unauthorized access to your software or other copyrighted work, you may have a right to sue for relief under that Act.

Information contained in this publication regarding device applications and the like is provided only for your convenience and may be superseded by updates. It is your responsibility to ensure that your application meets with your specifications. MICROCHIP MAKES NO REPRESENTATIONS OR WARRANTIES OF ANY KIND WHETHER EXPRESS OR IMPLIED, WRITTEN OR ORAL, STATUTORY OR OTHERWISE, RELATED TO THE INFORMATION, INCLUDING BUT NOT LIMITED TO ITS CONDITION, QUALITY, PERFORMANCE, MERCHANTABILITY OR FITNESS FOR PURPOSE**.** Microchip disclaims all liability arising from this information and its use. Use of Microchip devices in life support and/or safety applications is entirely at the buyer's risk, and the buyer agrees to defend, indemnify and hold harmless Microchip from any and all damages, claims, suits, or expenses resulting from such use. No licenses are conveyed, implicitly or otherwise, under any Microchip intellectual property rights unless otherwise stated.

Trademarks

The Microchip name and logo, the Microchip logo, dsPIC, FlashFlex, flexPWR, JukeBlox, KEELOQ, KEELOQ logo, Kleer, LANCheck, MediaLB, MOST, MOST logo, MPLAB, OptoLyzer, PIC, PICSTART, PIC32 logo, RightTouch, SpyNIC, SST, SST Logo, SuperFlash and UNI/O are registered trademarks of Microchip Technology Incorporated in the U.S.A. and other countries.

The Embedded Control Solutions Company and mTouch are registered trademarks of Microchip Technology Incorporated in the U.S.A.

Analog-for-the-Digital Age, BodyCom, chipKIT, chipKIT logo, CodeGuard, dsPICDEM, dsPICDEM.net, ECAN, In-Circuit Serial Programming, ICSP, Inter-Chip Connectivity, KleerNet, KleerNet logo, MiWi, motorBench, MPASM, MPF, MPLAB Certified logo, MPLIB, MPLINK, MultiTRAK, NetDetach, Omniscient Code Generation, PICDEM, PICDEM.net, PICkit, PICtail, RightTouch logo, REAL ICE, SQI, Serial Quad I/O, Total Endurance, TSHARC, USBCheck, VariSense, ViewSpan, WiperLock, Wireless DNA, and ZENA are trademarks of Microchip Technology Incorporated in the U.S.A. and other countries.

SQTP is a service mark of Microchip Technology Incorporated in the U.S.A.

Silicon Storage Technology is a registered trademark of Microchip Technology Inc. in other countries.

GestIC is a registered trademark of Microchip Technology Germany II GmbH & Co. KG, a subsidiary of Microchip Technology Inc., in other countries.

All other trademarks mentioned herein are property of their respective companies.

© 2011-2015, Microchip Technology Incorporated, Printed in the U.S.A., All Rights Reserved.

ISBN: 978-1-63277-879-6

QUALITY MANAGEMENT SYSTEM
CERTIFIED BY DNV
= ISO/TS 16949 =

Microchip received ISO/TS-16949:2009 certification for its worldwide headquarters, design and wafer fabrication facilities in Chandler and Tempe, Arizona; Gresham, Oregon and design centers in California and India. The Company's quality system processes and procedures are for its PIC® MCUs and dsPIC® DSCs, KEELOQ® code hopping devices, Serial EEPROMs, microperipherals, nonvolatile memory and analog products. In addition, Microchip's quality system for the design and manufacture of development systems is ISO 9001:2000 certified.

Worldwide Sales and Service

AMERICAS

Corporate Office
2355 West Chandler Blvd.
Chandler, AZ 85224-6199
Tel: 480-792-7200
Fax: 480-792-7277
Technical Support:
http://www.microchip.com/support
Web Address:
www.microchip.com

Atlanta
Duluth, GA
Tel: 678-957-9614
Fax: 678-957-1455

Austin, TX
Tel: 512-257-3370

Boston
Westborough, MA
Tel: 774-760-0087
Fax: 774-760-0088

Chicago
Itasca, IL
Tel: 630-285-0071
Fax: 630-285-0075

Cleveland
Independence, OH
Tel: 216-447-0464
Fax: 216-447-0643

Dallas
Addison, TX
Tel: 972-818-7423
Fax: 972-818-2924

Detroit
Novi, MI
Tel: 248-848-4000

Houston, TX
Tel: 281-894-5983

Indianapolis
Noblesville, IN
Tel: 317-773-8323
Fax: 317-773-5453

Los Angeles
Mission Viejo, CA
Tel: 949-462-9523
Fax: 949-462-9608

New York, NY
Tel: 631-435-6000

San Jose, CA
Tel: 408-735-9110

Canada - Toronto
Tel: 905-673-0699
Fax: 905-673-6509

ASIA/PACIFIC

Asia Pacific Office
Suites 3707-14, 37th Floor
Tower 6, The Gateway
Harbour City, Kowloon

Hong Kong
Tel: 852-2943-5100
Fax: 852-2401-3431

Australia - Sydney
Tel: 61-2-9868-6733
Fax: 61-2-9868-6755

China - Beijing
Tel: 86-10-8569-7000
Fax: 86-10-8528-2104

China - Chengdu
Tel: 86-28-8665-5511
Fax: 86-28-8665-7889

China - Chongqing
Tel: 86-23-8980-9588
Fax: 86-23-8980-9500

China - Dongguan
Tel: 86-769-8702-9880

China - Hangzhou
Tel: 86-571-8792-8115
Fax: 86-571-8792-8116

China - Hong Kong SAR
Tel: 852-2943-5100
Fax: 852-2401-3431

China - Nanjing
Tel: 86-25-8473-2460
Fax: 86-25-8473-2470

China - Qingdao
Tel: 86-532-8502-7355
Fax: 86-532-8502-7205

China - Shanghai
Tel: 86-21-5407-5533
Fax: 86-21-5407-5066

China - Shenyang
Tel: 86-24-2334-2829
Fax: 86-24-2334-2393

China - Shenzhen
Tel: 86-755-8864-2200
Fax: 86-755-8203-1760

China - Wuhan
Tel: 86-27-5980-5300
Fax: 86-27-5980-5118

China - Xian
Tel: 86-29-8833-7252
Fax: 86-29-8833-7256

ASIA/PACIFIC

China - Xiamen
Tel: 86-592-2388138
Fax: 86-592-2388130

China - Zhuhai
Tel: 86-756-3210040
Fax: 86-756-3210049

India - Bangalore
Tel: 91-80-3090-4444
Fax: 91-80-3090-4123

India - New Delhi
Tel: 91-11-4160-8631
Fax: 91-11-4160-8632

India - Pune
Tel: 91-20-3019-1500

Japan - Osaka
Tel: 81-6-6152-7160
Fax: 81-6-6152-9310

Japan - Tokyo
Tel: 81-3-6880- 3770
Fax: 81-3-6880-3771

Korea - Daegu
Tel: 82-53-744-4301
Fax: 82-53-744-4302

Korea - Seoul
Tel: 82-2-554-7200
Fax: 82-2-558-5932 or
82-2-558-5934

Malaysia - Kuala Lumpur
Tel: 60-3-6201-9857
Fax: 60-3-6201-9859

Malaysia - Penang
Tel: 60-4-227-8870
Fax: 60-4-227-4068

Philippines - Manila
Tel: 63-2-634-9065
Fax: 63-2-634-9069

Singapore
Tel: 65-6334-8870
Fax: 65-6334-8850

Taiwan - Hsin Chu
Tel: 886-3-5778-366
Fax: 886-3-5770-955

Taiwan - Kaohsiung
Tel: 886-7-213-7828

Taiwan - Taipei
Tel: 886-2-2508-8600
Fax: 886-2-2508-0102

Thailand - Bangkok
Tel: 66-2-694-1351
Fax: 66-2-694-1350

EUROPE

Austria - Wels
Tel: 43-7242-2244-39
Fax: 43-7242-2244-393

Denmark - Copenhagen
Tel: 45-4450-2828
Fax: 45-4485-2829

France - Paris
Tel: 33-1-69-53-63-20
Fax: 33-1-69-30-90-79

Germany - Dusseldorf
Tel: 49-2129-3766400

Germany - Karlsruhe
Tel: 49-721-625370

Germany - Munich
Tel: 49-89-627-144-0
Fax: 49-89-627-144-44

Italy - Milan
Tel: 39-0331-742611
Fax: 39-0331-466781

Italy - Venice
Tel: 39-049-7625286

Netherlands - Drunen
Tel: 31-416-690399
Fax: 31-416-690340

Poland - Warsaw
Tel: 48-22-3325737

Spain - Madrid
Tel: 34-91-708-08-90
Fax: 34-91-708-08-91

Sweden - Stockholm
Tel: 46-8-5090-4654

UK - Wokingham
Tel: 44-118-921-5800
Fax: 44-118-921-5820

07/14/15

© 2011-2015 Microchip Technology Inc.