Obsolete Device
Please contact Microchip Sales for replacement information.

32 Mbit SPI Serial Flash
SST25VF032B

EOL Data Sheet

SST 25 series Serial Flash family features a four-wire, SPI-compatible interface that allows for a low pin-count package which occupies less board space and ultimately lowers total system costs. The SST25VF032B devices are enhanced with improved operating frequency which lowers power consumption. SST25VF032B SPI serial flash memories are manufactured with SST's proprietary, high-performance CMOS SuperFlash technology. The split-gate cell design and thick-oxide tunneling injector attain better reliability and manufacturability compared with alternate approaches.

Features

- **Single Voltage Read and Write Operations**
  - 2.7-3.6V
- **Serial Interface Architecture**
  - SPI Compatible: Mode 0 and Mode 3
- **High Speed Clock Frequency**
  - Up to 80 MHz
- **Superior Reliability**
  - Endurance: 100,000 Cycles
  - Greater than 100 years Data Retention
- **Low Power Consumption:**
  - Active Read Current: 10 mA (typical)
  - Standby Current: 5 µA (typical)
- **Flexible Erase Capability**
  - Uniform 4 KByte sectors
  - Uniform 32 KByte overlay blocks
  - Uniform 64 KByte overlay blocks
- **Fast Erase and Byte-Program:**
  - Chip-Erase Time: 35 ms (typical)
  - Sector-/Block-Erase Time: 18 ms (typical)
  - Byte-Program Time: 7 µs (typical)
- **Auto Address Increment (AAI) Word Programming**
  - Decrease total chip programming time over Byte-Program operations
- **End-of-Write Detection**
  - Software polling the BUSY bit in Status Register
  - Busy Status readout on SO pin
- **Hold Pin (HOLD#)**
  - Suspends a serial sequence to the memory without deselecting the device
- **Write Protection (WP#)**
  - Enables/Disables the Lock-Down function of the status register
- **Software Write Protection**
  - Write protection through Block-Protection bits in status register
- **Temperature Range**
  - Industrial: -40°C to +85°C
- **Packages Available**
  - 8-lead SOIC (200 mils)
  - 8-contact WSON (5 X 6 mm)
- **All devices are RoHS compliant**

Product Description

The SST 25 series Serial Flash family features a four-wire, SPI-compatible interface that allows for a low pin-count package which occupies less board space and ultimately lowers total system costs. SST25VF032B SPI serial flash memories are manufactured with SST's proprietary, high-performance CMOS SuperFlash technology. The split-gate cell design and thick-oxide tunneling injector attain better reliability and manufacturability compared with alternate approaches.

The SST25VF032B devices significantly improve performance and reliability, while lowering power consumption. The devices write (Program or Erase) with a single power supply of 2.7-3.6V for SST25VF032B. The total energy consumed is a function of the applied voltage, current, and time of application. Since for any given voltage range, the SuperFlash technology uses less current to program and has a shorter erase time, the total energy consumed during any Erase or Program operation is less than alternative flash memory technologies.

The SST25VF032B device is offered in 8-lead SOIC (200 mils) and 8-contact WSON packages. See Figure 2 for pin assignments.

Block Diagram

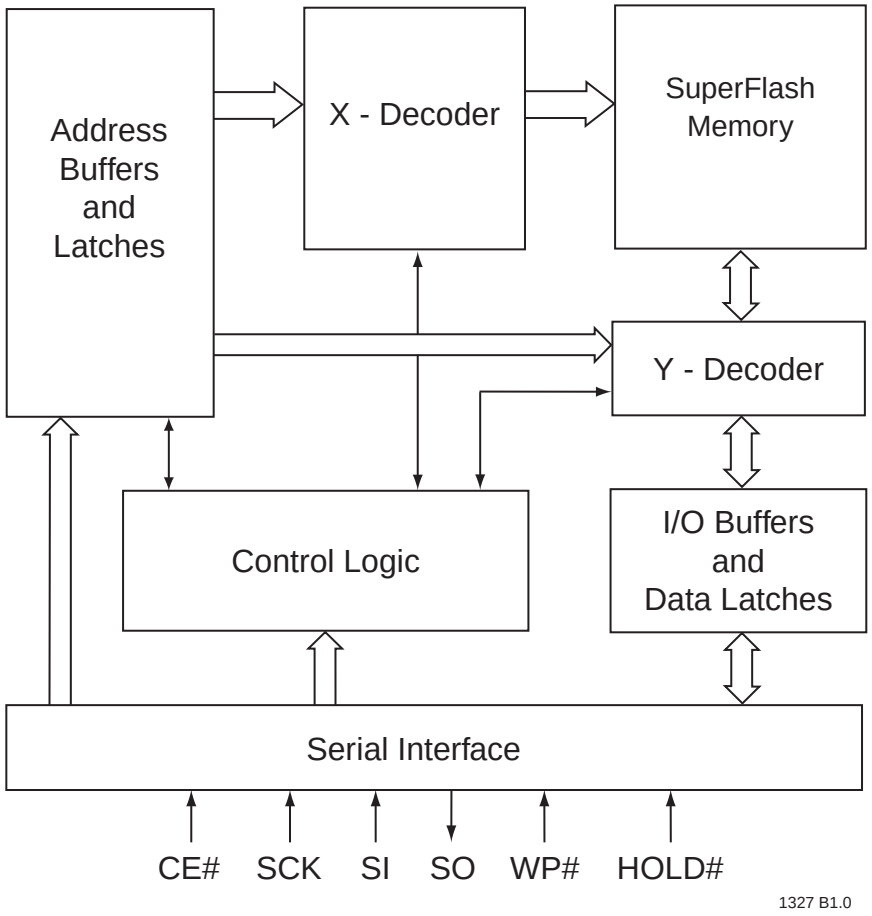

Note: In AAI mode, the SO pin can act as a RY/BY# pin when configured as a ready/busy status pin. See “End-of-Write Detection” on page 12. for details

Figure 1: Functional Block Diagram

Pin Description

Note: In AAI mode, the SO pin can act as a RY/BY# pin when configured as a ready/busy status pin. See “End-of-Write Detection” on page 12. for details.

Figure 2: Pin Assignments for 8-Lead SOIC

Table 1: Pin Description

Symbol	Pin Name	Functions
SCK	Serial Clock	To provide the timing of the serial interface. Commands, addresses, or input data are latched on the rising edge of the clock input, while output data is shifted out on the falling edge of the clock input.
SI	Serial Data Input	To transfer commands, addresses, or data serially into the device. Inputs are latched on the rising edge of the serial clock.
SO	Serial Data Output	To transfer data serially out of the device. Data is shifted out on the falling edge of the serial clock.
RY/BY#	Ready / Busy pin	Flash busy status pin in AAI mode if SO is configured as a hardware RY/BY# pin.
CE#	Chip Enable	The device is enabled by a high to low transition on CE#. CE# must remain low for the duration of any command sequence.
WP#	Write Protect	The Write Protect (WP#) pin is used to enable/disable BPL bit in the status register.
HOLD#	Hold	To temporarily stop serial communication with SPI flash memory without resetting the device.
V_{DD}	Power Supply	To provide power supply voltage: 2.7-3.6V
V_{SS}	Ground	

T1.0 20005071

Memory Organization

The SST25VF032B SuperFlash memory array is organized in uniform 4 KByte erasable sectors with 32 KByte overlay blocks and 64 KByte overlay erasable blocks.

Device Operation

The SST25VF032B is accessed through the SPI (Serial Peripheral Interface) bus compatible protocol. The SPI bus consist of four control lines; Chip Enable (CE#) is used to select the device, and data is accessed through the Serial Data Input (SI), Serial Data Output (SO), and Serial Clock (SCK).

The SST25VF032B supports both Mode 0 (0,0) and Mode 3 (1,1) of SPI bus operations. The difference between the two modes, as shown in Figure 3, is the state of the SCK signal when the bus master is in Stand-by mode and no data is being transferred. The SCK signal is low for Mode 0 and SCK signal is high for Mode 3. For both modes, the Serial Data In (SI) is sampled at the rising edge of the SCK clock signal and the Serial Data Output (SO) is driven after the falling edge of the SCK clock signal.

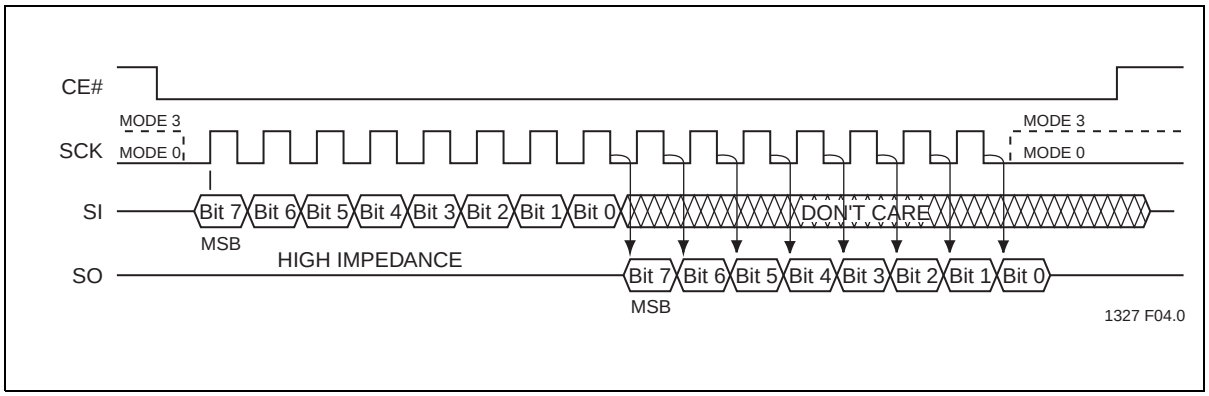

Figure 3: SPI Protocol

Hold Operation

The HOLD# pin is used to pause a serial sequence using the SPI flash memory, but without resetting the clocking sequence. To activate the HOLD# mode, CE# must be in active low state. The HOLD# mode begins when the SCK active low state coincides with the falling edge of the HOLD# signal. The HOLD mode ends when the HOLD# signal's rising edge coincides with the SCK active low state.

If the falling edge of the HOLD# signal does not coincide with the SCK active low state, then the device enters Hold mode when the SCK next reaches the active low state. Similarly, if the rising edge of the HOLD# signal does not coincide with the SCK active low state, then the device exits from Hold mode when the SCK next reaches the active low state. See Figure 4 for Hold Condition waveform.

Once the device enters Hold mode, SO will be in high-impedance state while SI and SCK can be V_{IL} or V_{IH}.

If CE# is driven high during a Hold condition, the device returns to Standby mode. As long as HOLD# signal is low, the memory remains in the Hold condition. To resume communication with the device, HOLD# must be driven active high, and CE# must be driven active low. See Figure 4 for Hold timing.

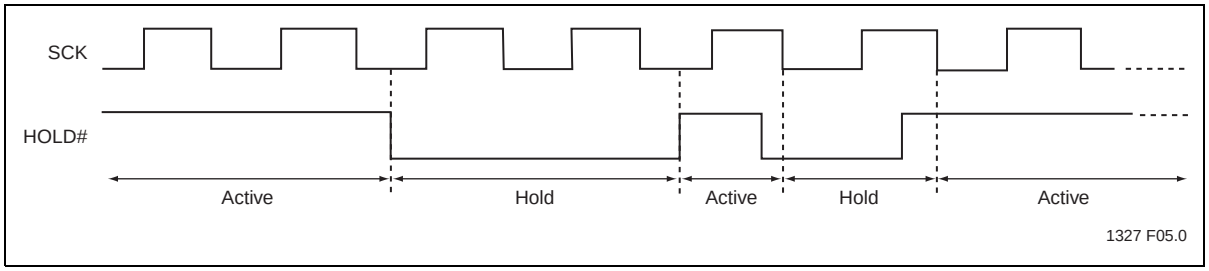

Figure 4: Hold Condition Waveform

Write Protection

SST25VF032B provides software Write protection. The Write Protect pin (WP#) enables or disables the lock-down function of the status register. The Block-Protection bits (BP3, BP2, BP1, BP0, and BPL) in the status register provide Write protection to the memory array and the status register. See Table 4 for the Block-Protection description.

Write Protect Pin (WP#)

The Write Protect (WP#) pin enables the lock-down function of the BPL bit (bit 7) in the status register. When WP# is driven low, the execution of the Write-Status-Register (WRSR) instruction is determined by the value of the BPL bit (see Table 2). When WP# is high, the lock-down function of the BPL bit is disabled.

Table 2: Conditions to execute Write-Status-Register (WRSR) Instruction

WP#	BPL	Execute WRSR Instruction
L	1	Not Allowed
L	0	Allowed
H	X	Allowed

T2.0 20005071

Status Register

The software status register provides status on whether the flash memory array is available for any Read or Write operation, whether the device is Write enabled, and the state of the Memory Write protection. During an internal Erase or Program operation, the status register may be read only to determine the completion of an operation in progress. Table 3 describes the function of each bit in the software status register.

Table 3: Software Status Register

Bit	Name	Function	Default at Power-up	Read/Write
0	BUSY	1 = Internal Write operation is in progress 0 = No internal Write operation is in progress	0	R
1	WEL	1 = Device is memory Write enabled 0 = Device is not memory Write enabled	0	R
2	BP0	Indicate current level of block write protection (See Table 4)	1	R/W
3	BP1	Indicate current level of block write protection (See Table 4)	1	R/W
4	BP2	Indicate current level of block write protection (See Table 4)	1	R/W
5	BP3	Indicate current level of block write protection (See Table 4)	0	R/W
6	AAI	Auto Address Increment Programming status 1 = AAI programming mode 0 = Byte-Program mode	0	R
7	BPL	1 = BP3, BP2, BP1, BP0 are read-only bits 0 = BP3, BP2, BP1, BP0 are readable/writable	0	R/W

T3.0 20005071

Busy

The Busy bit determines whether there is an internal Erase or Program operation in progress. A ‘1’ for the Busy bit indicates the device is busy with an operation in progress. A ‘0’ indicates the device is ready for the next valid operation.

Write Enable Latch (WEL)

The Write-Enable-Latch bit indicates the status of the internal memory Write Enable Latch. If the Write-Enable-Latch bit is set to ‘1’, it indicates the device is Write enabled. If the bit is set to ‘0’ (reset), it indicates the device is not Write enabled and does not accept any memory Write (Program/Erase) commands. The Write-Enable-Latch bit is automatically reset under the following conditions:

- Power-up
- Write-Disable (WRDI) instruction completion
- Byte-Program instruction completion
- Auto Address Increment (AAI) programming is completed or reached its highest unprotected memory address
- Sector-Erase instruction completion
- Block-Erase instruction completion
- Chip-Erase instruction completion
- Write-Status-Register instructions

Auto Address Increment (AAI)

The Auto Address Increment Programming-Status bit provides status on whether the device is in AAI programming mode or Byte-Program mode. The default at power up is Byte-Program mode.

Block Protection (BP3,BP2, BP1, BP0)

The Block-Protection (BP3, BP2, BP1, BP0) bits define the size of the memory area, as shown in Table 4, to be software protected against any memory Write (Program or Erase) operation. The Write-Status-Register (WRSR) instruction is used to program the BP3, BP2, BP1 and BP0 bits as long as WP# is high or the Block-Protect-Lock (BPL) bit is 0. Chip-Erase can only be executed if Block-Protection bits are all 0. After power-up, BP3, BP2, BP1 and BP0 are set to the defaults specified in Table 4.

Block Protection Lock-Down (BPL)

WP# pin driven low (V_{IL}), enables the Block-Protection-Lock-Down (BPL) bit. When BPL is set to 1, it prevents any further alteration of the BPL, BP3, BP2, BP1, and BP0 bits. When the WP# pin is driven high (V_{IH}), the BPL bit has no effect and its value is “Don’t Care”. After power-up, the BPL bit is reset to 0.

Table 4: Software Status Register Block Protection FOR SST25VF032B[1]

	Status Register Bit[2]				Protected Memory Address
Protection Level	**BP3**	**BP2**	**BP1**	**BP0**	**32 Mbit**
None	X	0	0	0	None
Upper 1/64	X	0	0	1	3F0000H-3FFFFFH
Upper 1/32	X	0	1	0	3E0000H-3FFFFFH
Upper 1/16	X	0	1	1	3C0000H-3FFFFFH
Upper 1/8	X	1	0	0	380000H-3FFFFFH
Upper 1/4	X	1	0	1	300000H-3FFFFFH
Upper 1/2	X	1	1	0	200000H-3FFFFFH
All Blocks	X	1	1	1	000000H-3FFFFFH

T4.0 20005071

1. X = Don’t Care (RESERVED) default is “0
2. Default at power-up for BP2, BP1, and BP0 is ‘111’. (All Blocks Protected)

Instructions

Instructions are used to read, write (Erase and Program), and configure the SST25VF032B. The instruction bus cycles are 8 bits each for commands (Op Code), data, and addresses. The Write-Enable (WREN) instruction must be executed prior any Byte-Program, Auto Address Increment (AAI) programming, Sector-Erase, Block-Erase, Write-Status-Register, or Chip-Erase instructions. The complete list of instructions is provided in Table 5.

All instructions are synchronized off a high to low transition of CE#. Inputs will be accepted on the rising edge of SCK starting with the most significant bit. CE# must be driven low before an instruction is entered and must be driven high after the last bit of the instruction has been shifted in (except for Read, Read-ID, and Read-Status-Register instructions). Any low to high transition on CE#, before receiving the last bit of an instruction bus cycle, will terminate the instruction in progress and return the device to standby mode. Instruction commands (Op Code), addresses, and data are all input from the most significant bit (MSB) first.

Table 5: Device Operation Instructions (1 of 2)

Instruction	Description	Op Code Cycle[1]	Address Cycle(s)[2]	Dummy Cycle(s)	Data Cycle(s)	Maximum Frequency
Read	Read Memory	0000 0011b (03H)	3	0	1 to ∞	25 MHz
High-Speed Read	Read Memory at higher speed	0000 1011b (0BH)	3	1	1 to ∞	80 MHz
4 KByte Sector-Erase[3]	Erase 4 KByte of memory array	0010 0000b (20H)	3	0	0	80 MHz
32 KByte Block-Erase[4]	Erase 32KByte block of memory array	0101 0010b (52H)	3	0	0	80 MHz
64 KByte Block-Erase[5]	Erase 64 KByte block of memory array	1101 1000b (D8H)	3	0	0	80 MHz
Chip-Erase	Erase Full Memory Array	0110 0000b (60H) or 1100 0111b (C7H)	0	0	0	80 MHz
Byte-Program	To Program One Data Byte	0000 0010b (02H)	3	0	1	80 MHz
AAI-Word-Program[6]	Auto Address Increment Programming	1010 1101b (ADH)	3	0	2 to ∞	80 MHz
RDSR[7]	Read-Status-Register	0000 0101b (05H)	0	0	1 to ∞	80 MHz
EWSR	Enable-Write-Status-Register	0101 0000b (50H)	0	0	0	80 MHz
WRSR	Write-Status-Register	0000 0001b (01H)	0	0	1	80 MHz
WREN	Write-Enable	0000 0110b (06H)	0	0	0	80 MHz
WRDI	Write-Disable	0000 0100b (04H)	0	0	0	80 MHz
RDID[8]	Read-ID	1001 0000b (90H) or 1010 1011b (ABH)	3	0	1 to ∞	80 MHz
JEDEC-ID	JEDEC ID read	1001 1111b (9FH)	0	0	3 to ∞	80 MHz

Table 5: Device Operation Instructions (Continued) (2 of 2)

Instruction	Description	Op Code Cycle[1]	Address Cycle(s)[2]	Dummy Cycle(s)	Data Cycle(s)	Maximum Frequency
EBSY	Enable SO as an output RY/BY# status during AAI programming	0111 0000b (70H)	0	0	0	80 MHz
DBSY	Disable SO as RY/BY# status during AAI programming	1000 0000b (80H)	0	0	0	80 MHz

T5.0 20005071

1. One bus cycle is eight clock periods.
2. Address bits above the most significant bit can be either V_{IL} or V_{IH}.
3. 4KByte Sector Erase addresses: use A_{MS}-A_{12}, remaining addresses are don't care but must be set either at V_{IL} or V_{IH}.
4. 32KByte Block Erase addresses: use A_{MS}-A_{15}, remaining addresses are don't care but must be set either at V_{IL} or V_{IH}.
5. 64KByte Block Erase addresses: use A_{MS}-A_{16}, remaining addresses are don't care but must be set either at V_{IL} or V_{IH}.
6. To continue programming to the next sequential address location, enter the 8-bit command, ADH, followed by 2 bytes of data to be programmed. Data Byte 0 will be programmed into the initial address [A_{23}-A_1] with A_0=0, Data Byte 1 will be programmed into the
initial address [A_{23}-A_1] with A_0 = 1.
7. The Read-Status-Register is continuous with ongoing clock cycles until terminated by a low to high transition on CE#.
8. Manufacturer's ID is read with A_0 = 0, and Device ID is read with A_0 = 1. All other address bits are 00H. The Manufacturer's ID and device ID output stream is continuous until terminated by a low-to-high transition on CE#.

Read (25 MHz)

The Read instruction, 03H, supports up to 25 MHz Read. The device outputs the data starting from the specified address location. The data output stream is continuous through all addresses until terminated by a low to high transition on CE#. The internal address pointer will automatically increment until the highest memory address is reached. Once the highest memory address is reached, the address pointer will automatically increment to the beginning (wrap-around) of the address space. For example, once the data from address location 3FFFFFH has been read, the next output will be from address location 000000H.

The Read instruction is initiated by executing an 8-bit command, 03H, followed by address bits [A_{23}-A_0]. CE# must remain active low for the duration of the Read cycle. See Figure 5 for the Read sequence.

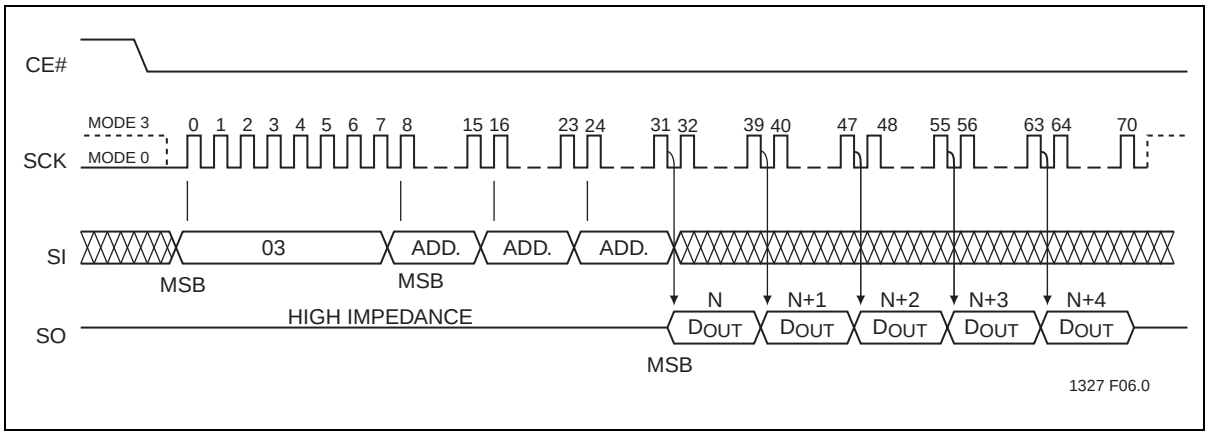

Figure 5: Read Sequence

High-Speed-Read (80 MHz)

The High-Speed-Read instruction supporting up to 80 MHz Read is initiated by executing an 8-bit command, 0BH, followed by address bits [A_{23}-A_0] and a dummy byte. CE# must remain active low for the duration of the High-Speed-Read cycle. See Figure 6 for the High-Speed-Read sequence.

Following a dummy cycle, the High-Speed-Read instruction outputs the data starting from the specified address location. The data output stream is continuous through all addresses until terminated by a low to high transition on CE#. The internal address pointer will automatically increment until the highest memory address is reached. Once the highest memory address is reached, the address pointer will automatically increment to the beginning (wrap-around) of the address space. For example, once the data from address location 3FFFFFH has been read, the next output will be from address location 000000H.

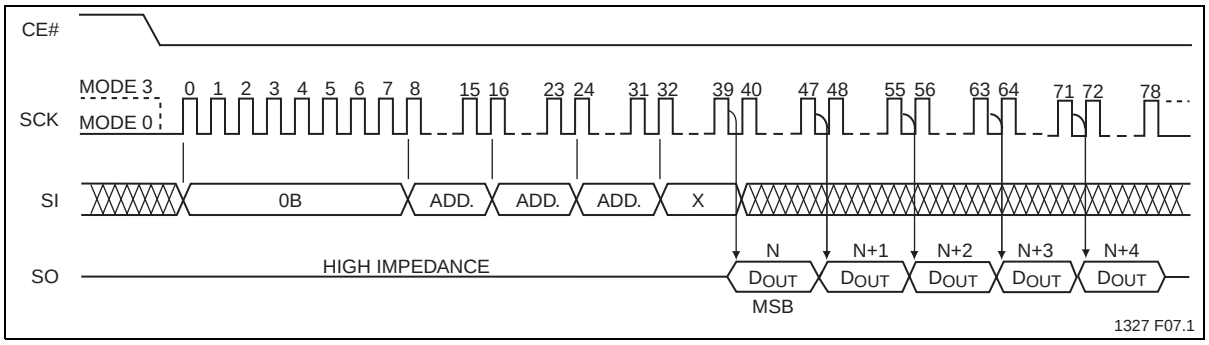

Figure 6: High-Speed-Read Sequence

Byte-Program

The Byte-Program instruction programs the bits in the selected byte to the desired data. The selected byte must be in the erased state (FFH) when initiating a Program operation. A Byte-Program instruction applied to a protected memory area will be ignored.

Prior to any Write operation, the Write-Enable (WREN) instruction must be executed. CE# must remain active low for the duration of the Byte-Program instruction. The Byte-Program instruction is initiated by executing an 8-bit command, 02H, followed by address bits [A_{23}-A_0]. Following the address, the data is input in order from MSB (bit 7) to LSB (bit 0). CE# must be driven high before the instruction is executed. The user may poll the Busy bit in the software status register or wait T_{BP} for the completion of the internal self-timed Byte-Program operation. See Figure 7 for the Byte-Program sequence.

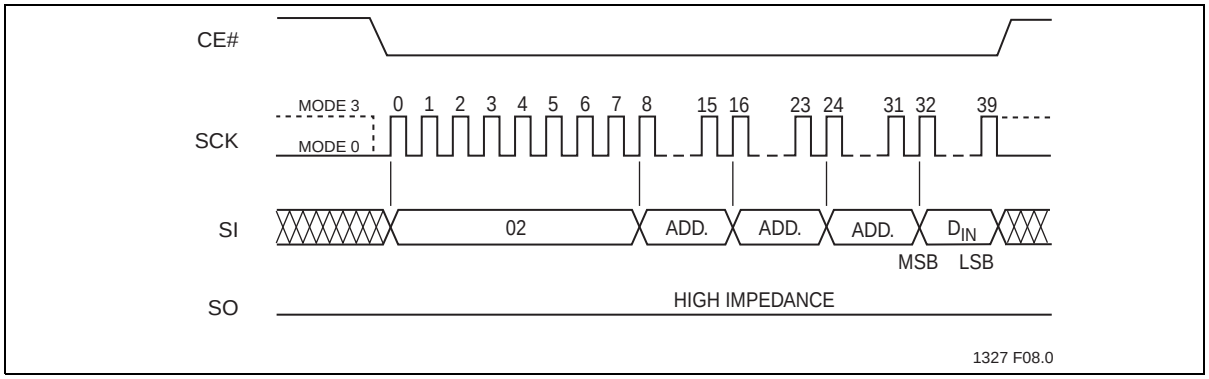

Figure 7: Byte-Program Sequence

Auto Address Increment (AAI) Word-Program

The AAI program instruction allows multiple bytes of data to be programmed without re-issuing the next sequential address location. This feature decreases total programming time when multiple bytes or entire memory array is to be programmed. An AAI Word program instruction pointing to a protected memory area will be ignored. The selected address range must be in the erased state (FFH) when initiating an AAI Word Program operation. While within AAI Word Programming sequence, only the following instructions are valid: for software end-of-write detection—AAI Word (ADH), WRDI (04H), and RDSR (05H); for hardware end-of-write detection—AAI Word (ADH) and WRDI (04H). There are three options to determine the completion of each AAI Word program cycle: hardware detection by reading the Serial Output, software detection by polling the BUSY bit in the software status register, or wait $T_{BP.}$ Refer to“End-of-Write Detection” for details.

Prior to any write operation, the Write-Enable (WREN) instruction must be executed. Initiate the AAI Word Program instruction by executing an 8-bit command, ADH, followed by address bits [A_{23}-A_0]. Following the addresses, two bytes of data are input sequentially, each one from MSB (Bit 7) to LSB (Bit 0). The first byte of data (D0) is programmed into the initial address [A_{23}-A_1] with A_0=0, the second byte of Data (D1) is programmed into the initial address [A_{23}-A_1] with A_0=1. CE# must be driven high before executing the AAI Word Program instruction. Check the BUSY status before entering the next valid command. Once the device indicates it is no longer busy, data for the next two sequential addresses may be programmed, followed by the next two, and so on.

When programming the last desired word, or the highest unprotected memory address, check the busy status using either the hardware or software (RDSR instruction) method to check for program completion. Once programming is complete, use the applicable method to terminate AAI. If the device is in Software End-of-Write Detection mode, execute the Write-Disable (WRDI) instruction, 04H. If the device is in AAI Hardware End-of-Write Detection mode, execute the Write-Disable (WRDI) instruction, 04H, followed by the 8-bit DBSY command, 80H. There is no wrap mode during AAI programming once the highest unprotected memory address is reached. See Figures 10 and 11 for the AAI Word programming sequence.

End-of-Write Detection

There are three methods to determine completion of a program cycle during AAI Word programming: hardware detection by reading the Serial Output, software detection by polling the BUSY bit in the Software Status Register, or wait $T_{BP.}$ The Hardware End-of-Write detection method is described in the section below.

Hardware End-of-Write Detection

The Hardware End-of-Write detection method eliminates the overhead of polling the Busy bit in the Software Status Register during an AAI Word program operation. The 8-bit command, 70H, configures the Serial Output (SO) pin to indicate Flash Busy status during AAI Word programming. (see Figure 8) The 8-bit command, 70H, must be executed prior to initiating an AAI Word-Program instruction. Once an internal programming operation begins, asserting CE# will immediately drive the status of the internal flash status on the SO pin. A ‘0’ indicates the device is busy and a ‘1’ indicates the device is ready for the next instruction. De-asserting CE# will return the SO pin to tri-state. While in AAI and Hardware End-of-Write detection mode, the only valid instructions are AAI Word (ADH) and WRDI (04H).

To exit AAI Hardware End-of-Write detection, first execute WRDI instruction, 04H, to reset the Write-Enable-Latch bit (WEL=0) and AAI bit. Then execute the 8-bit DBSY command, 80H, to disable RY/BY# status during the AAI command. See Figures 9 and 10.

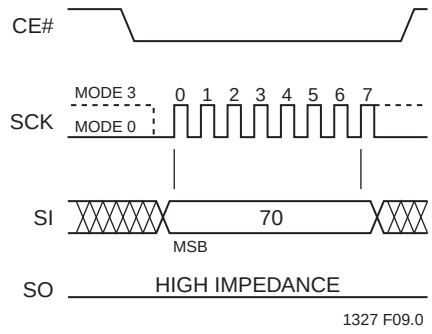

Figure 8: Enable SO as Hardware RY/BY# During AAI Programming

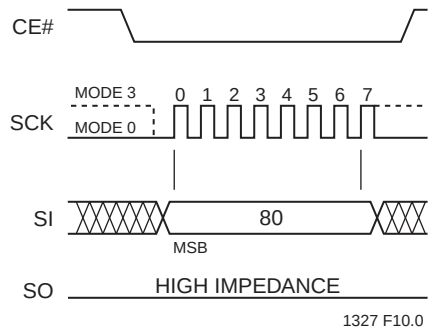

Figure 9: Disable SO as Hardware RY/BY# During AAI Programming

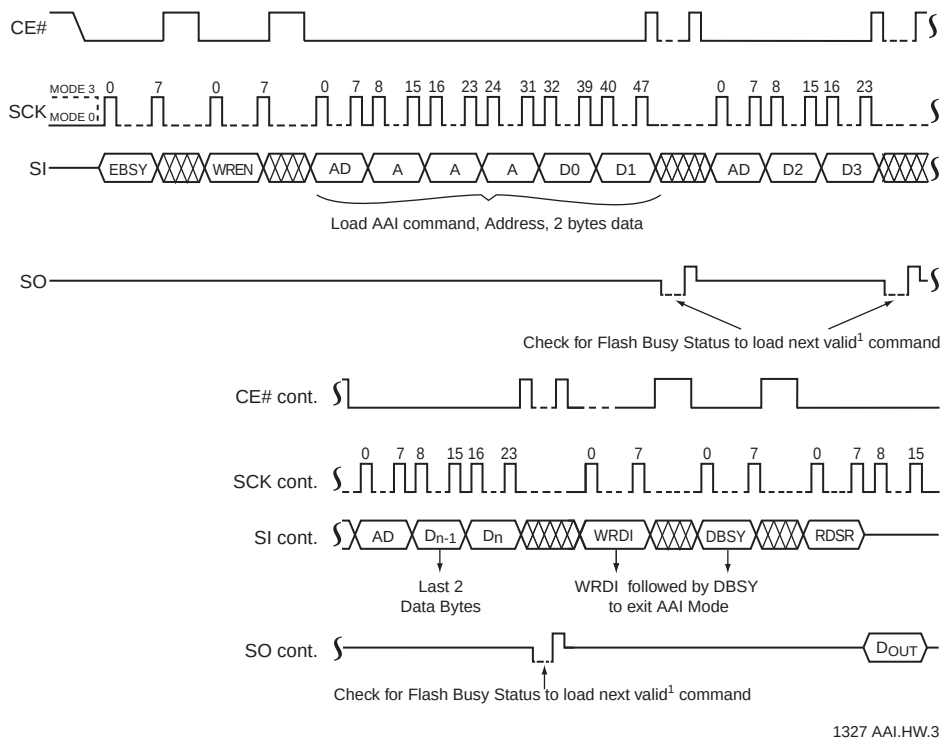

Note: 1. Valid commands during AAI programming: AAI command or WRDI command
2. User must configure the SO pin to output Flash Busy status during AAI programming

Figure 10: Auto Address Increment (AAI) Word-Program Sequence with Hardware End-of-Write Detection

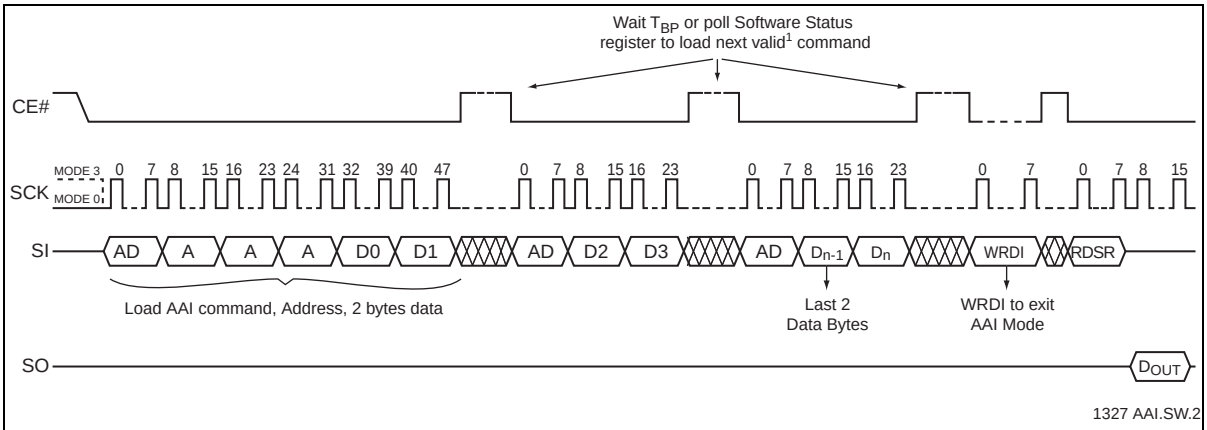

Note: 1. Valid commands during AAI programming: AAI command or WRDI command

Figure 11: Auto Address Increment (AAI) Word-Program Sequence with Software End-of-Write Detection

Sector-Erase

The Sector-Erase instruction clears all bits in the selected 4 KByte sector to FFH. A Sector-Erase instruction applied to a protected memory area will be ignored. Prior to any Write operation, the Write-Enable (WREN) instruction must be executed. CE# must remain active low for the duration of any command sequence. The Sector-Erase instruction is initiated by executing an 8-bit command, 20H, followed by address bits [A_{23}-A_0]. Address bits [A_{MS}-A_{12}] (A_{MS} = Most Significant address) are used to determine the sector address (SA_X), remaining address bits can be V_{IL} or $V_{IH.}$ CE# must be driven high before the instruction is executed. Poll the Busy bit in the software status register or wait T_{SE} for the completion of the internal self-timed Sector-Erase cycle. See Figure 12 for the Sector-Erase sequence.

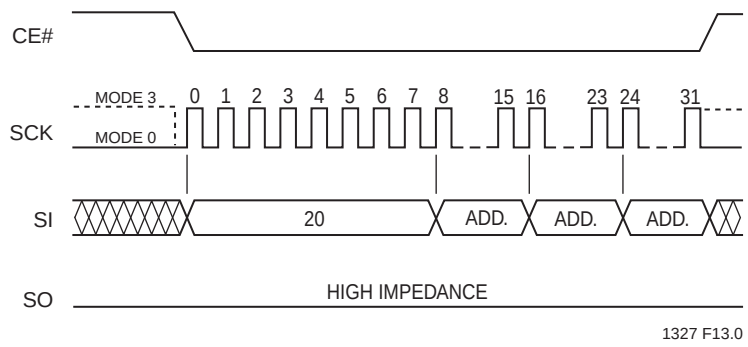

Figure 12: Sector-Erase Sequence

32-KByte and 64-KByte Block-Erase

The 32-KByte Block-Erase instruction clears all bits in the selected 32 KByte block to FFH. A Block-Erase instruction applied to a protected memory area will be ignored. The 64-KByte Block-Erase instruction clears all bits in the selected 64 KByte block to FFH. A Block-Erase instruction applied to a protected memory area will be ignored. Prior to any Write operation, the Write-Enable (WREN) instruction must be executed. CE# must remain active low for the duration of any command sequence. The 32-KByte Block-Erase instruction is initiated by executing an 8-bit command, 52H, followed by address bits [A_{23}-A_0]. Address bits [A_{MS}-A_{15}] (A_{MS} = Most Significant Address) are used to determine block address (BA_X), remaining address bits can be V_{IL} or $V_{IH.}$ CE# must be driven high before the instruction is executed. The 64-KByte Block-Erase instruction is initiated by executing an 8-bit command D8H, followed by address bits [A_{23}-A_0]. Address bits [A_{MS}-A_{16}] are used to determine block address (BA_X), remaining address bits can be V_{IL} or $V_{IH.}$ CE# must be driven high before the instruction is executed. Poll the Busy bit in the software status register or wait T_{BE} for the completion of the internal self-timed 32-KByte Block-Erase or 64-KByte Block-Erase cycles. See Figure 13 for the 32-KByte Block-Erase sequence and Figure 14 for the 64-KByte Block-Erase sequence.

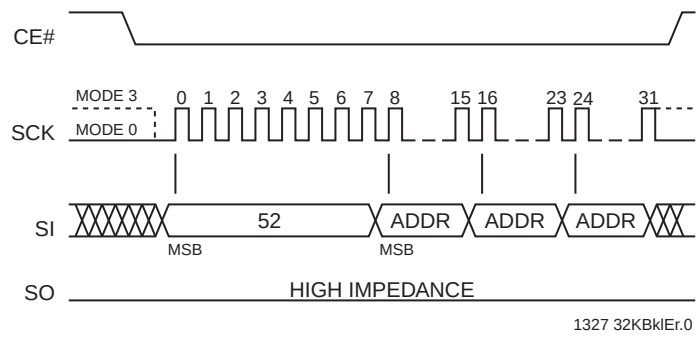

Figure 13: 32-KByte Block-Erase Sequence

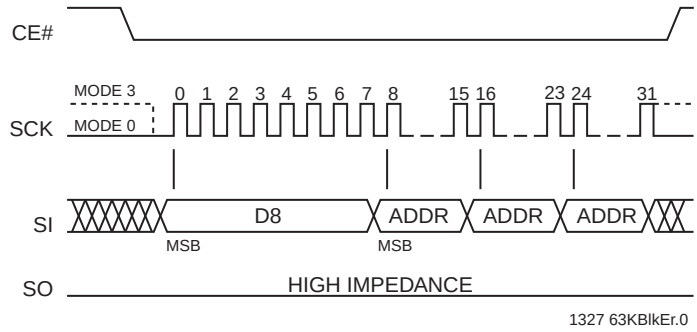

Figure 14: 64-KByte Block-Erase Sequence

Chip-Erase

The Chip-Erase instruction clears all bits in the device to FFH. A Chip-Erase instruction will be ignored if any of the memory area is protected. Prior to any Write operation, the Write-Enable (WREN) instruction must be executed. CE# must remain active low for the duration of the Chip-Erase instruction sequence. Initiate the Chip-Erase instruction by executing an 8-bit command, 60H or C7H. CE# must be driven high before the instruction is executed. Poll the Busy bit in the software status register or wait T_{CE} for the completion of the internal self-timed Chip-Erase cycle. See Figure 15 for the Chip-Erase sequence.

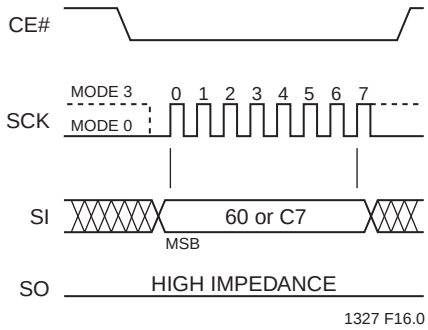

Figure 15: Chip-Erase Sequence

Read-Status-Register (RDSR)

The Read-Status-Register (RDSR) instruction allows reading of the status register. The status register may be read at any time even during a Write (Program/Erase) operation. When a Write operation is in progress, the Busy bit may be checked before sending any new commands to assure that the new commands are properly received by the device. CE# must be driven low before the RDSR instruction is entered and remain low until the status data is read. Read-Status-Register is continuous with ongoing clock cycles until it is terminated by a low to high transition of the CE#. See Figure 16 for the RDSR instruction sequence.

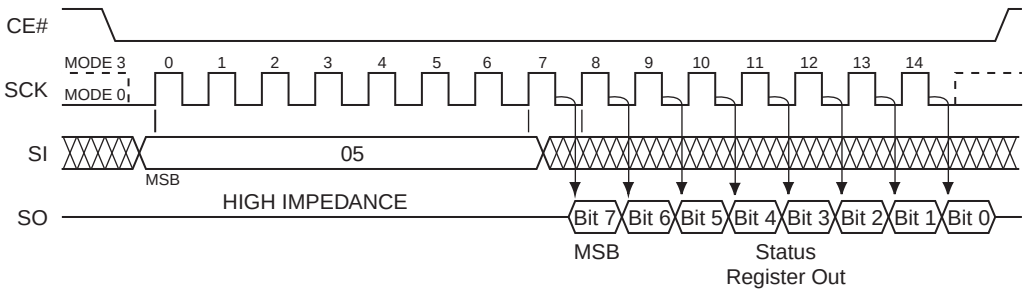

Figure 16: Read-Status-Register (RDSR) Sequence

Write-Enable (WREN)

The Write-Enable (WREN) instruction sets the Write-Enable-Latch bit in the Status Register to '1' allowing Write operations to occur. The WREN instruction must be executed prior to any Write (Program/Erase) operation. The WREN instruction may also be used to allow execution of the Write-Status-Register (WRSR) instruction; however, the Write-Enable-Latch bit in the Status Register will be cleared upon the rising edge CE# of the WRSR instruction. CE# must be driven high before the WREN instruction is executed.

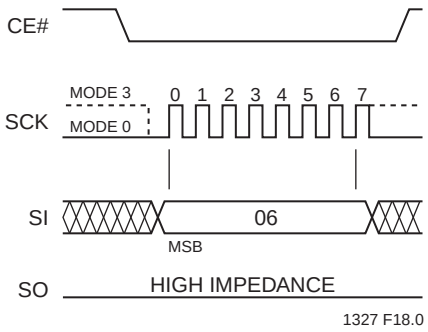

Figure 17: Write Enable (WREN) Sequence

Write-Disable (WRDI)

The Write-Disable (WRDI) instruction resets the Write-Enable-Latch bit and AAI bit to '0,' therefore, preventing any new Write operations. The WRDI instruction will not terminate any programming operation in progress. Any program operation in progress may continue up to T_{BP} after executing the WRDI instruction. CE# must be driven high before the WRDI instruction is executed.

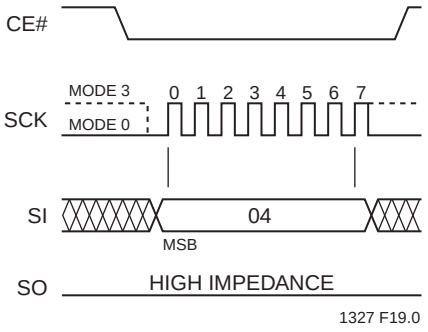

Figure 18: Write Disable (WRDI) Sequence

Enable-Write-Status-Register (EWSR)

The Enable-Write-Status-Register (EWSR) instruction arms the Write-Status-Register (WRSR) instruction and opens the status register for alteration. The Write-Status-Register instruction must be executed immediately after the execution of the Enable-Write-Status-Register instruction. This two-step instruction sequence of the EWSR instruction followed by the WRSR instruction works like software data protection (SDP) command structure which prevents any accidental alteration of the status register values. CE# must be driven low before the EWSR instruction is entered and must be driven high before the EWSR instruction is executed.

Write-Status-Register (WRSR)

The Write-Status-Register instruction writes new values to the BP3, BP2, BP1, BP0, and BPL bits of the status register. CE# must be driven low before the command sequence of the WRSR instruction is entered and driven high before the WRSR instruction is executed. See Figure 19 for EWSR or WREN and WRSR instruction sequences.

Executing the Write-Status-Register instruction will be ignored when WP# is low and BPL bit is set to ‘1’. When the WP# is low, the BPL bit can only be set from ‘0’ to ‘1’ to lock-down the status register, but cannot be reset from ‘1’ to ‘0’. When WP# is high, the lock-down function of the BPL bit is disabled and the BPL, BP0, and BP1 and BP2 bits in the status register can all be changed. As long as BPL bit is set to ‘0’ or WP# pin is driven high (V_{IH}) prior to the low-to-high transition of the CE# pin at the end of the WRSR instruction, the bits in the status register can all be altered by the WRSR instruction. In this case, a single WRSR instruction can set the BPL bit to ‘1’ to lock down the status register as well as altering the BP0, BP1, and BP2 bits at the same time. See Table 2 for a summary description of WP# and BPL functions.

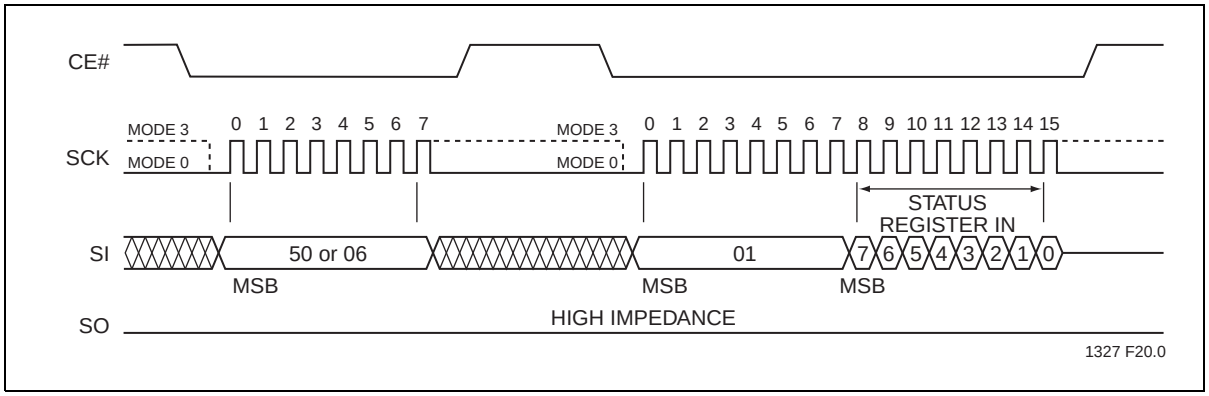

Figure 19: Enable-Write-Status-Register (EWSR) or Write-Enable (WREN) and Write-Status-Register (WRSR) Sequence

Read-ID (RDID)

The Read-ID instruction (RDID) identifies the device as SST25VF032B and manufacturer as SST. The device information can be read from executing an 8-bit command, 90H or ABH, followed by address bits [A_{23}-A_0]. Following the Read-ID instruction, the manufacturer's ID is located in address 00000H and the device ID is located in address 00001H. Once the device is in Read-ID mode, the manufacturer's and device ID output data toggles between address 00000H and 00001H until terminated by a low to high transition on CE#.

Refer to Tables 6 and 7 for device identification data.

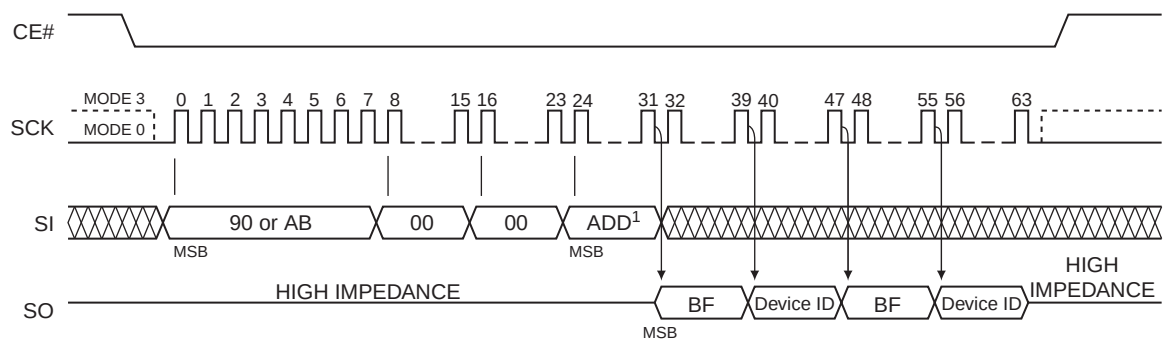

Note: The manufacturer's and device ID output stream is continuous until terminated by a low to high transition on CE#.
1. 00H will output the manfacturer's ID first and 01H will output device ID first before toggling between the two.

1327 F21.0

Figure 20: Read-ID Sequence

Table 6: Product Identification

	Address	Data
Manufacturer's ID	00000H	BFH
Device ID SST25VF032B	00001H	4AH

T6.0 20005071

JEDEC Read-ID

The JEDEC Read-ID instruction identifies the device as SST25VF032B and the manufacturer as SST. The device information can be read from executing the 8-bit command, 9FH. Following the JEDEC Read-ID instruction, the 8-bit manufacturer's ID, BFH, is output from the device. After that, a 24-bit device ID is shifted out on the SO pin. Byte 1, BFH, identifies the manufacturer as SST. Byte 2, 25H, identifies the memory type as SPI Serial Flash. Byte 3, 4AH, identifies the device as SST25VF032B. The instruction sequence is shown in Figure 21. The JEDEC Read ID instruction is terminated by a low to high transition on CE# at any time during data output.

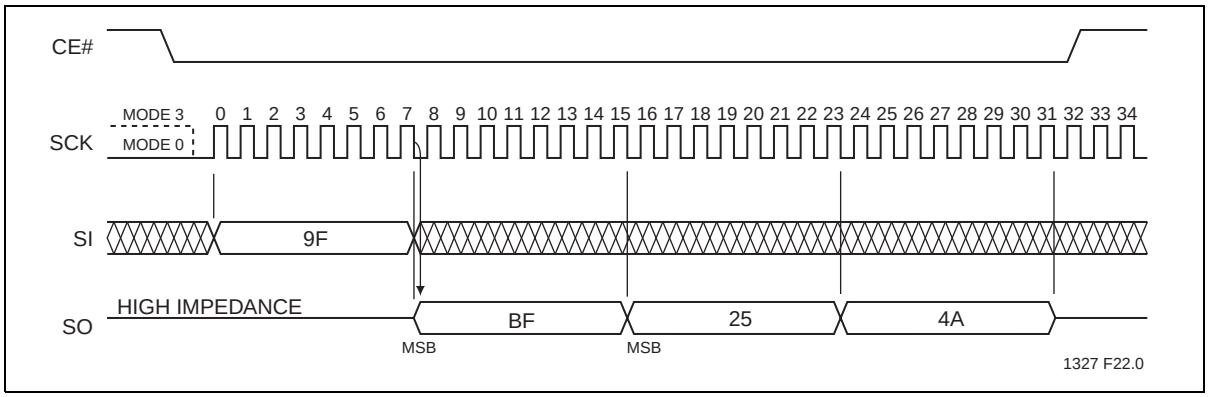

Figure 21: JEDEC Read-ID Sequence

Table 7: JEDEC Read-ID Data

Manufacturer's ID	Device ID	
	Memory Type	Memory Capacity
Byte1	Byte 2	Byte 3
BFH	25H	4AH

T7.0 20005071

Electrical Specifications

Absolute Maximum Stress Ratings Applied conditions greater than those listed under “Absolute Maximum Stress Ratings” may cause permanent damage to the device. This is a stress rating only and functional operation of the device at these conditions or conditions greater than those defined in the operational sections of this data sheet is not implied. Exposure to absolute maximum stress rating conditions may affect device reliability.

Temperature Under Bias . . . . . -55°C to +125°C
Storage Temperature . . . . . -65°C to +150°C
D. C. Voltage on Any Pin to Ground Potential . . . . . -0.5V to V_{DD}+0.5V
Transient Voltage (<20 ns) on Any Pin to Ground Potential . . . . . -2.0V to V_{DD}+2.0V
Package Power Dissipation Capability (T_A = 25°C) 1.0W
Surface Mount Solder Reflow Temperature . . . . . 260°C for 10 seconds
Output Short Circuit Current[1]. . . . . 50 mA

1. Output shorted for no more than one second. No more than one output shorted at a time.

Table 8: Operating Range

Range	Ambient Temp	V_{DD}
Industrial	-40°C to +85°C	2.7-3.6V

T8.1 20005071

Table 9: AC Conditions of Test[1]

Input Rise/Fall Time	Output Load
5ns	C_L = 30 pF

T9.1 20005071

1. See Figure 26

Table 10: DC Operating Characteristics (VDD = 2.7-3.6V)

Symbol	Parameter	Limits			Test Conditions
		Min	Max	Units	
I_{DDR}	Read Current		10	mA	CE# = 0.1 V_{DD}/0.9 V_{DD}@25 MHz, SO = open
I_{DDR2}	Read Current		20	mA	CE# = 0.1 V_{DD}/0.9 V_{DD}@66 MHz, SO = open
I_{DDR3}	Read Current		25	mA	CE# = 0.1 V_{DD}/0.9 V_{DD}@80 MHz, SO = open
I_{DDW}	Program and Erase Current		30	mA	CE# = V_{DD}
I_{SB}	Standby Current		20	µA	CE# = V_{DD}, V_{IN} = V_{DD} or V_{SS}
I_{LI}	Input Leakage Current		1	µA	V_{IN} = GND to V_{DD}, V_{DD} = V_{DD} Max
I_{LO}	Output Leakage Current		1	µA	V_{OUT} = GND to V_{DD}, V_{DD} = V_{DD} Max
V_{IL}	Input Low Voltage		0.8	V	V_{DD} = V_{DD} Min
V_{IH}	Input High Voltage	0.7 V_{DD}		V	V_{DD} = V_{DD} Max
V_{OL}	Output Low Voltage		0.2	V	I_{OL} = 100 µA, V_{DD} = V_{DD} Min
V_{OL2}	Output Low Voltage		0.4	V	I_{OL} = 1.6 mA, V_{DD} = V_{DD} Min
V_{OH}	Output High Voltage	V_{DD}-0.2		V	I_{OH} = -100 µA, V_{DD} = V_{DD} Min

T10.0 20005071

Table 11: Capacitance (T_A = 25°C, f = 1 MHz, other pins open)

Parameter	Description	Test Condition	Maximum
C_{OUT}[1]	Output Pin Capacitance	V_{OUT} = 0V	12 pF
C_{IN}[1]	Input Capacitance	V_{IN} = 0V	6 pF

T11.0 20005071

1. This parameter is measured only for initial qualification and after a design or process change that could affect this parameter.

Table 12: Reliability Characteristics

Symbol	Parameter	Minimum Specification	Units	Test Method
N_{END}[1]	Endurance	100,000	Cycles	JEDEC Standard A117
T_{DR}[1]	Data Retention	100	Years	JEDEC Standard A103
I_{LTH}[1]	Latch Up	100 + I_{DD}	mA	JEDEC Standard 78

T12.0 20005071

1. This parameter is measured only for initial qualification and after a design or process change that could affect this parameter.

Table 13: AC Operating Characteristics

Symbol	Parameter	25 MHz		66 MHz		80 MHz		Units
		Min	Max	Min	Max	Min	Max	
F_{CLK}[1]	Serial Clock Frequency		25		66		80	MHz
T_{SCKH}	Serial Clock High Time	18		6.5		6		ns
T_{SCKL}	Serial Clock Low Time	18		6.5		6		ns
T_{SCKR}[2]	Serial Clock Rise Time (Slew Rate)	0.1		0.1		0.1		V/ns
T_{SCKF}	Serial Clock Fall Time (Slew Rate)	0.1		0.1		0.1		V/ns
T_{CES}[3]	CE# Active Setup Time	10		5		5		ns
T_{CEH}[3]	CE# Active Hold Time	10		5		5		ns
T_{CHS}[3]	CE# Not Active Setup Time	10		5		5		ns
T_{CHH}[3]	CE# Not Active Hold Time	10		5		5		ns
T_{CPH}	CE# High Time	100		50		50		ns
T_{CHZ}	CE# High to High-Z Output		15		7		7	ns
T_{CLZ}	SCK Low to Low-Z Output	0		0		0		ns
T_{DS}	Data In Setup Time	5		2		2		ns
T_{DH}	Data In Hold Time	5		4		4		ns
T_{HLS}	HOLD# Low Setup Time	10		5		5		ns
T_{HHS}	HOLD# High Setup Time	10		5		5		ns
T_{HLH}	HOLD# Low Hold Time	10		5		5		ns
T_{HHH}	HOLD# High Hold Time	10		5		5		ns
T_{HZ}	HOLD# Low to High-Z Output		20		7		7	ns
T_{LZ}	HOLD# High to Low-Z Output		15		7		7	ns
T_{OH}	Output Hold from SCK Change	0		0		0		ns
T_V	Output Valid from SCK		15		6		6	ns
T_{SE}	Sector-Erase		25		25		25	ms
T_{BE}	Block-Erase		25		25		25	ms
T_{SCE}	Chip-Erase		50		50		50	ms
T_{BP}[4]	Byte-Program		10		10		10	µs

T13.0 20005071

1. Maximum clock frequency for Read Instruction, 03H, is 25 MHz
2. Maximum Rise and Fall time may be limited by T_{SCKH} and T_{SCKL} requirements
3. Relative to SCK.
4. TBP of AAI-Word Programming is also 10 µs maximum time.

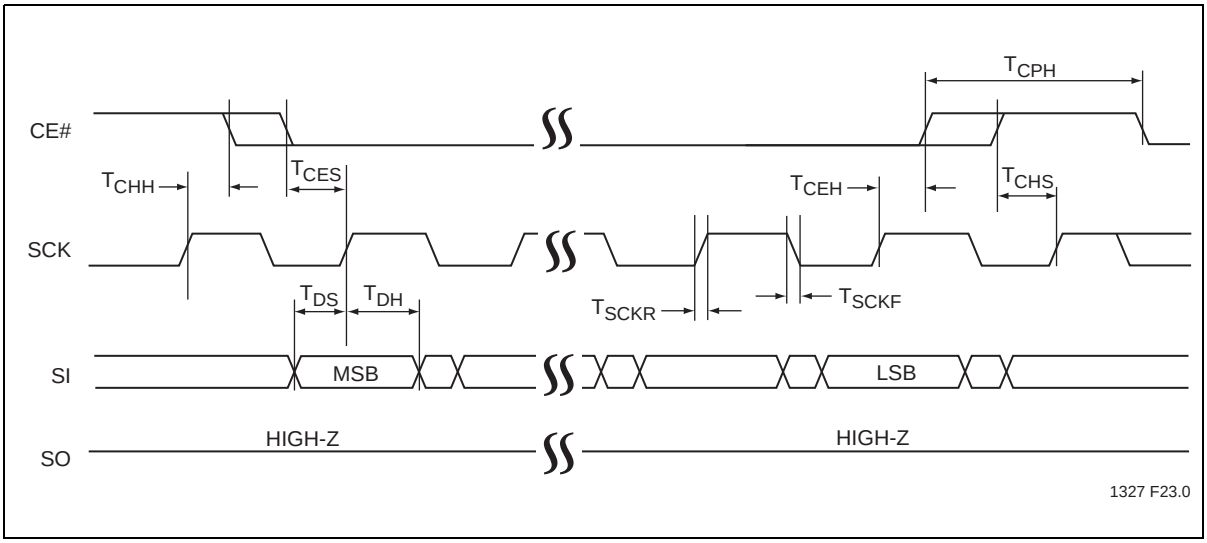

Figure 22: Serial Input Timing Diagram

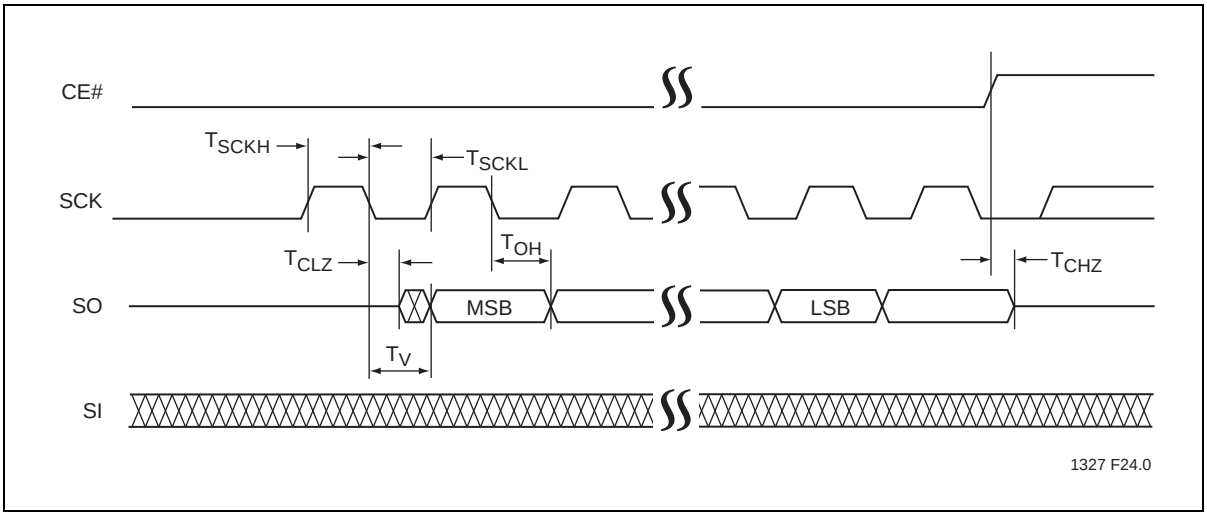

Figure 23: Serial Output Timing Diagram

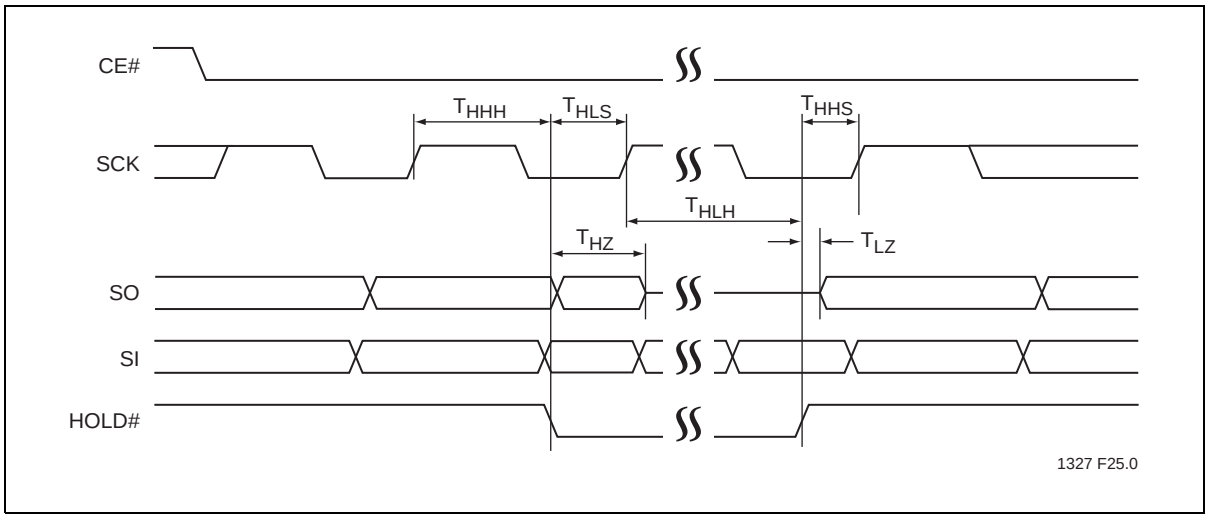

Figure 24: Hold Timing Diagram

Power-Up Specifications

All functionalities and DC specifications are specified for a V_{DD} ramp rate of greater than 1V per 100 ms (0v - 3.0V in less than 300 ms). See Table 14 and Figure 25 for more information.

Table 14: Recommended System Power-up Timings

Symbol	Parameter	Minimum	Units
$T_{PU-READ}$[1]	V_{DD} Min to Read Operation	100	µs
$T_{PU-WRITE}$[1]	V_{DD} Min to Write Operation	100	µs

T14.0 20005071

1. This parameter is measured only for initial qualification and after a design or process change that could affect this parameter.

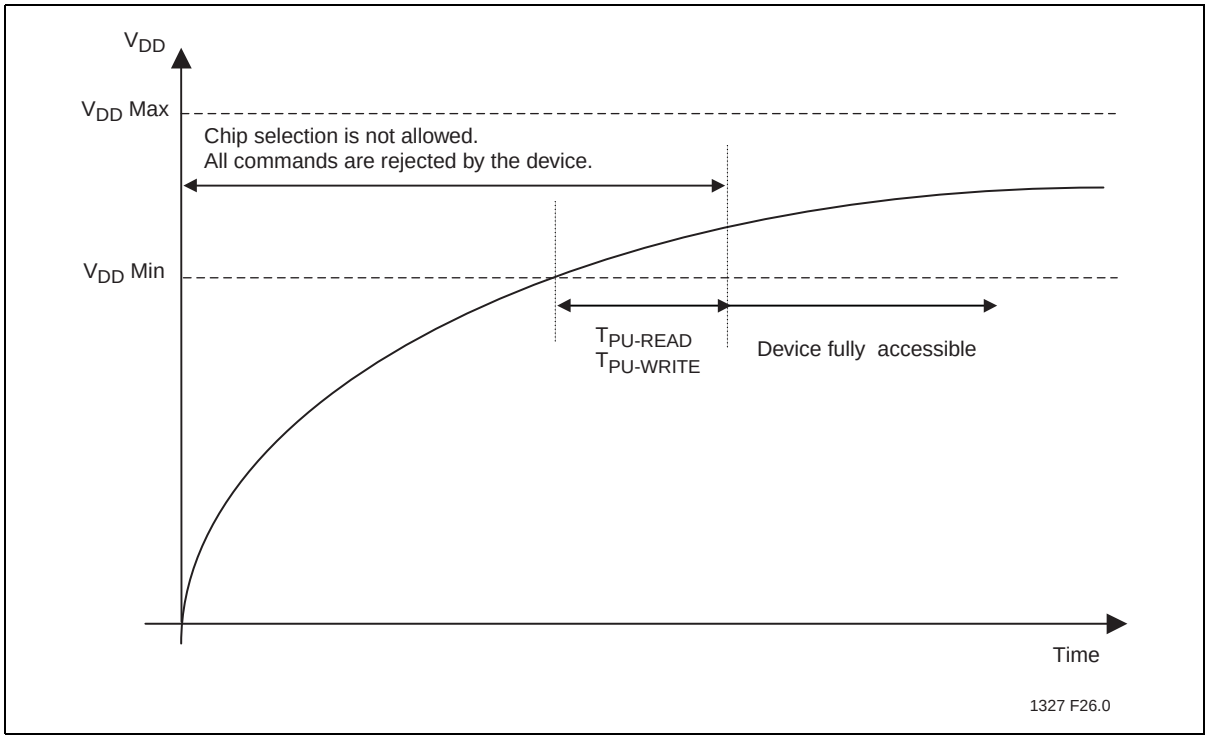

Figure 25: Power-up Timing Diagram

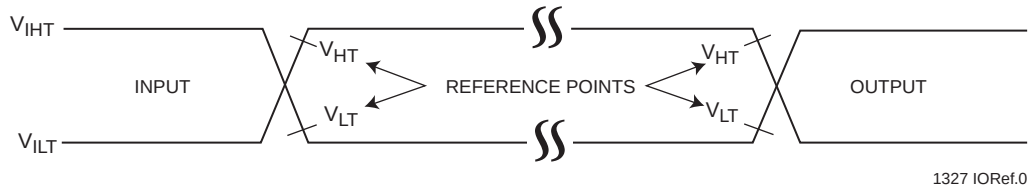

AC test inputs are driven at V_{IHT} ($0.9V_{DD}$) for a logic “1” and V_{ILT} ($0.1V_{DD}$) for a logic “0”. Measurement reference points for inputs and outputs are V_{HT} ($0.6V_{DD}$) and V_{LT} ($0.4V_{DD}$). Input rise and fall times (10% ↔ 90%) are <5 ns.

Note: V_{HT} - V_{HIGH} Test
V_{LT} - V_{LOW} Test
V_{IHT} - V_{INPUT} HIGH Test

Figure 26: AC Input/Output Reference Waveforms

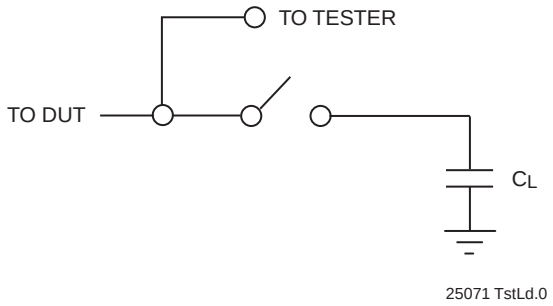

Figure 27: A Test Load Example

Product Ordering Information

SST 25 VF 032B - 80 - 4I - S2AF
XX XX XXXX - XX - XX - XXXX

Environmental Attribute
F[1] = non-Pb / non-Sn contact (lead) finish: Nickel plating with Gold top (outer) layer
E = non-Pb

Package Modifier
A = 8 leads or contacts

Package Type
S2 = SOIC 200 mil body width
Q = WSON (5 x 6 mm)

Temperature Range
I = Industrial = -40°C to +85°C

Minimum Endurance
4 = 10,000 cycles[2]

Operating Frequency
66 = 66 MHz
80 = 80 MHz

Device Density
032 = 32 Mbit

Voltage
V = 2.7-3.6V

Product Series
25 = Serial Peripheral Interface flash memory

1. Environmental suffix “F” denotes non-Pb/non-SN solder; “E” denotes non-Pb solder. SST non-Pb/non-Sn solder devices are “RoHS Compliant”.
2. Meets 100K Minimum Endurance cycles.

Valid combinations for SST25VF032B

SST25VF032B-66-4I-S2AF
SST25VF032B-80-4I-S2AF
SST25VF032B-80-4I-QAE

Note: Valid combinations are those products in mass production or will be in mass production. Consult your SST sales representative to confirm availability of valid combinations and to determine availability of new combinations.

Packaging Diagrams

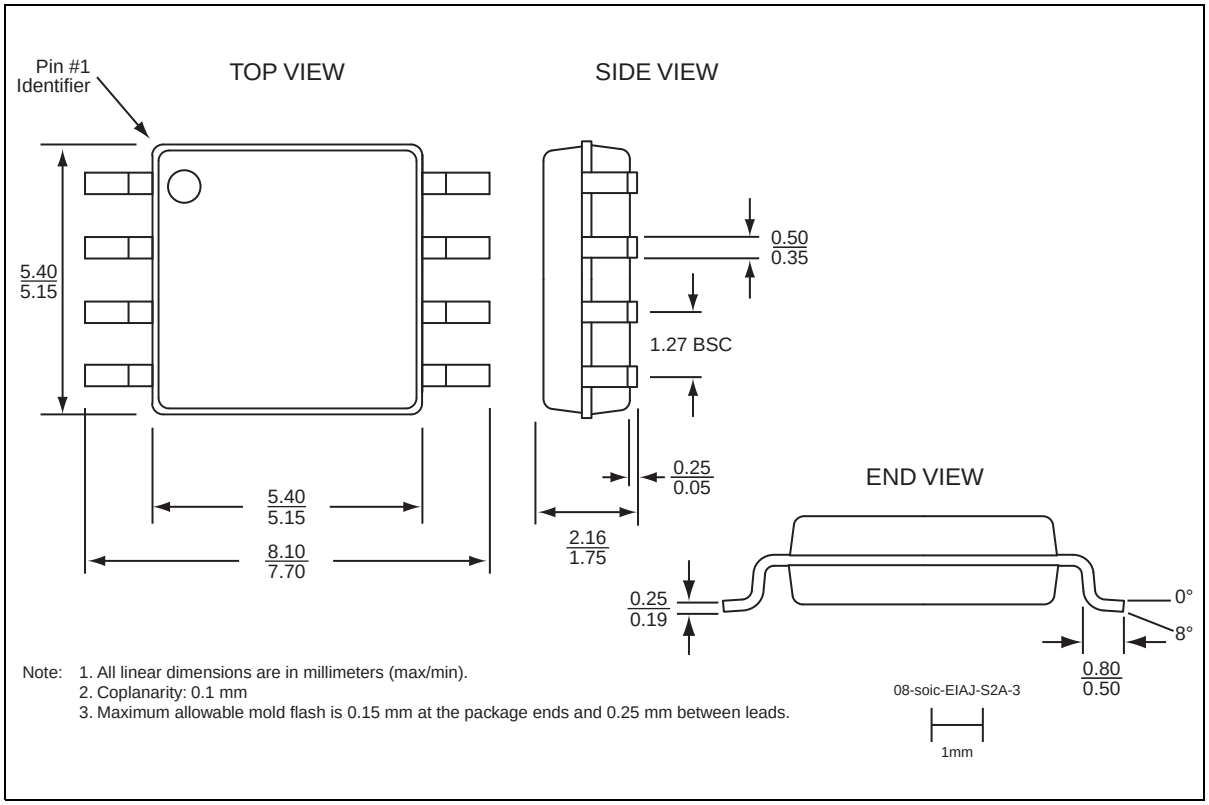

Figure 28: 8-lead Small-outline Integrated Circuit (SOIC) 200 mil body width (5.2mm x 8mm) SST Package Code: S2A

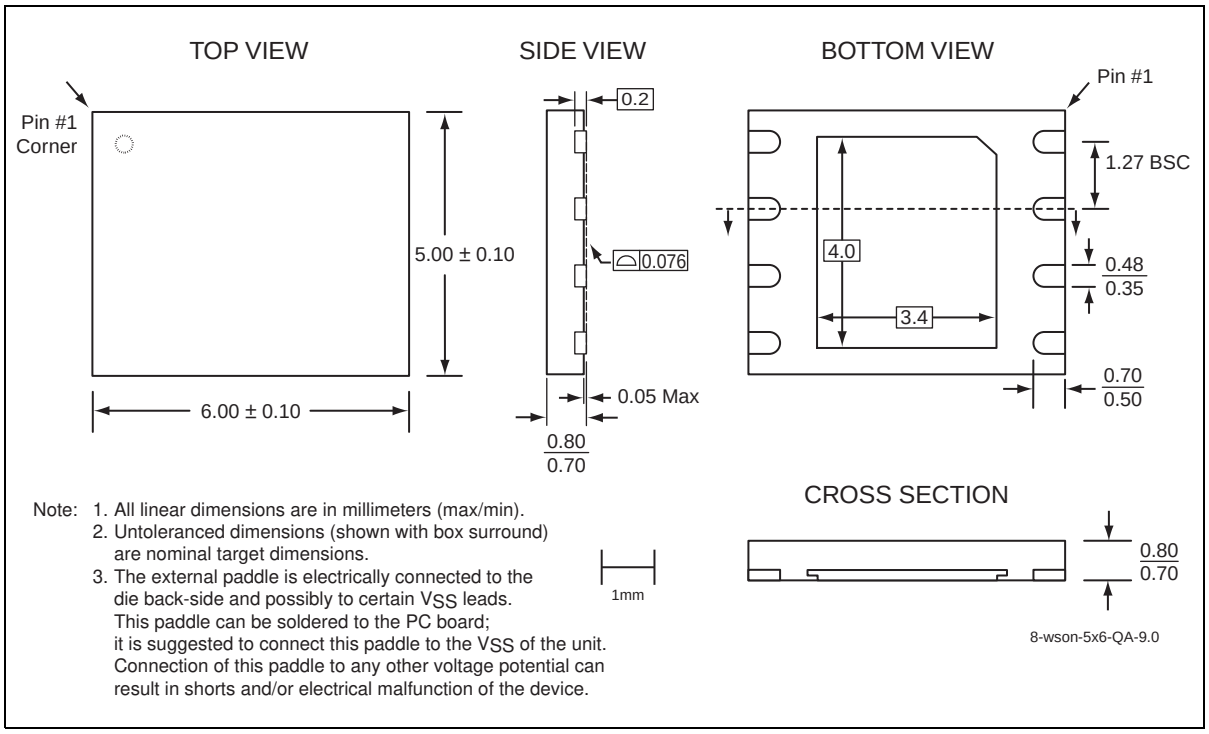

Figure 29: 8-Contact Very-very-thin, Small-outline, No-lead (WSON) SST Package Code: QA

Table 15: Revision History

Revision	Description	Date
00	• Initial release of data sheet	Oct 2006
01	• Changed clock frequency from 50 MHz to 66 MHz globally • Revised Table 13 AC Operating Characteristics • Revised Product Ordering Information and Valid Combinations on page 29 • Revised Figure 10 and Figure 11 • Changed IDDR2 from Max 15 mA to Max 20 mA in Table 10 • Changed TDH from Min 5 ns to Min 4 ns (66MHz) in Table 13	Mar 2008
02	• Removed SC package • Removed Commercial Temperature.	Jul 2008
03	• Added new valid combination with 80 MHz Clock Frequency • Added QA package • Edited Features, page 1 • Edited Product Description, page 1 • Edited Table 5 on page 9 • Edited Figure 6 on page 9 • Edited Table 10 on page 22 • Edited Table 13 on page 24	May 2009
04	• Updated “Auto Address Increment (AAI) Word-Program”, “End-of-Write Detection”, and “Hardware End-of-Write Detection” on page 12. • Revised Figures 10 and 11 on page 14. • Updated document to new format.	Feb 2011
A	• Updated Endurance information on page 23 and page 29 • Released document under letter revision system • Updated Spec number from S71327 to DS25071 • Added heading “Power-Up Specifications” on page 27	Dec 2011
B	• EOL of all SST25VF032B devices. • Document marked obsolete.	Apr 2015

ISBN:978-1-63277-311-1

© 2015 Microchip Technology Inc.

SST, Silicon Storage Technology, the SST logo, SuperFlash, and MTP are registered trademarks of Microchip Technology, Inc. MPF, SQI, Serial Quad I/O, and Z-Scale are trademarks of Microchip Technology, Inc. All other trademarks and registered trademarks mentioned herein are the property of their respective owners.

Specifications are subject to change without notice. Refer to www.microchip.com for the most recent documentation. For the most current package drawings, please see the Packaging Specification located at http://www.microchip.com/packaging.

Memory sizes denote raw storage capacity; actual usable capacity may be less.

Microchip makes no warranty for the use of its products other than those expressly contained in the Standard Terms and Conditions of Sale.

For sales office locations and information, please see www.microchip.com.

www.microchip.com