AT25010B/AT25020B/ AT25040B

SPI Automotive Temperature Serial EEPROM 1 Kbit (128 x 8), 2 Kbits (256 x 8) and 4 Kbits (512 x 8)

Features

- Serial Peripheral Interface (SPI) Compatible
- Supports SPI Modes 0 (0,0) and 3 (1,1):
  - Data sheet describes mode 0 operation
- Low-Voltage and Medium-Voltage Operation:
  - Grade 1, V_{CC} = 2.5V to 5.5V
  - Grade 3, V_{CC} = 1.7V to 5.5V
- Extended Temperature Range (Grade 1 and Grade 3 as defined in AEC-Q100):
  - Grade 1 Temperature Range: -40°C to +125°C
  - Grade 3 Temperature Range: -40°C to +85°C
- 5 MHz Clock Rate (5V)
- 8-Byte Page Mode
- Block Write Protection:
  - Protect 1/4, 1/2 or entire array
- Write-Protect ($\overline{WP}$) Pin and Write Disable Instructions for Both Hardware and Software Data Protection
- Self-Timed Write Cycle within 5 ms Maximum
- ESD Protection > 4,000V
- Automotive AEC-Q100 Qualified
- High Reliability:
  - Endurance: 1,000,000 write cycles
  - Data retention: 100 years
- Green (Lead-free/Halide-free/RoHS Compliant) Package Options

Packages

- 8-Lead SOIC, 8-Lead TSSOP and 8-Pad UDFN

© 2020 Microchip Technology Inc.

Table of Contents

Features 1

Packages 1

1. Package Types (not to scale) 4

2. Pin Description 5
   - 2.1. Chip Select ($\overline{CS}$) 5
   - 2.2. Serial Data Output (SO) 5
   - 2.3. Write-Protect ($\overline{WP}$) 5
   - 2.4. Ground (GND) 5
   - 2.5. Serial Data Input (SI) 5
   - 2.6. Serial Data Clock (SCK) 6
   - 2.7. Suspend Serial Input ($\overline{HOLD}$) 6
   - 2.8. Device Power Supply (V_{CC}) 6

3. Description 7
   - 3.1. SPI Bus Master Connections to Serial EEPROMs 7
   - 3.2. Block Diagram 8

4. Electrical Characteristics 9
   - 4.1. Absolute Maximum Ratings 9
   - 4.2. DC and AC Operating Range 9
   - 4.3. DC Characteristics 9
   - 4.4. AC Characteristics 10
   - 4.5. SPI Synchronous Data Timing 11
   - 4.6. Electrical Specifications 11

5. Device Operation 13
   - 5.1. Interfacing the AT25010B/AT25020B/AT25040B on the SPI Bus 13
   - 5.2. Device Opcodes 14
   - 5.3. Hold Function 14
   - 5.4. Write Protection 15

6. Device Commands and Addressing 16
   - 6.1. STATUS Register Bit Definition and Function 16
   - 6.2. Read STATUS Register (`RDSR`) 17
   - 6.3. Write Enable (`WREN`) and Write Disable (`WRDI`) 17
   - 6.4. Write STATUS Register (`WRSR`) 18

7. Read Sequence 20

8. Write Sequence 21
   - 8.1. Byte Write 21
   - 8.2. Page Write 21
   - 8.3. Polling Routine 22

9. Packaging Information 23

9.1. Package Marking Information....23

10. Revision History.... 32

The Microchip Website....33

Product Change Notification Service....33

Customer Support.... 33

Product Identification System....34

Microchip Devices Code Protection Feature....34

Legal Notice.... 35

Trademarks.... 35

Quality Management System.... 36

Worldwide Sales and Service....37

1. Package Types (not to scale)

8-Lead SOIC/TSSOP
(Top View)

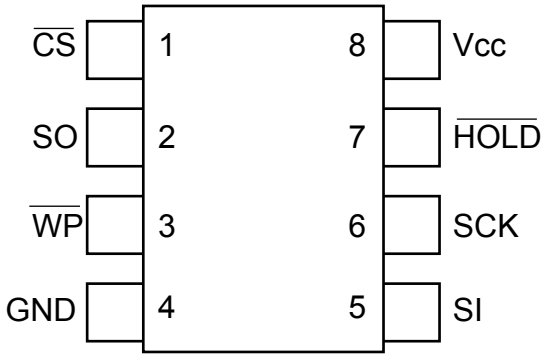

8-Pad UDFN
(Top View)

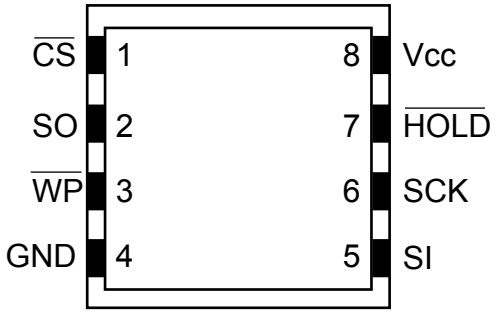

2. Pin Description

The descriptions of the pins are listed in Table 2-1.

Table 2-1. Pin Function Table

Name	8-Lead SOIC	8-Lead TSSOP	8-Pad UDFN(1)	Function
$\overline{CS}$	1	1	1	Chip Select
SO	2	2	2	Serial Data Output
$\overline{WP}$(2)	3	3	3	Write-Protect
GND	4	4	4	Ground
SI	5	5	5	Serial Data Input
SCK	6	6	6	Serial Data Clock
$\overline{HOLD}$(2)	7	7	7	Suspends Serial Input
V_{CC}	8	8	8	Device Power Supply

Note:

1. The exposed pad on this package can be connected to GND or left floating.
2. The Write-Protect ($\overline{WP}$) and Hold ($\overline{HOLD}$) pins should be driven high or low as appropriate.

2.1 Chip Select ($\overline{CS}$)

The AT25010B/AT25020B/AT25040B is selected when the Chip Select ($\overline{CS}$) pin is low. When the device is not selected, data will not be accepted via the Serial Data Input (SI) pin, and the Serial Output (SO) pin will remain in a high-impedance state.

To ensure robust operation, the $\overline{CS}$ pin should follow V_{CC} upon power-up. It is therefore recommended to connect $\overline{CS}$ to V_{CC} using a pull-up resistor (less than or equal to 10 kΩ). After power-up, a low level on $\overline{CS}$ is required prior to any sequence being initiated.

2.2 Serial Data Output (SO)

The Serial Data Output (SO) pin is used to transfer data out of the AT25010B/AT25020B/AT25040B. During a read sequence, data is shifted out on this pin after the falling edge of the Serial Data Clock (SCK).

2.3 Write-Protect ($\overline{WP}$)

The Write-Protect ($\overline{WP}$) pin will allow normal read/write operations when held high. When the $\overline{WP}$ pin is brought low, all write operations are inhibited. $\overline{WP}$ going low while $\overline{CS}$ is still low will interrupt a write operation. If the internal write cycle has already been initiated, $\overline{WP}$ going low will have no effect on any write operation.

2.4 Ground (GND)

The ground reference for the Device Power Supply (V_{CC}). The Ground (GND) pin should be connected to the system ground.

2.5 Serial Data Input (SI)

The Serial Data Input (SI) pin is used to transfer data into the device. It receives instructions, addresses and data. Data is latched on the rising edge of the Serial Data Clock (SCK).

2.6 Serial Data Clock (SCK)

The Serial Data Clock (SCK) pin is used to synchronize the communication between a master and the AT25010B/AT25020B/AT25040B. Instructions, addresses or data present on the Serial Data Input (SI) pin is latched in on the rising edge of SCK, while output on the Serial Data Output (SO) pin is clocked out on the falling edge of SCK.

2.7 Suspend Serial Input ($\overline{HOLD}$)

The Suspend Serial Input ($\overline{HOLD}$) pin is used in conjunction with the Chip Select ($\overline{CS}$) pin to pause the AT25010B/AT25020B/AT25040B. When the device is selected and a serial sequence is underway, $\overline{HOLD}$ can be used to pause the serial communication with the master device without resetting the serial sequence. To pause, the $\overline{HOLD}$ pin must be brought low while the Serial Data Clock (SCK) pin is low. To resume serial communication, the $\overline{HOLD}$ pin is brought high while the SCK pin is low (SCK may still toggle during $\overline{HOLD}$). Inputs to the Serial Data Input (SI) pin will be ignored while the Serial Data Output (SO) pin will be in the high-impedance state.

2.8 Device Power Supply (V_{CC})

The Device Power Supply (V_{CC}) pin is used to supply the source voltage to the device. Operations at invalid V_{CC} voltages may produce spurious results and should not be attempted.

3. Description

The AT25010B/AT25020B/AT25040B provides 1,024/2,048/4,096 bits of Serial Electrically Erasable and Programmable Read-Only Memory (EEPROM) organized as 128/256/512 words of 8 bits each. The device is optimized for use in many industrial and commercial applications where low-power and low-voltage operation are essential. The device is available in space-saving 8-lead SOIC, 8-lead TSSOP and 8-pad UDFN packages. All packages operate from 1.7V to 5.5V.

3.1 SPI Bus Master Connections to Serial EEPROMs

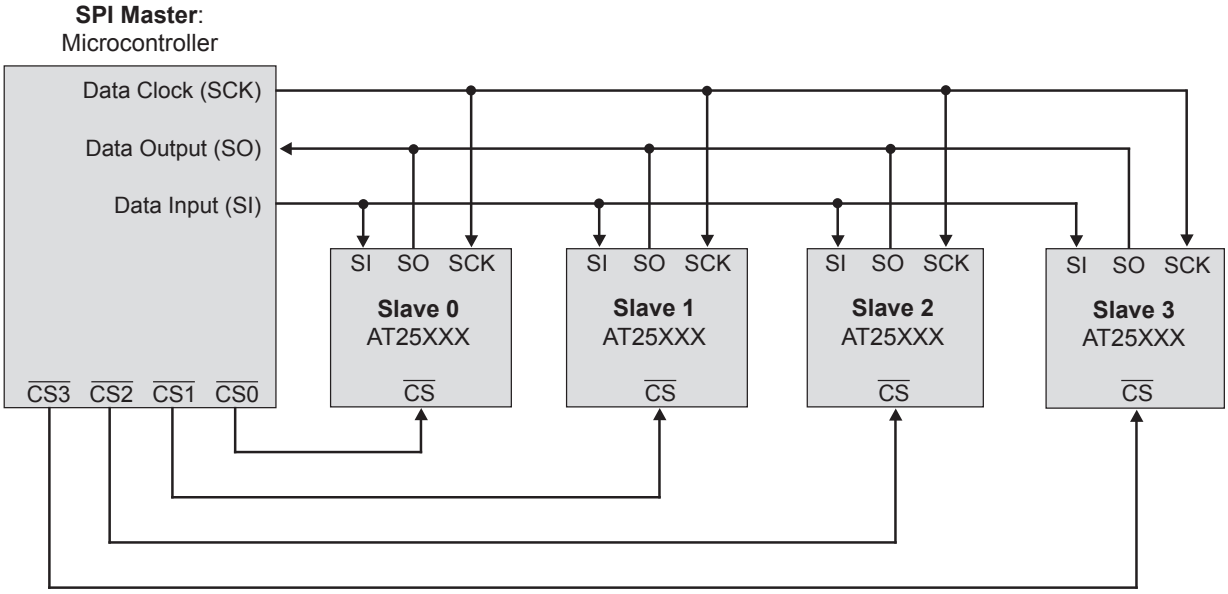

3.2 Block Diagram

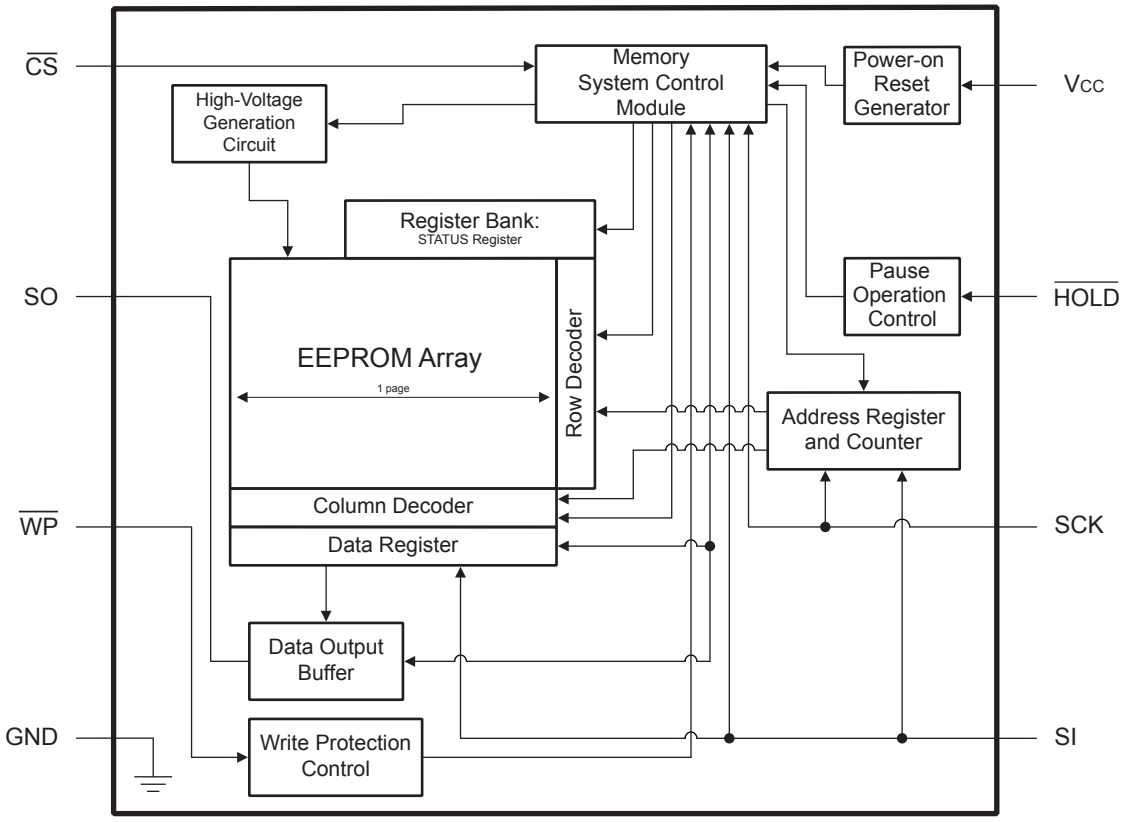

4. Electrical Characteristics

4.1 Absolute Maximum Ratings

Operating temperature	-40°C to +125°C
Storage temperature	-65°C to +150°C
Voltage on any pin with respect to ground	-1.0V to +7.0V
V_{CC}	6.25V
DC output current	5.0 mA
ESD protection	> 4 kV

Note: Stresses above those listed under “Absolute Maximum Ratings” may cause permanent damage to the device. This is a stress rating only and functional operation of the device at these or any other conditions above those indicated in the operation listings of this specification is not implied. Exposure to absolute maximum rating conditions for extended periods may affect device reliability.

4.2 DC and AC Operating Range

Table 4-1. DC and AC Operating Range

AT25010B/AT25020B/AT25040B	Automotive Grade 1	Automotive Grade 3
Operating Temperature (Case)	-40°C to +125°C	-40°C to +85°C
V_{CC} Power Supply	2.5V to 5.5V	1.7V to 5.5V

4.3 DC Characteristics

Table 4-2. DC Characteristics(1)

Parameter	Symbol	Minimum	Typical	Maximum	Units	Conditions
Supply Voltage	V_{CC1}	2.5	—	5.5	V	Grade 1
Supply Voltage	V_{CC2}	1.7	—	5.5	V	Grade 3
Supply Current	I_{CC1}	—	—	6.0	mA	V_{CC} = 5.0V at 5 MHz, SO = Open, Read
Supply Current	I_{CC2}	—	—	3.0	mA	V_{CC} = 5.0V at 1 MHz
Supply Current	I_{CC3}	—	—	6.0	mA	V_{CC} = 5.0V at 5 MHz, SO = Open, Read, Write
Standby Current	I_{SB1}	—	0.1	2.0	µA	V_{CC} = 1.7V, $\overline{CS}$ = V_{CC}
Standby Current	I_{SB2}	—	0.2	3.0	µA	V_{CC} = 2.5V, $\overline{CS}$ = V_{CC}
Standby Current	I_{SB3}	—	2.0	5.0	µA	V_{CC} = 5.0V, $\overline{CS}$ = V_{CC}
Input Leakage	I_{IL}	-3.0	—	3.0	µA	V_{IN} = 0V to V_{CC}
Output Leakage	I_{OL}	-3.0	—	3.0	µA	V_{IN} = 0V to V_{CC}
Input Low-Voltage	V_{IL}(2)	-0.6	—	V_{CC} x 0.3	V	

.....continued

Parameter	Symbol	Minimum	Typical	Maximum	Units	Conditions	
Input High-Voltage	V_{IH}[2]	V_{CC} x 0.7	—	V_{CC} + 0.5	V		
Output Low-Voltage	V_{OL1}	—	—	0.4	V	2.5V ≤ V_{CC} ≤ 5.5V	I_{OL} = 3.0 mA
Output High-Voltage	V_{OH1}	V_{CC} - 0.8	—	—	V	2.5V ≤ V_{CC} ≤ 5.5V	I_{OH} = -1.6 mA
Output Low-Voltage	V_{OL2}	—	—	0.2	V	1.7V ≤ V_{CC} ≤ 5.5V	I_{OL} = 0.15 mA
Output High-Voltage	V_{OH2}	V_{CC} - 0.2	—	—	V	1.7V ≤ V_{CC} ≤5.5V	I_{OH} = -100 µA

Note:

1. Applicable over recommended operating range from: T_{A1} = -40°C to +125°C, V_{CC1} = 2.5V to 5.5V; T_{A2} = -40°C to 85°C, V_{CC2} = 1.7V to 5.5V (unless otherwise noted).
2. V_{IL} min and V_{IH} max are for reference only and are not tested.

4.4 AC Characteristics

Table 4-3. AC Characteristics[1]

Parameter	Symbol	Minimum	Maximum	Units	Conditions
SCK Clock Frequency	f_{SCK}	0	5	MHz	
Input Rise Time	t_{RI}	—	2000	ns	
Input Fall Time	t_{FI}	—	2000	ns	
SCK High Time	t_{WH}	40	—	ns	
SCK Low Time	t_{WL}	40	—	ns	
$\overline{CS}$ High Time	t_{CS}	80	—	ns	
$\overline{CS}$ Setup Time	t_{CSS}	80	—	ns	
$\overline{CS}$ Hold Time	t_{CSH}	80	—	ns	
Data In Setup Time	t_{SU}	5	—	ns	
Data In Hold Time	t_H	20	—	ns	
$\overline{HOLD}$ Setup Time	t_{HD}	40	—	ns	
$\overline{HOLD}$ Hold Time	t_{CD}	40	—	ns	
Output Valid	t_V	0	40	ns	
Output Hold Time	t_{HO}	0	—	ns	
$\overline{HOLD}$ to Output Low-Z	t_{LZ}	0	40	ns	
$\overline{HOLD}$ to Output High-Z	t_{HZ}	—	80	ns	
Output Disable Time	t_{DIS}	—	80	ns	
Write Cycle Time	t_{WC}	—	5	ms	

Note:

1. Applicable over recommended operating ranges from T_{A1} = -40°C to +125°C, V_{CC1} = 2.5V to 5.5V and T_{A2} = -40°C to +85°C, V_{CC2} = 1.7V to 5.5V, C_L = 1 TTL Gate and 100 pF (unless otherwise noted).

4.5 SPI Synchronous Data Timing

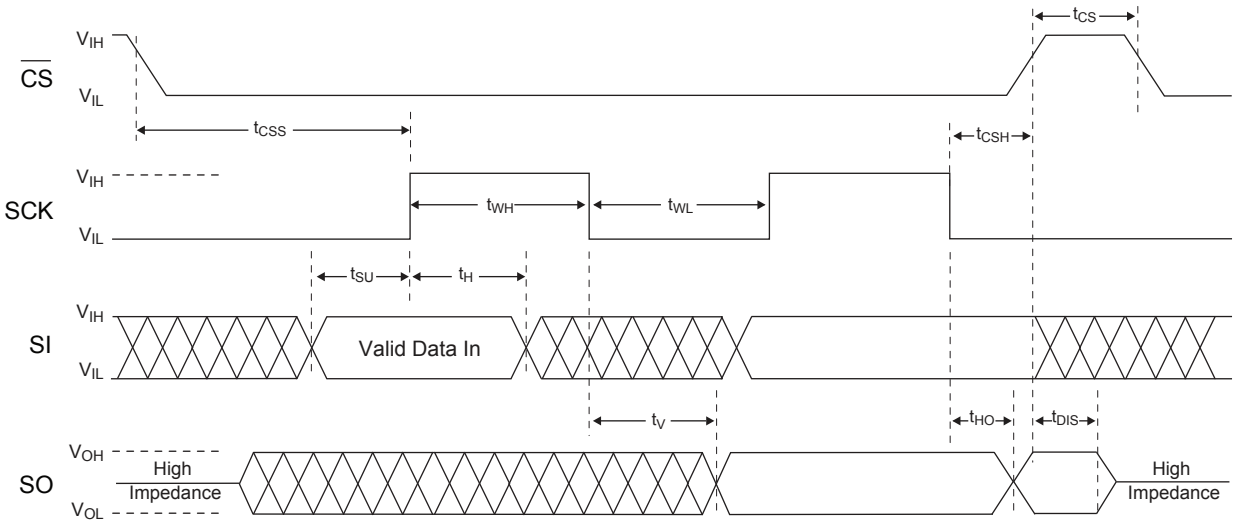

4.6 Electrical Specifications

4.6.1 Power-Up Requirements and Reset Behavior

During a power-up sequence, the V_{CC} supplied to the AT25010B/AT25020B/AT25040B should monotonically rise from GND to the minimum V_{CC} level, as specified in Table 4-1, with a slew rate no faster than 0.1 V/µs.

4.6.1.1 Device Reset

To prevent inadvertent write operations or any other spurious events from occurring during a power-up sequence, the AT25010B/AT25020B/AT25040B includes a Power-on Reset (POR) circuit. Upon power-up, the device will not respond to any instructions until the V_{CC} level crosses the internal voltage threshold (V_{POR}) that brings the device out of Reset and into Standby mode.

The system designer must ensure the instructions are not sent to the device until the V_{CC} supply has reached a stable value greater than or equal to the minimum V_{CC} level. Additionally, once the V_{CC} is greater than or equal to the minimum V_{CC} level, the bus master must wait at least t_{PUP} before sending the first instruction to the device. See Table 4-4 for the values associated with these power-up parameters.

Table 4-4. Power-Up Conditions[(1)]

Symbol	Parameter	Min.	Max.	Units
t_{PUP}	Time required after V_{CC} is stable before the device can accept instructions	100	—	µs
V_{POR}	Power-on Reset Threshold Voltage	—	1.5	V
t_{POFF}	Minimum time at V_{CC} = 0V between power cycles	500	—	ms

Note:

1. These parameters are characterized but they are not 100% tested in production.

If an event occurs in the system where the V_{CC} level supplied to the AT25010B/AT25020B/AT25040B drops below the maximum V_{POR} level specified, it is recommended that a full-power cycle sequence be performed by first driving the V_{CC} pin to GND in less than 1 ms, waiting at least the minimum t_{POFF} time and then performing a new power-up sequence in compliance with the requirements defined in this section.

4.6.2 Pin Capacitance

Table 4-5. Pin Capacitance[1,2]

Symbol	Test Condition	Max.	Units	Conditions
C_{OUT}	Output Capacitance (SO)	8	pF	V_{OUT} = 0V
C_{IN}	Input Capacitance ($\overline{CS}$, SCK, SI, $\overline{WP}$, $\overline{HOLD}$)	6	pF	V_{IN} = 0V

Note:

1. This parameter is characterized but is not 100% tested in production.
2. Applicable over recommended operating range from: T_A = 25°C, f_{SCK} = 1.0 MHz, V_{CC} = 5.0V (unless otherwise noted).

4.6.3 EEPROM Cell Performance Characteristics

Table 4-6. EEPROM Cell Performance Characteristics

Operation	Test Condition	Min.	Max.	Units
Write Endurance[1]	T_A = 25°C, V_{CC} = 5.0V, Page Write mode	1,000,000	—	Write Cycles
Data Retention[1]	T_A = 55°C	100	—	Years

Note:

1. Performance is determined through characterization and the qualification process.

4.6.4 Software Reset

The SPI interface of the AT25010B/AT25020B/AT25040B can be reset by toggling the $\overline{CS}$ input. If the $\overline{CS}$ line is already in the Active state, it must complete a transition from the Inactive state ($\geq V_{IH}$) to the Active state ($\leq V_{IL}$) and then back to the Inactive state ($\geq V_{IH}$) without sending clocks on the SCK line. Upon completion of this sequence, the device will be ready to receive a new opcode on the SI line.

4.6.5 Device Default State at Power-Up

The AT25010B/AT25020B/AT25040B default state upon power-up consists of:

- Standby Power mode
- A high-to-low-level transition on $\overline{CS}$ is required to enter Active state
- Write Enable Latch (WEL) bit in the STATUS register = 0
- $\overline{Ready}$/Busy bit in the STATUS register = 0, indicating the device is ready to accept a new command
- Device is not selected
- Not in Hold condition
- BP1 and BP0 bits in the STATUS register are unchanged from their previous state due to the fact that they are nonvolatile values

4.6.6 Device Default Condition

The AT25010B/AT25020B/AT25040B is shipped from Microchip to the customer with the EEPROM array set to an all FFh data pattern (logic '1' state). The Write-Protect Enable bit in the STATUS register is set to logic '0' and the Block Write-Protect bits in the STATUS register are set to logic '0'.

5. Device Operation

The AT25010B/AT25020B/AT25040B is controlled by a set of instructions that are sent from a host controller, commonly referred to as the SPI Master. The SPI Master communicates with the AT25010B/AT25020B/AT25040B via the SPI bus which is comprised of four signal lines: Chip Select ($\overline{CS}$), Serial Data Clock (SCK), Serial Data Input (SI) and Serial Data Output (SO).

The SPI protocol defines a total of four modes of operation (Mode 0, 1, 2 or 3) with each mode differing in respect to the SCK polarity and phase and how the polarity and phase control the flow of data on the SPI bus. The AT25010B/AT25020B/AT25040B supports the two most common modes, SPI Modes 0 and 3. With SPI Modes 0 and 3, data is always latched in on the rising edge of SCK and always output on the falling edge of SCK. The only difference between SPI Modes 0 and 3 is the polarity of the SCK signal when in the Inactive state (when the SPI Master is in Standby mode and not transferring any data). SPI Mode 0 is defined as a low SCK while $\overline{CS}$ is not asserted (at V_{CC}) and SPI Mode 3 has SCK high in the Inactive state. The SCK Idle state must match when the $\overline{CS}$ is deasserted both before and after the communication sequence in SPI Mode 0 and 3. The figures in this document depict Mode 0 with a solid line on SCK while $\overline{CS}$ is inactive and Mode 3 with a dotted line.

Figure 5-1. SPI Mode 0 and Mode 3

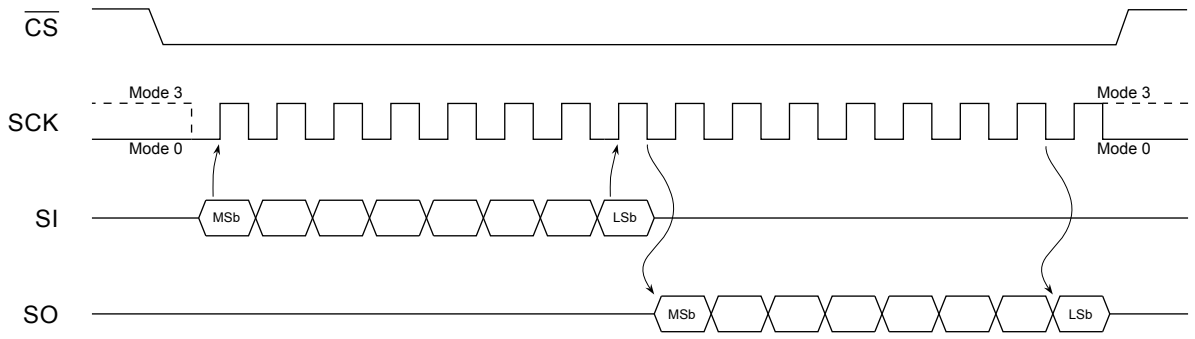

5.1 Interfacing the AT25010B/AT25020B/AT25040B on the SPI Bus

Communication to and from the AT25010B/AT25020B/AT25040B must be initiated by the SPI Master device, such as a microcontroller. The SPI Master device must generate the serial clock for the AT25010B/AT25020B/AT25040B on the Serial Data Clock (SCK) pin. The AT25010B/AT25020B/AT25040B always operates as a slave due to the fact that the SCK is always an input.

5.1.1 Selecting the Device

The AT25010B/AT25020B/AT25040B is selected when the Chip Select ($\overline{CS}$) pin is low. When the device is not selected, data will not be accepted via the Serial Data Input (SI) pin, and the Serial Data Output (SO) pin will remain in a high-impedance state.

5.1.2 Sending Data to the Device

The AT25010B/AT25020B/AT25040B uses the SI pin to receive information. All instructions, addresses and data input bytes are clocked into the device with the Most Significant bit (MSb) first. The SI pin samples on the first rising edge of the SCK line after the $\overline{CS}$ has been asserted.

5.1.3 Receiving Data from the Device

Data output from the device is transmitted on the SO pin, with the MSb output first. The SO data is latched on the first falling edge of SCK after the instruction has been clocked into the device, such as the Read from Memory Array (`READ`) and Read STATUS Register (`RDSR`) instructions. See Read Sequence for more details.

5.2 Device Opcodes

5.2.1 Serial Opcode

After the device is selected by driving $\overline{CS}$ low, the first byte will be received on the SI pin. This byte contains the opcode that defines the operation to be performed. Refer to Table 6-1 for a list of all opcodes that the AT25010B/AT25020B/AT25040B will respond to.

5.2.2 Invalid Opcode

If an invalid opcode is received, no data will be shifted into AT25010B/AT25020B/AT25040B and the SO pin will remain in a high-impedance state until the falling edge of $\overline{CS}$ is detected again. This will reinitialize the serial communication.

5.3 Hold Function

The Suspend Serial Input ($\overline{HOLD}$) pin is used to pause the serial communication with the device without having to stop or reset the clock sequence. The Hold mode, however, does not have an effect on the internal write cycle. Therefore, if a write cycle is in progress, asserting the $\overline{HOLD}$ pin will not pause the operation and the write cycle will continue to completion.

The Hold mode can only be entered while the $\overline{CS}$ pin is asserted. The Hold mode is activated by asserting the $\overline{HOLD}$ pin during the SCK low pulse. If the $\overline{HOLD}$ pin is asserted during the SCK high pulse, then the Hold mode will not be started until the beginning of the next SCK low pulse. The device will remain in the Hold mode as long as the $\overline{HOLD}$ pin and $\overline{CS}$ pin are asserted.

While in Hold mode, the SO pin will be in a high-impedance state. In addition, both the SI pin and the SCK pin will be ignored. The Write-Protect ($\overline{WP}$) pin, however, can still be asserted or deasserted while in the Hold mode.

To end the Hold mode and resume serial communication, the $\overline{HOLD}$ pin must be deasserted during the SCK low pulse. If the $\overline{HOLD}$ pin is deasserted during the SCK high pulse, then the Hold mode will not end until the beginning of the next SCK low pulse.

If the $\overline{CS}$ pin is deasserted while the $\overline{HOLD}$ pin is still asserted, then any operation that may have been started will be aborted and the device will reset the WEL bit in the STATUS register back to the logic '0' state.

Figure 5-2. Hold Mode

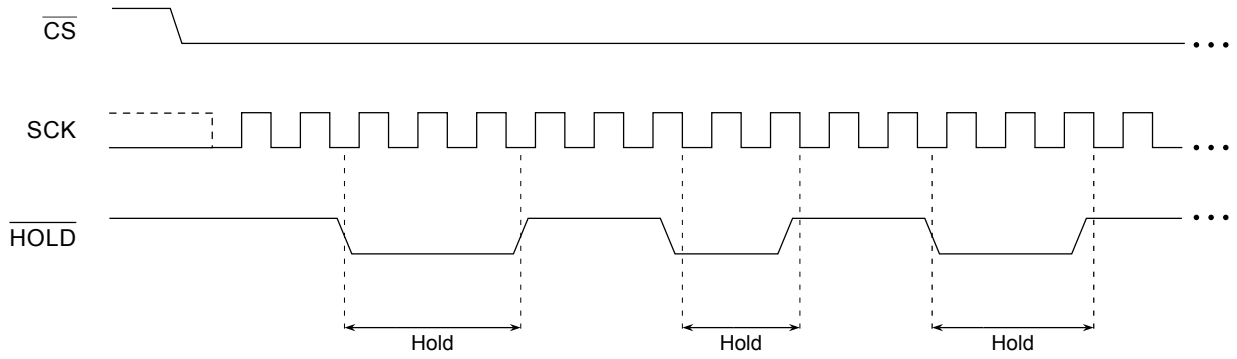

Figure 5-3. Hold Timing

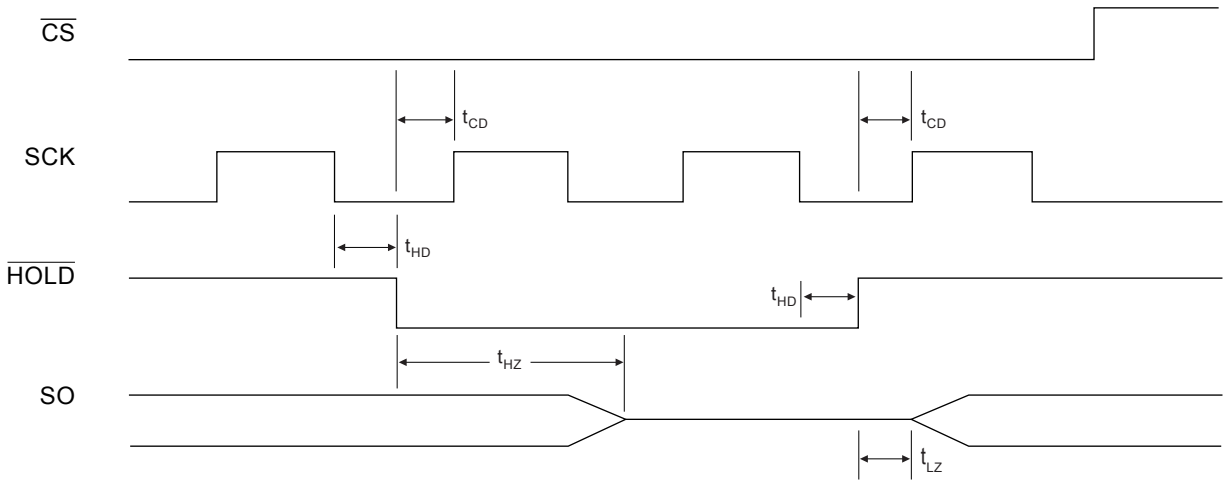

5.4 Write Protection

The Write-Protect ($\overline{WP}$) pin will allow normal read and write operations when held high. When the $\overline{WP}$ pin is brought low, all write operations are inhibited. The $\overline{WP}$ pin going low while $\overline{CS}$ is still low will interrupt a write operation. If the internal write cycle has already been initiated, $\overline{WP}$ going low will have no effect on any write operation.

6. Device Commands and Addressing

The AT25010B/AT25020B/AT25040B is designed to interface directly with the synchronous Serial Peripheral Interface (SPI). The AT25010B/AT25020B/AT25040B utilizes an 8-bit instruction register. The list of instructions and their operation codes are contained in Table 6-1. All instructions, addresses and data are transferred with the MSb first and start with a high-to-low $\overline{CS}$ transition.

Table 6-1. Instruction Set for the AT25010B/AT25020B/AT25040B

Instruction Name	Instruction Format	Operates On	Operation Description
WREN	0000 X110	STATUS Register	Set Write Enable Latch (WEL)
WRDI	0000 X100	STATUS Register	Reset Write Enable Latch (WEL)
RDSR	0000 X101	STATUS Register	Read STATUS Register
WRSR	0000 X001	STATUS Register	Write STATUS Register
READ	0000 A011	Memory Array	Read from Memory Array
WRITE	0000 A010	Memory Array	Write to Memory Array

Note:

1. "A" represents the MSb address bit (A_8) for the AT25040B and a "don't care" bit for the AT25020B and AT25010B.

6.1 STATUS Register Bit Definition and Function

The AT25010B/AT25020B/AT25040B includes an 8-bit STATUS register. The STATUS register bits modulate various features of the device as shown in Table 6-2 and Table 6-3. These bits can be changed by specific instructions that are detailed in the following sections.

Table 6-2. STATUS Register Format

Bit 7	Bit 6	Bit 5	Bit 4	Bit 3	Bit 2	Bit 1	Bit 0
X	X	X	X	BP1	BP0	WEL	$\overline{RDY}$/BSY

Table 6-3. STATUS Register Bit Definition

Bit	Name		Type	Description	
7:4	RFU	Reserved for Future Use	R	0	Reads as zeros when the device is not in a write cycle
				1	Reads as ones when the device is in a write cycle
3:2	BP1 BP0	Block Write Protection	R/W	00	No array write protection (Factory Default)
				01	Quarter array write protection (see Table 6-4)
				10	Half array write protection (see Table 6-4)
				11	Entire array write protection (see Table 6-4)
1	WEL	Write Enable Latch	R	0	Device is not write enabled (Power-up Default)
				1	Device is write enabled
0	$\overline{RDY}$/BSY	Ready/Busy Status	R	0	Device is ready for a new sequence
				1	Device is busy with an internal operation

6.2 Read STATUS Register (RDSR)

The Read STATUS Register (RDSR) instruction provides access to the STATUS register. The ready/busy and write enable status of the device can be determined by the RDSR instruction. Similarly, the Block Write-Protect (BP1, BP0) bits indicate the extent of memory array protection employed. The STATUS register is read by asserting the $\overline{CS}$ pin, followed by sending in a 05h opcode on the SI pin. Upon completion of the opcode, the device will return the 8-bit STATUS register value on the SO pin.

Figure 6-1. RDSR Waveform

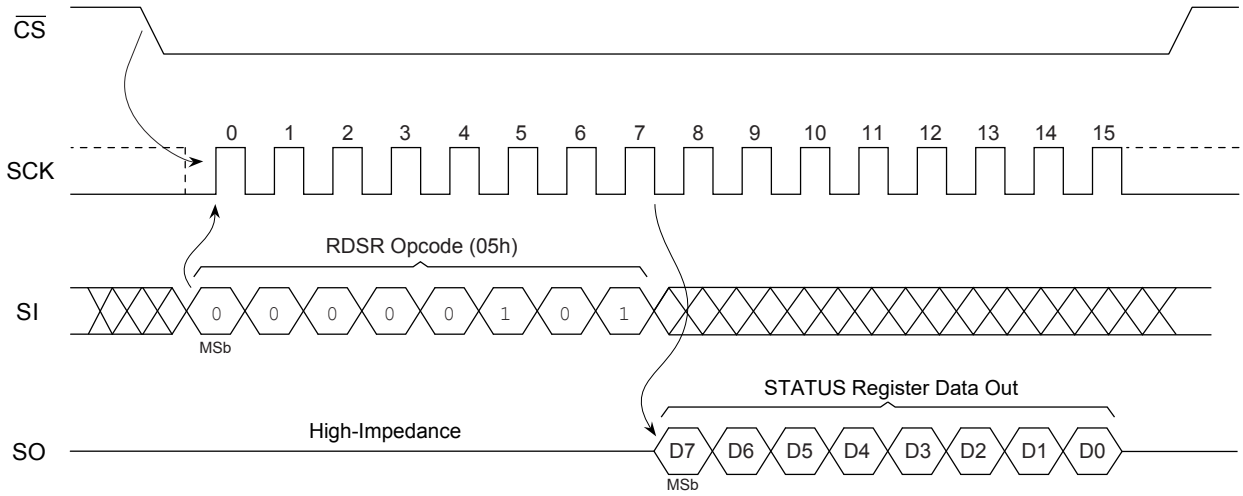

6.3 Write Enable (WREN) and Write Disable (WRDI)

Enabling and disabling writing to the STATUS register and EEPROM array is accomplished through the Write Enable (WREN) instruction and the Write Disable (WRDI) instruction. These functions change the status of the WEL bit in the STATUS register.

6.3.1 Write Enable Instruction (WREN)

The Write Enable Latch (WEL) bit of the STATUS register must be set to a logic '1' prior to each Write STATUS Register (WRSR) and Write to Memory Array (WRITE) instructions. This is accomplished by sending a WREN (06h) instruction to the AT25010B/AT25020B/AT25040B. First, the $\overline{CS}$ pin is driven low to select the device and then a WREN instruction is clocked in on the SI pin. Then the $\overline{CS}$ pin can be driven high and the WEL bit will be updated in the STATUS register to a logic '1'. The device will power-up in the Write Disable state (WEL = 0). The $\overline{WP}$ pin must be held high during a WREN instruction.

Figure 6-2. WREN Timing

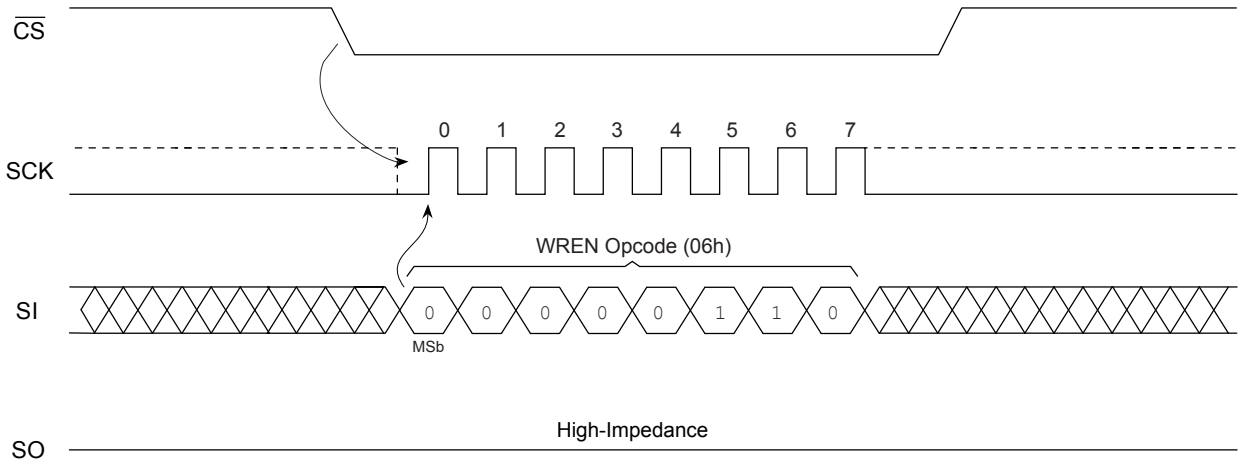

6.3.2 Write Disable Instruction (WRDI)

To protect the device against inadvertent writes, the Write Disable (WRDI) instruction (opcode 04h) disables all programming modes by setting the WEL bit to a logic '0'. The WRDI instruction is independent of the status of the $\overline{WP}$ pin.

Figure 6-3. WRDI Timing

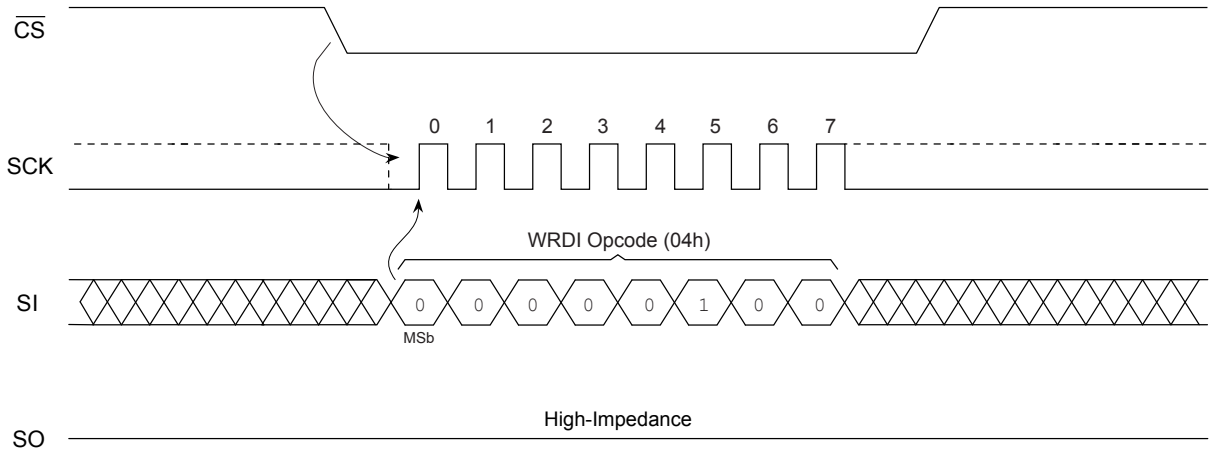

6.4 Write STATUS Register (WRSR)

The Write STATUS Register (WRSR) instruction enables the SPI Master to change selected bits of the STATUS register. Before a WRSR instruction can be initiated, a WREN instruction must be executed to set the WEL bit to logic '1'. Upon completion of a WREN instruction, a WRSR instruction can be executed.

Note: The WRSR instruction has no effect on bit 7, bit 6, bit 5, bit 4, bit 1 and bit 0 of the STATUS register. Only bit 3 and bit 2 can be changed via the WRSR instruction. These modifiable bits are the Block Protect (BP1, BP0) bits. These bits are nonvolatile bits that have the same properties and functions as regular EEPROM cells. Their values are retained while power is removed from the device.

The AT25010B/AT25020B/AT25040B will not respond to commands other than a RDSR after a WRSR instruction until the self-timed internal write cycle has completed. When the write cycle is completed, the WEL bit in the STATUS register is reset to logic '0'.

Figure 6-4. WRSR Waveform

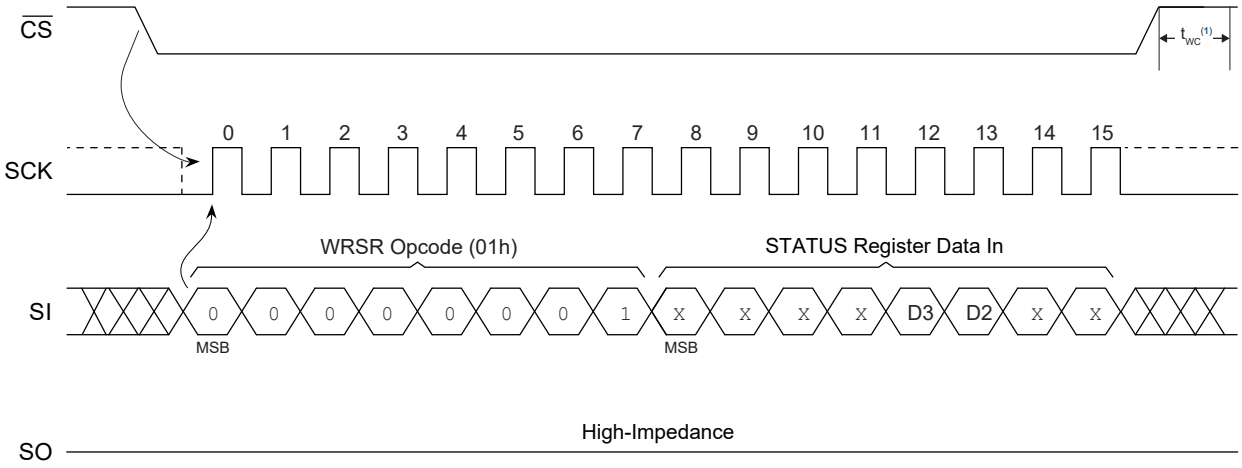

Note:

1. This instruction initiates a self-timed internal write cycle (t_{WC}) on the rising edge of $\overline{CS}$ after a valid sequence.

6.4.1 Block Write-Protect Function

The `WRSR` instruction allows the user to select one of four possible combinations as to how the memory array will be inhibited from writing through changing the Block Write-Protect bits (BP1, BP0). The four levels of array protection are:

- None of the memory array is protected.
- Upper quarter (¼) address range is write-protected meaning the highest order address bits are read-only.
- Upper half (½) address range is write-protected meaning the highest order address bits are read-only.
- All of the memory array is write-protected meaning all address bits are read-only.

The Block Write Protection levels and corresponding STATUS register control bits are shown in Table 6-4.

Table 6-4. Block Write-Protect Bits

Level	STATUS Register Bits		Write-Protected/Read-Only Address Range		
	BP1	BP0	AT25010B	AT25020B	AT25040B
0	0	0	None	None	None
1(1/4)	0	1	60h-7Fh	C0h-FFh	180h-1FFh
2(1/2)	1	0	40h-7Fh	80h-FFh	100h-1FFh
3(All)	1	1	00h-7Fh	00h-FFh	000h-1FFh

7. Read Sequence

Reading the AT25010B/AT25020B/AT25040B via the SO pin requires the following sequence. After the $\overline{CS}$ line is pulled low to select a device, the READ (03h) instruction (including A_8 for the AT25040B) is transmitted via the SI line followed by the 8-bit address to be read (A_7 - A_0). Refer to Table 7-1 for the address bits for AT25010B/AT25020B/AT25040B.

Table 7-1. AT25010B/AT25020B/AT25040B Address Bits

Address	AT25010B	AT25020B	AT25040B
A_N	A_6-A_0	A_7-A_0	A_8-A_0
Don't Care Bits	A_7	None	None

Upon completion of the 8-bit address, any data on the SI line will be ignored. The data (D_7-D_0) at the specified address is then shifted out onto the SO line. If only one byte is to be read, the $\overline{CS}$ line should be driven high after the data comes out. The read sequence can be continued since the byte address is automatically incremented and data will continue to be shifted out. When the highest-order address bit is reached, the address counter will rollover to the lowest-order address bit allowing the entire memory to be read in one continuous read cycle regardless of the starting address.

Figure 7-1. Read Waveform

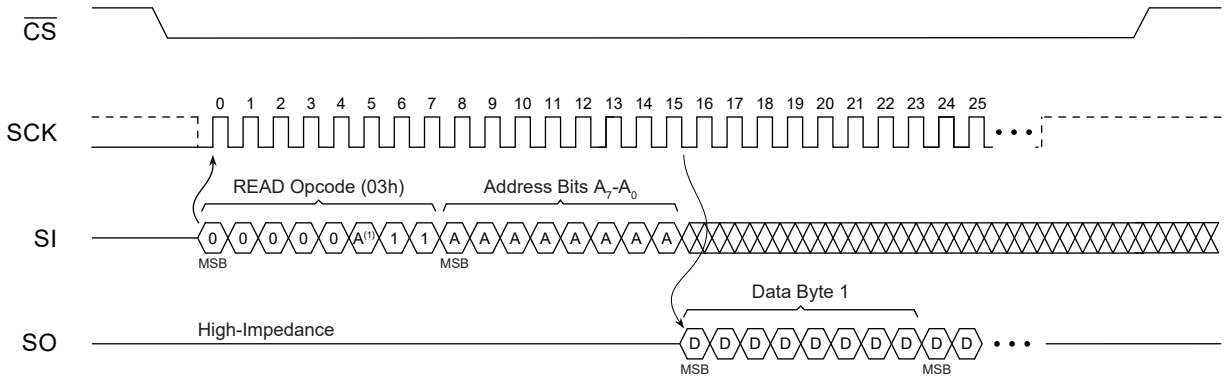

Note:

1. "A" represents the MSb address bit (A_8) for the AT25040B and a "don't care" bit for the AT25020B and AT25010B.

8. Write Sequence

In order to program the AT25010B/AT25020B/AT25040B, two separate instructions must be executed. First, the device *must be write enabled* via the Write Enable (WREN) instruction. Then, one of the two possible write sequences described in this section may be executed.

Note: If the $\overline{WP}$ pin is brought low or the device is not Write Enabled (WREN), the device will ignore the WRITE instruction and will return to the standby state when $\overline{CS}$ is brought high. A new $\overline{CS}$ assertion is required to re-initiate communication.

The address of the memory location(s) to be programmed must be outside the protected address field location selected by the block write protection level. During an internal write cycle, all commands will be ignored except the RDSR instruction. Refer to Table 8-1 for the address bits for AT25010B/AT25020B/AT25040B.

Table 8-1. AT25010B/AT25020B/AT25040B Address Bits

Address	AT25010B	AT25020B	AT25040B
A_N	A_6-A_0	A_7-A_0	A_8-A_0
Don't Care Bits	A_7	None	None

8.1 Byte Write

A byte write requires the following sequence and is depicted in Figure 8-1. After the $\overline{CS}$ line is pulled low to select the device, the WRITE (02h) instruction (including A_8 for the AT25040B) is transmitted via the SI line followed by the 8-bit address and the data (D7-D0) to be programmed. Programming will start after the $\overline{CS}$ pin is brought high. The low-to-high transition of the $\overline{CS}$ pin must occur during the SCK low time (Mode 0) and SCK high time (Mode 3) immediately after clocking in the D0 (LSB) data bit. The AT25010B/AT25020B/AT25040B is automatically returned to the Write Disable state (STATUS register bit WEL = 0) at the completion of a write cycle.

Figure 8-1. Byte Write

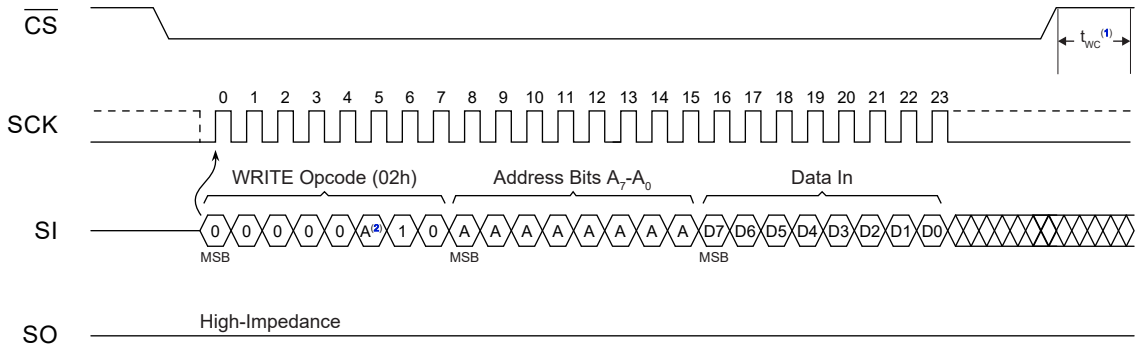

Note:

1. This instruction initiates a self-timed internal write cycle (t_{WC}) on the rising edge of $\overline{CS}$ after a valid sequence.
2. "A" represents the MSb address bit (A_8) for the AT25040B and a "don't care" bit for the AT25020B and AT25010B.

8.2 Page Write

A page write sequence allows up to 8 bytes to be written in the same write cycle, provided that all bytes are in the same row of the memory array. Partial page writes of less than 8 bytes are allowed. After each byte of data is received, the three lowest order address bits are internally incremented following the receipt of each data byte. The higher order address bits are not incremented and retain the memory array page location. If more bytes of data are transmitted than will fit to the end of that memory row, the address counter will rollover to the beginning of the same row. Nevertheless, creating a rollover event should be avoided as previously loaded data in the page could become

unintentionally altered. The AT25010B/AT25020B/AT25040B is automatically returned to the Write Disable state (WEL = 0) at the completion of a write cycle.

Figure 8-2. Page Write

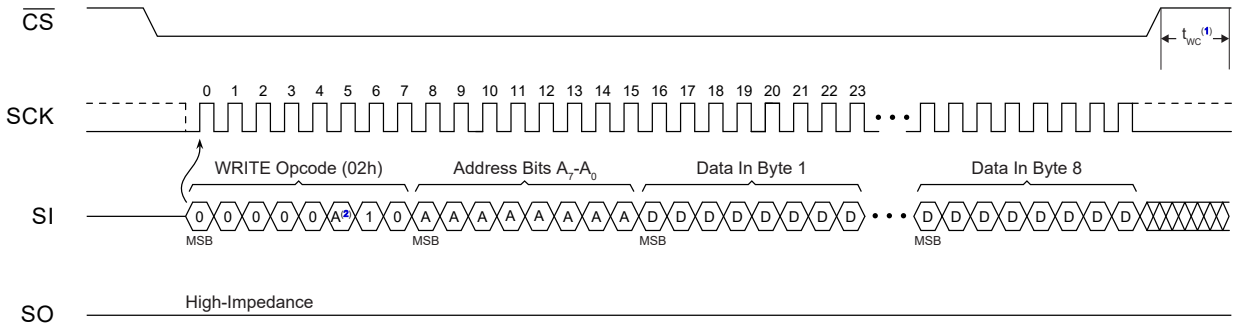

Note:

1. This instruction initiates a self-timed internal write cycle (t_{WC}) on the rising edge of $\overline{CS}$ after a valid sequence.
2. "A" represents the MSb address bit (A_8) for the AT25040B and a "don't care" bit for the AT25010B and AT25020B.

8.3 Polling Routine

A polling routine can be implemented to optimize time-sensitive applications that would not prefer to wait the fixed maximum write cycle time (t_{WC}). This method allows the application to know immediately when the write cycle has completed to start a subsequent operation.

Once the internally-timed write cycle has started, a polling routine can be initiated. This involves repeatedly sending a Read STATUS Register (RDSR) instruction to determine if the device has completed its self-timed internal write cycle. If the $\overline{RDY}$/BSY bit (bit 0 of STATUS register) = 1, the write cycle is still in progress. If bit 0 = 0, the write cycle has ended. If the $\overline{RDY}$/BSY bit = 1, repeated RDSR commands can be executed until the $\overline{RDY}$/BSY bit = 0, signaling that the device is ready to execute a new instruction. Only the Read STATUS Register (RDSR) instruction is enabled during the write cycle.

Figure 8-3. Polling Flowchart

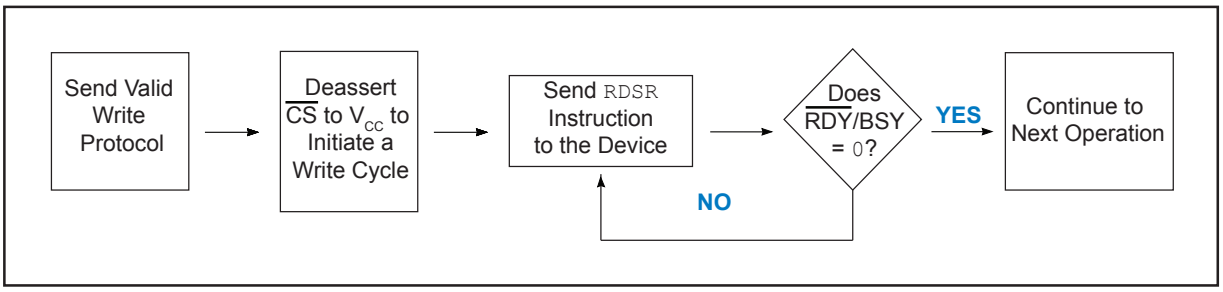

9. Packaging Information

9.1 Package Marking Information

AT25010B, AT25020B and AT25040B: Package Marking Information

8-lead SOIC	8-lead TSSOP	8-pad UDFN
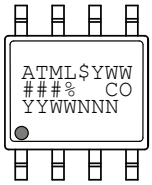		2.0 x 3.0 mm Body

Note 1: ● designates pin 1
Note 2: Package drawings are not to scale

Catalog Number Truncation	
AT25010B	Truncation Code ###: 51B
AT25020B	Truncation Code ###: 52B
AT25040B	Truncation Code ###: 54B

Date Codes					**Voltages**
YY = Year		Y = Year		WW = Work Week of Assembly	% = Minimum Voltage
16: 2016	20: 2020	6: 2016	0: 2020	02: Week 2	M: 1.7V min
17: 2017	21: 2021	7: 2017	1: 2021	04: Week 4	D: 2.5V min
18: 2018	22: 2022	8: 2018	2: 2022	...	
19: 2019	23: 2023	9: 2019	3: 2023	52: Week 52	

Country of Origin	**$ = Device Grade**	**Atmel Truncation**
CO = Country of Origin	P: Automotive Grade 1, 2.5V min. 9: Automotive Grade 3, 1.7V min.	AT: Atmel ATM: Atmel ATML: Atmel

Lot Number or Trace Code
NNN = Alphanumeric Trace Code (2 Characters for Small Packages)

8-Lead Plastic Small Outline (SN) - Narrow, 3.90 mm (.150 In.) Body [SOIC]

Note: For the most current package drawings, please see the Microchip Packaging Specification located at http://www.microchip.com/packaging

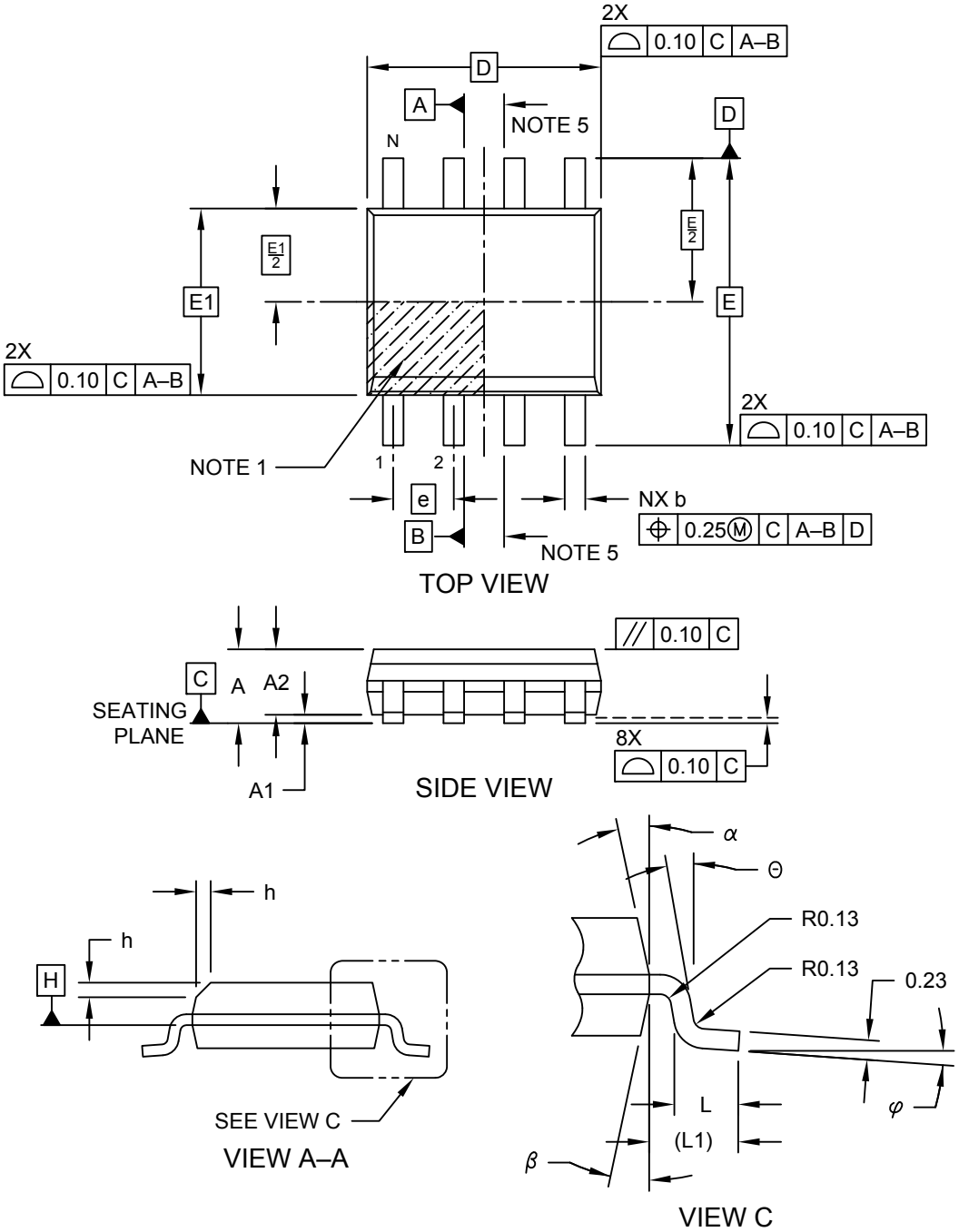

Microchip Technology Drawing No. C04-057-SN Rev F Sheet 1 of 2

8-Lead Plastic Small Outline (SN) - Narrow, 3.90 mm (.150 In.) Body [SOIC]

Note: For the most current package drawings, please see the Microchip Packaging Specification located at http://www.microchip.com/packaging

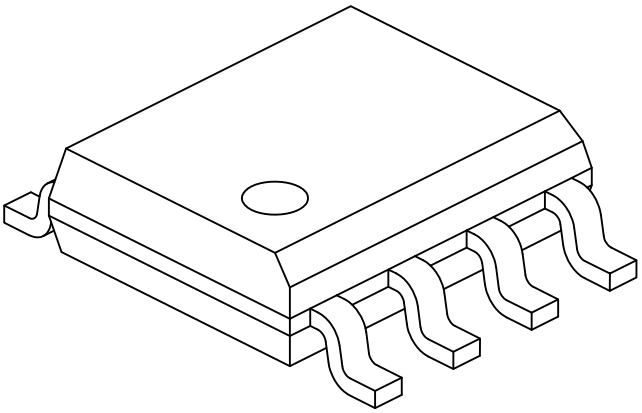

Units		MILLIMETERS		
Dimension Limits		MIN	NOM	MAX
Number of Pins	N	8		
Pitch	e	1.27 BSC		
Overall Height	A	-	-	1.75
Molded Package Thickness	A2	1.25	-	-
Standoff §	A1	0.10	-	0.25
Overall Width	E	6.00 BSC		
Molded Package Width	E1	3.90 BSC		
Overall Length	D	4.90 BSC		
Chamfer (Optional)	h	0.25	-	0.50
Foot Length	L	0.40	-	1.27
Footprint	L1	1.04 REF		
Foot Angle	φ	0°	-	8°
Lead Thickness	c	0.17	-	0.25
Lead Width	b	0.31	-	0.51
Mold Draft Angle Top	α	5°	-	15°
Mold Draft Angle Bottom	β	5°	-	15°

Notes:

1. Pin 1 visual index feature may vary, but must be located within the hatched area.
2. § Significant Characteristic
3. Dimensions D and E1 do not include mold flash or protrusions. Mold flash or protrusions shall not exceed 0.15mm per side.
4. Dimensioning and tolerancing per ASME Y14.5M
   BSC: Basic Dimension. Theoretically exact value shown without tolerances.
   REF: Reference Dimension, usually without tolerance, for information purposes only.
5. Datums A & B to be determined at Datum H.

Microchip Technology Drawing No. C04-057-SN Rev F Sheet 2 of 2

8-Lead Plastic Small Outline (SN) - Narrow, 3.90 mm (.150 In.) Body [SOIC]

Note: For the most current package drawings, please see the Microchip Packaging Specification located at http://www.microchip.com/packaging

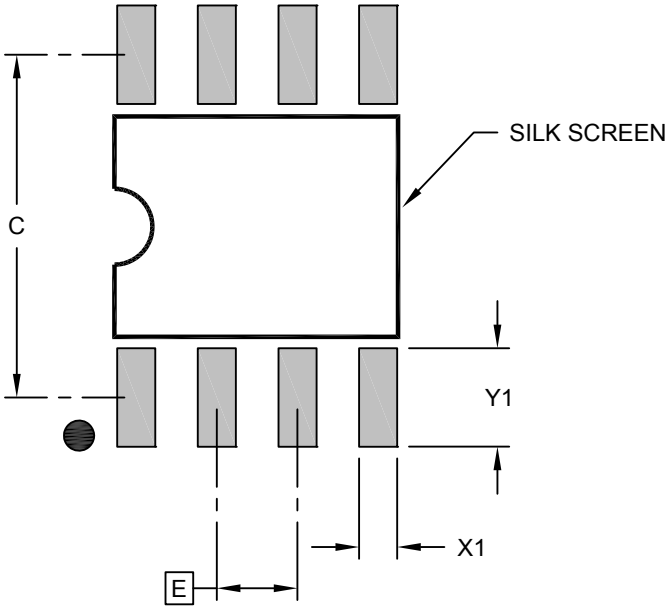

RECOMMENDED LAND PATTERN

Units		MILLIMETERS		
Dimension Limits		MIN	NOM	MAX
Contact Pitch	E	1.27 BSC		
Contact Pad Spacing	C		5.40	
Contact Pad Width (X8)	X1			0.60
Contact Pad Length (X8)	Y1			1.55

Notes:

1. Dimensioning and tolerancing per ASME Y14.5M
   BSC: Basic Dimension. Theoretically exact value shown without tolerances.

Microchip Technology Drawing C04-2057-SN Rev F

8-Lead Plastic Thin Shrink Small Outline (ST) – 4.4 mm Body [TSSOP]

Note: For the most current package drawings, please see the Microchip Packaging Specification located at http://www.microchip.com/packaging

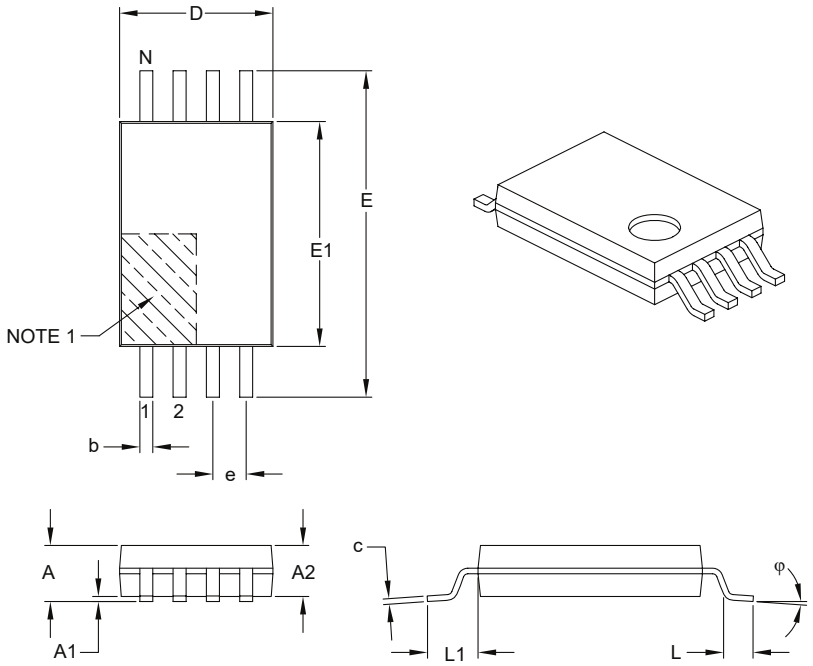

Units		MILLIMETERS		
Dimension Limits		MIN	NOM	MAX
Number of Pins	N	8		
Pitch	e	0.65 BSC		
Overall Height	A	–	–	1.20
Molded Package Thickness	A2	0.80	1.00	1.05
Standoff	A1	0.05	–	0.15
Overall Width	E	6.40 BSC		
Molded Package Width	E1	4.30	4.40	4.50
Molded Package Length	D	2.90	3.00	3.10
Foot Length	L	0.45	0.60	0.75
Footprint	L1	1.00 REF		
Foot Angle	φ	0°	–	8°
Lead Thickness	c	0.09	–	0.20
Lead Width	b	0.19	–	0.30

Notes:
1. Pin 1 visual index feature may vary, but must be located within the hatched area.
2. Dimensions D and E1 do not include mold flash or protrusions. Mold flash or protrusions shall not exceed 0.15 mm per side.
3. Dimensioning and tolerancing per ASME Y14.5M.
   BSC: Basic Dimension. Theoretically exact value shown without tolerances.
   REF: Reference Dimension, usually without tolerance, for information purposes only.

Microchip Technology Drawing C04-086B

8-Lead Plastic Thin Shrink Small Outline (ST) - 4.4 mm Body [TSSOP]

Note: For the most current package drawings, please see the Microchip Packaging Specification located at http://www.microchip.com/packaging

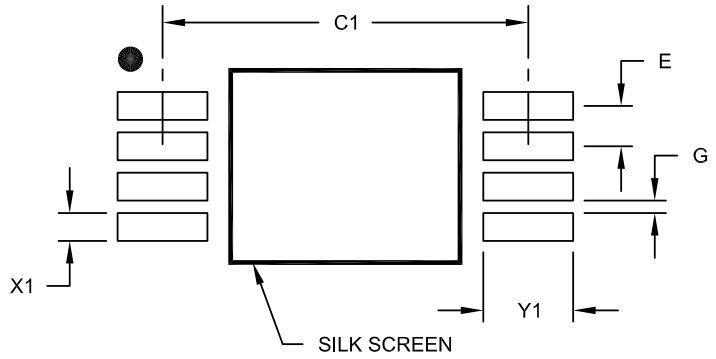

RECOMMENDED LAND PATTERN

Units		MILLIMETERS		
Dimension Limits		MIN	NOM	MAX
Contact Pitch	E	0.65 BSC		
Contact Pad Spacing	C1		5.90	
Contact Pad Width (X8)	X1			0.45
Contact Pad Length (X8)	Y1			1.45
Distance Between Pads	G	0.20		

Notes:

1. Dimensioning and tolerancing per ASME Y14.5M
   BSC: Basic Dimension. Theoretically exact value shown without tolerances.

Microchip Technology Drawing No. C04-2086A

8-Lead Ultra Thin Plastic Dual Flat, No Lead Package (Q4B) - 2x3 mm Body [UDFN] Atmel Legacy Global Package Code YNZ

Note: For the most current package drawings, please see the Microchip Packaging Specification located at http://www.microchip.com/packaging

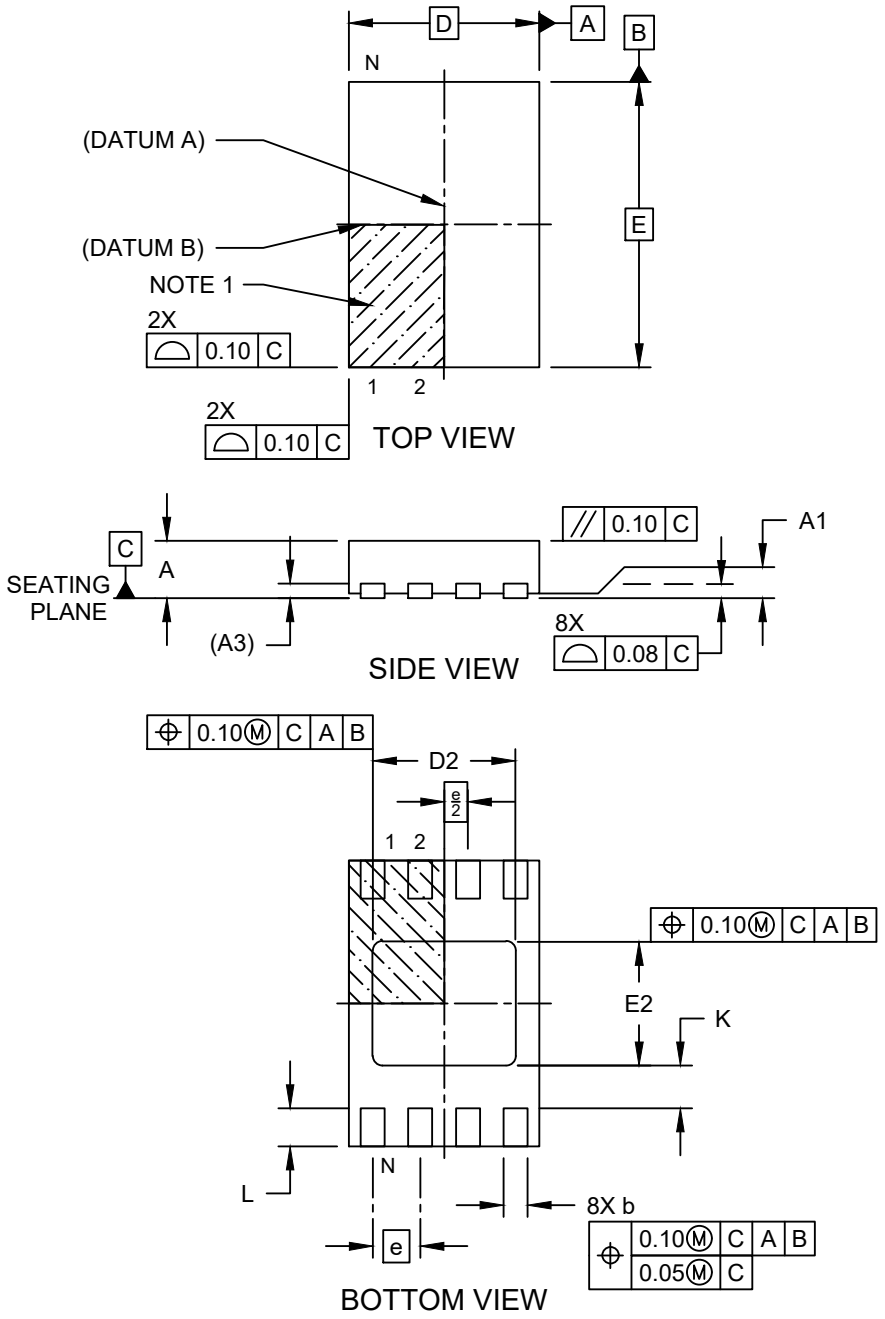

Microchip Technology Drawing C04-21355-Q4B Rev B Sheet 1 of 2

8-Lead Ultra Thin Plastic Dual Flat, No Lead Package (Q4B) - 2x3 mm Body [UDFN] Atmel Legacy Global Package Code YNZ

Note: For the most current package drawings, please see the Microchip Packaging Specification located at http://www.microchip.com/packaging

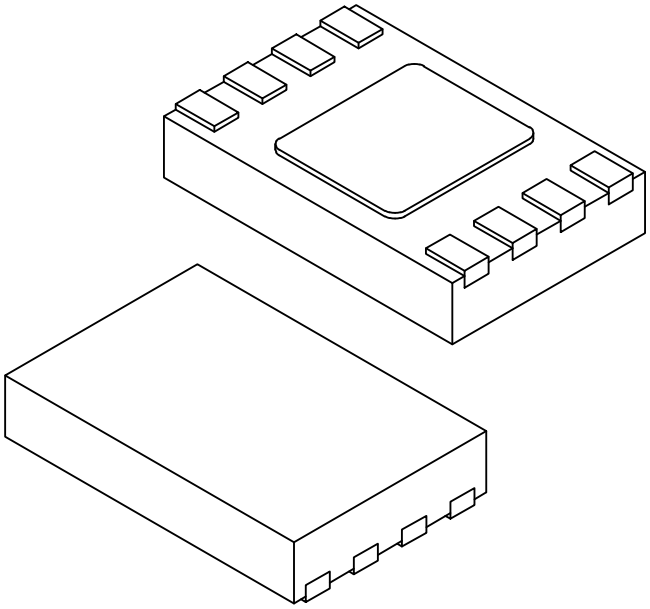

Units		MILLIMETERS		
Dimension Limits		MIN	NOM	MAX
Number of Terminals	N	8		
Pitch	e	0.50 BSC		
Overall Height	A	0.50	0.55	0.60
Standoff	A1	0.00	0.02	0.05
Terminal Thickness	A3	0.152 REF		
Overall Length	D	2.00 BSC		
Exposed Pad Length	D2	1.40	1.50	1.60
Overall Width	E	3.00 BSC		
Exposed Pad Width	E2	1.20	1.30	1.40
Terminal Width	b	0.18	0.25	0.30
Terminal Length	L	0.35	0.40	0.45
Terminal-to-Exposed-Pad	K	0.20	-	-

Notes:

1. Pin 1 visual index feature may vary, but must be located within the hatched area.
2. Package is saw singulated
3. Dimensioning and tolerancing per ASME Y14.5M

   BSC: Basic Dimension. Theoretically exact value shown without tolerances.

   REF: Reference Dimension, usually without tolerance, for information purposes only.

Microchip Technology Drawing C04-21355-Q4B Rev B Sheet 2 of 2

8-Lead Ultra Thin Plastic Dual Flat, No Lead Package (Q4B) - 2x3 mm Body [UDFN] Atmel Legacy Global Package Code YNZ

Note: For the most current package drawings, please see the Microchip Packaging Specification located at http://www.microchip.com/packaging

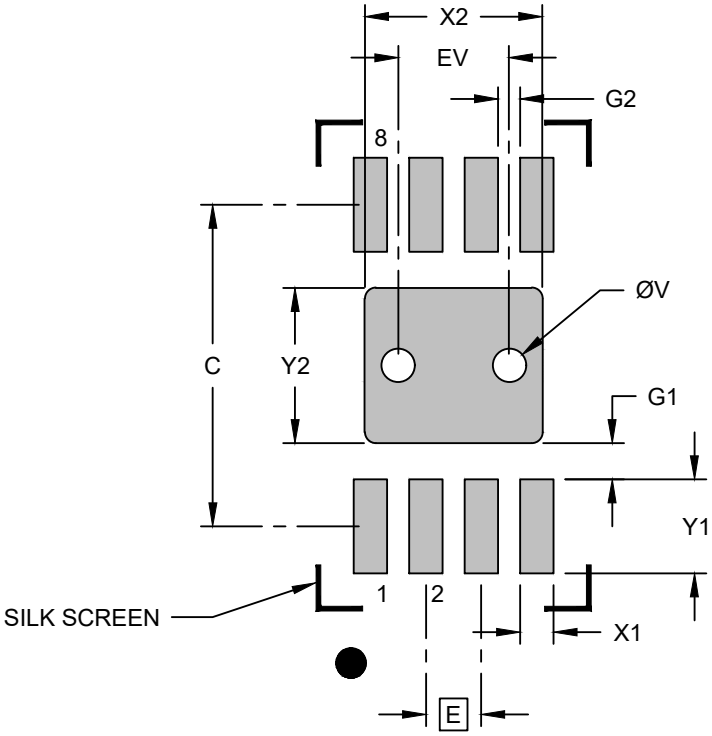

RECOMMENDED LAND PATTERN

Units		MILLIMETERS		
Dimension Limits		MIN	NOM	MAX
Contact Pitch	E		0.50 BSC	
Optional Center Pad Width	X2			1.60
Optional Center Pad Length	Y2			1.40
Contact Pad Spacing	C		2.90	
Contact Pad Width (X8)	X1			0.30
Contact Pad Length (X8)	Y1			0.85
Contact Pad to Center Pad (X8)	G1	0.33		
Contact Pad to Contact Pad (X6)	G2	0.20		
Thermal Via Diameter	V		0.30	
Thermal Via Pitch	EV		1.00	

Notes:

1. Dimensioning and tolerancing per ASME Y14.5M
   BSC: Basic Dimension. Theoretically exact value shown without tolerances.
2. For best soldering results, thermal vias, if used, should be filled or tented to avoid solder loss during reflow process

Microchip Technology Drawing C04-23355-Q4B Rev B

10. Revision History

Revision B (May 2020)
Corrected operating ranges for Table 4-3. Updated UDFN package drawing.

Revision A (December 2019)
Updated to Microchip template. Microchip DS20006285 replaces Atmel document 8802. Updated Part Marking Information. Added ESD rating. Added missing IIL Max. parameter. Removed lead finish designation. Removed the Automotive Grade 2 option. Updated POR recommendations section. Updated trace code format in package markings. Updated formatting throughout for clarification. Updated the SOIC, TSSOP and UDFN package drawings to the Microchip equivalents.

Atmel Document 8802 Revision E (December 2016)
Decreased I_{SB1} maximum from 9 µA to 2 µA

Atmel Document 8802 Revision D (September 2016)
Added the Automotive Grade 2 and 3 options and UDFN options. Updated 8S1 and 8X package drawings, template/reorganization, and disclaimer page.

Atmel Document 8802 Revision C (November 2012)
Updated ordering code tables. Updated 8X package drawing.

Atmel Document 8802 Revision B (October 2012)
Removed preliminary status. Updated Atmel logos and disclaimer/copy page.

Atmel Document 8802 Revision A (March 2012)
Initial document release.

The Microchip Website

Microchip provides online support via our website at http://www.microchip.com/. This website is used to make files and information easily available to customers. Some of the content available includes:

- **Product Support** – Data sheets and errata, application notes and sample programs, design resources, user's guides and hardware support documents, latest software releases and archived software
- **General Technical Support** – Frequently Asked Questions (FAQs), technical support requests, online discussion groups, Microchip design partner program member listing
- **Business of Microchip** – Product selector and ordering guides, latest Microchip press releases, listing of seminars and events, listings of Microchip sales offices, distributors and factory representatives

Product Change Notification Service

Microchip's product change notification service helps keep customers current on Microchip products. Subscribers will receive email notification whenever there are changes, updates, revisions or errata related to a specified product family or development tool of interest.

To register, go to http://www.microchip.com/pcn and follow the registration instructions.

Customer Support

Users of Microchip products can receive assistance through several channels:

- Distributor or Representative
- Local Sales Office
- Embedded Solutions Engineer (ESE)
- Technical Support

Customers should contact their distributor, representative or ESE for support. Local sales offices are also available to help customers. A listing of sales offices and locations is included in this document.

Technical support is available through the website at: http://www.microchip.com/support

Product Identification System

To order or obtain information, e.g., on pricing or delivery, refer to the factory or the listed sales office.

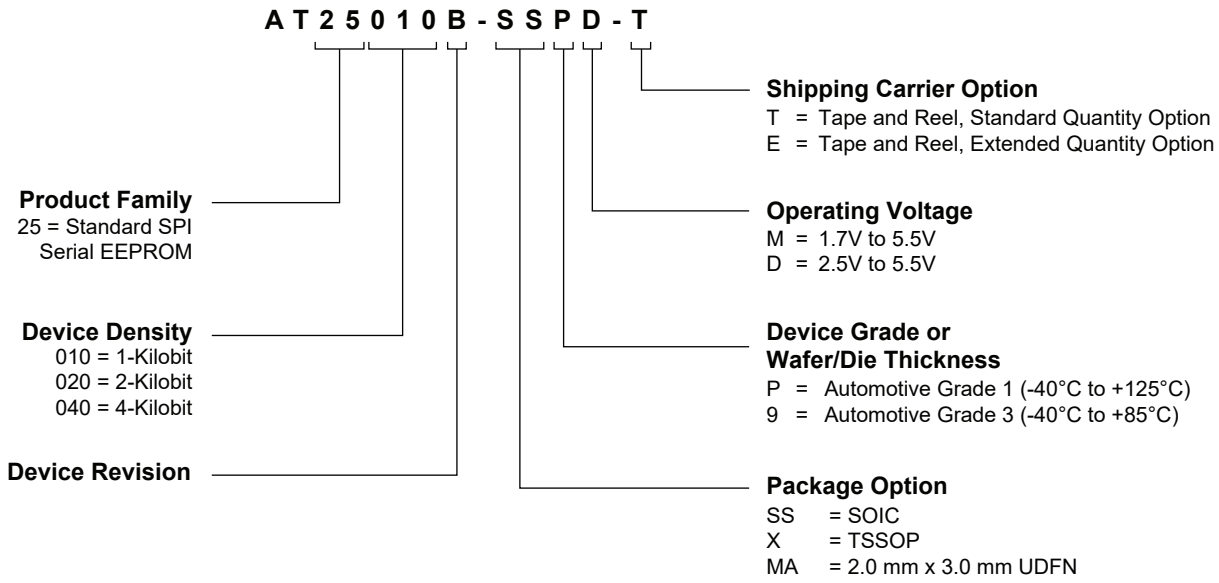

Examples:

Device	Package	Package Drawing Code	Package Option	Shipping Carrier Option	Automotive Grade
AT25010B-SSPD-T	SOIC	SN	SS	Tape and Reel	Grade 1
AT25040B-SSPD-T	SOIC	SN	SS	Tape and Reel	Grade 1
AT25020B-SS9M-T	SOIC	SN	SS	Tape and Reel	Grade 3
AT25040B-SS9M-T	SOIC	SN	SS	Tape and Reel	Grade 3
AT25010B-XPD-T	TSSOP	ST	X	Tape and Reel	Grade 1
AT25020B-XPD-T	TSSOP	ST	X	Tape and Reel	Grade 1
AT25010B-X9M-T	TSSOP	ST	X	Tape and Reel	Grade 3
AT25040B-X9M-T	TSSOP	ST	X	Tape and Reel	Grade 3
AT25010B-MAPD-T	UDFN	Q4B	MA	Tape and Reel	Grade 1
AT25040B-MAPD-T	UDFN	Q4B	MA	Tape and Reel	Grade 1
AT25020B-MAPD-E	UDFN	Q4B	MA	Extended Qty. Tape and Reel	Grade 1
AT25010B-MA9M-T	UDFN	Q4B	MA	Tape and Reel	Grade 3
AT25020B-MA9M-E	UDFN	Q4B	MA	Extended Qty. Tape and Reel	Grade 3
AT25040B-MA9M-T	UDFN	Q4B	MA	Tape and Reel	Grade 3

Microchip Devices Code Protection Feature

Note the following details of the code protection feature on Microchip devices:

- Microchip products meet the specification contained in their particular Microchip Data Sheet.
- Microchip believes that its family of products is one of the most secure families of its kind on the market today, when used in the intended manner and under normal conditions.
- There are dishonest and possibly illegal methods used to breach the code protection feature. All of these methods, to our knowledge, require using the Microchip products in a manner outside the operating specifications contained in Microchip's Data Sheets. Most likely, the person doing so is engaged in theft of intellectual property.
- Microchip is willing to work with the customer who is concerned about the integrity of their code.
- Neither Microchip nor any other semiconductor manufacturer can guarantee the security of their code. Code protection does not mean that we are guaranteeing the product as "unbreakable."

Code protection is constantly evolving. We at Microchip are committed to continuously improving the code protection features of our products. Attempts to break Microchip's code protection feature may be a violation of the Digital Millennium Copyright Act. If such acts allow unauthorized access to your software or other copyrighted work, you may have a right to sue for relief under that Act.

Legal Notice

Information contained in this publication regarding device applications and the like is provided only for your convenience and may be superseded by updates. It is your responsibility to ensure that your application meets with your specifications. MICROCHIP MAKES NO REPRESENTATIONS OR WARRANTIES OF ANY KIND WHETHER EXPRESS OR IMPLIED, WRITTEN OR ORAL, STATUTORY OR OTHERWISE, RELATED TO THE INFORMATION, INCLUDING BUT NOT LIMITED TO ITS CONDITION, QUALITY, PERFORMANCE, MERCHANTABILITY OR FITNESS FOR PURPOSE. Microchip disclaims all liability arising from this information and its use. Use of Microchip devices in life support and/or safety applications is entirely at the buyer's risk, and the buyer agrees to defend, indemnify and hold harmless Microchip from any and all damages, claims, suits, or expenses resulting from such use. No licenses are conveyed, implicitly or otherwise, under any Microchip intellectual property rights unless otherwise stated.

Trademarks

The Microchip name and logo, the Microchip logo, Adaptec, AnyRate, AVR, AVR logo, AVR Freaks, BesTime, BitCloud, chipKIT, chipKIT logo, CryptoMemory, CryptoRF, dsPIC, FlashFlex, flexPWR, HELDO, IGLOO, JukeBlox, KeeLoq, Kleer, LANCheck, LinkMD, maXStylus, maXTouch, MediaLB, megaAVR, Microsemi, Microsemi logo, MOST, MOST logo, MPLAB, OptoLyzer, PackeTime, PIC, picoPower, PICSTART, PIC32 logo, PolarFire, Prochip Designer, QTouch, SAM-BA, SenGenuity, SpyNIC, SST, SST Logo, SuperFlash, Symmetricom, SyncServer, Tachyon, TempTrackr, TimeSource, tinyAVR, UNI/O, Vectron, and XMEGA are registered trademarks of Microchip Technology Incorporated in the U.S.A. and other countries.

APT, ClockWorks, The Embedded Control Solutions Company, EtherSynch, FlashTec, Hyper Speed Control, HyperLight Load, IntelliMOS, Libero, motorBench, mTouch, Powermite 3, Precision Edge, ProASIC, ProASIC Plus, ProASIC Plus logo, Quiet-Wire, SmartFusion, SyncWorld, Temux, TimeCesium, TimeHub, TimePictra, TimeProvider, Vite, WinPath, and ZL are registered trademarks of Microchip Technology Incorporated in the U.S.A.

Adjacent Key Suppression, AKS, Analog-for-the-Digital Age, Any Capacitor, AnyIn, AnyOut, BlueSky, BodyCom, CodeGuard, CryptoAuthentication, CryptoAutomotive, CryptoCompanion, CryptoController, dsPICDEM, dsPICDEM.net, Dynamic Average Matching, DAM, ECAN, EtherGREEN, In-Circuit Serial Programming, ICSP, INICnet, Inter-Chip Connectivity, JitterBlocker, KleerNet, KleerNet logo, memBrain, Mindi, MiWi, MPASM, MPF, MPLAB Certified logo, MPLIB, MPLINK, MultiTRAK, NetDetach, Omniscient Code Generation, PICDEM, PICDEM.net, PICkit, PICtail, PowerSmart, PureSilicon, QMatrix, REAL ICE, Ripple Blocker, SAM-ICE, Serial Quad I/O, SMART-I.S., SQI, SuperSwitcher, SuperSwitcher II, Total Endurance, TSHARC, USBCheck, VariSense, ViewSpan, WiperLock, Wireless DNA, and ZENA are trademarks of Microchip Technology Incorporated in the U.S.A. and other countries.

SQTP is a service mark of Microchip Technology Incorporated in the U.S.A.

The Adaptec logo, Frequency on Demand, Silicon Storage Technology, and Symmcom are registered trademarks of Microchip Technology Inc. in other countries.

GestIC is a registered trademark of Microchip Technology Germany II GmbH & Co. KG, a subsidiary of Microchip Technology Inc., in other countries.

All other trademarks mentioned herein are property of their respective companies.

© 2020, Microchip Technology Incorporated, Printed in the U.S.A., All Rights Reserved.

ISBN: 978-1-5224-6081-7

AMBA, Arm, Arm7, Arm7TDMI, Arm9, Arm11, Artisan, big.LITTLE, Cordio, CoreLink, CoreSight, Cortex, DesignStart, DynamIQ, Jazelle, Keil, Mali, Mbed, Mbed Enabled, NEON, POP, RealView, SecurCore, Socrates, Thumb, TrustZone, ULINK, ULINK2, ULINK-ME, ULINK-PLUS, ULINKpro, µVision, Versatile are trademarks or registered trademarks of Arm Limited (or its subsidiaries) in the US and/or elsewhere.

Quality Management System

For information regarding Microchip's Quality Management Systems, please visit http://www.microchip.com/quality.

Worldwide Sales and Service

AMERICAS	ASIA/PACIFIC	ASIA/PACIFIC	EUROPE
Corporate Office 2355 West Chandler Blvd. Chandler, AZ 85224-6199 Tel: 480-792-7200 Fax: 480-792-7277 Technical Support: http://www.microchip.com/support Web Address: http://www.microchip.com **Atlanta** Duluth, GA Tel: 678-957-9614 Fax: 678-957-1455 **Austin, TX** Tel: 512-257-3370 **Boston** Westborough, MA Tel: 774-760-0087 Fax: 774-760-0088 **Chicago** Itasca, IL Tel: 630-285-0071 Fax: 630-285-0075 **Dallas** Addison, TX Tel: 972-818-7423 Fax: 972-818-2924 **Detroit** Novi, MI Tel: 248-848-4000 **Houston, TX** Tel: 281-894-5983 **Indianapolis** Noblesville, IN Tel: 317-773-8323 Fax: 317-773-5453 Tel: 317-536-2380 **Los Angeles** Mission Viejo, CA Tel: 949-462-9523 Fax: 949-462-9608 Tel: 951-273-7800 **Raleigh, NC** Tel: 919-844-7510 **New York, NY** Tel: 631-435-6000 **San Jose, CA** Tel: 408-735-9110 Tel: 408-436-4270 **Canada - Toronto** Tel: 905-695-1980 Fax: 905-695-2078	**Australia - Sydney** Tel: 61-2-9868-6733 **China - Beijing** Tel: 86-10-8569-7000 **China - Chengdu** Tel: 86-28-8665-5511 **China - Chongqing** Tel: 86-23-8980-9588 **China - Dongguan** Tel: 86-769-8702-9880 **China - Guangzhou** Tel: 86-20-8755-8029 **China - Hangzhou** Tel: 86-571-8792-8115 **China - Hong Kong SAR** Tel: 852-2943-5100 **China - Nanjing** Tel: 86-25-8473-2460 **China - Qingdao** Tel: 86-532-8502-7355 **China - Shanghai** Tel: 86-21-3326-8000 **China - Shenyang** Tel: 86-24-2334-2829 **China - Shenzhen** Tel: 86-755-8864-2200 **China - Suzhou** Tel: 86-186-6233-1526 **China - Wuhan** Tel: 86-27-5980-5300 **China - Xian** Tel: 86-29-8833-7252 **China - Xiamen** Tel: 86-592-2388138 **China - Zhuhai** Tel: 86-756-3210040	**India - Bangalore** Tel: 91-80-3090-4444 **India - New Delhi** Tel: 91-11-4160-8631 **India - Pune** Tel: 91-20-4121-0141 **Japan - Osaka** Tel: 81-6-6152-7160 **Japan - Tokyo** Tel: 81-3-6880- 3770 **Korea - Daegu** Tel: 82-53-744-4301 **Korea - Seoul** Tel: 82-2-554-7200 **Malaysia - Kuala Lumpur** Tel: 60-3-7651-7906 **Malaysia - Penang** Tel: 60-4-227-8870 **Philippines - Manila** Tel: 63-2-634-9065 **Singapore** Tel: 65-6334-8870 **Taiwan - Hsin Chu** Tel: 886-3-577-8366 **Taiwan - Kaohsiung** Tel: 886-7-213-7830 **Taiwan - Taipei** Tel: 886-2-2508-8600 **Thailand - Bangkok** Tel: 66-2-694-1351 **Vietnam - Ho Chi Minh** Tel: 84-28-5448-2100	**Austria - Wels** Tel: 43-7242-2244-39 Fax: 43-7242-2244-393 **Denmark - Copenhagen** Tel: 45-4485-5910 Fax: 45-4485-2829 **Finland - Espoo** Tel: 358-9-4520-820 **France - Paris** Tel: 33-1-69-53-63-20 Fax: 33-1-69-30-90-79 **Germany - Garching** Tel: 49-8931-9700 **Germany - Haan** Tel: 49-2129-3766400 **Germany - Heilbronn** Tel: 49-7131-72400 **Germany - Karlsruhe** Tel: 49-721-625370 **Germany - Munich** Tel: 49-89-627-144-0 Fax: 49-89-627-144-44 **Germany - Rosenheim** Tel: 49-8031-354-560 **Israel - Ra'anana** Tel: 972-9-744-7705 **Italy - Milan** Tel: 39-0331-742611 Fax: 39-0331-466781 **Italy - Padova** Tel: 39-049-7625286 **Netherlands - Drunen** Tel: 31-416-690399 Fax: 31-416-690340 **Norway - Trondheim** Tel: 47-72884388 **Poland - Warsaw** Tel: 48-22-3325737 **Romania - Bucharest** Tel: 40-21-407-87-50 **Spain - Madrid** Tel: 34-91-708-08-90 Fax: 34-91-708-08-91 **Sweden - Gothenberg** Tel: 46-31-704-60-40 **Sweden - Stockholm** Tel: 46-8-5090-4654 **UK - Wokingham** Tel: 44-118-921-5800 Fax: 44-118-921-5820