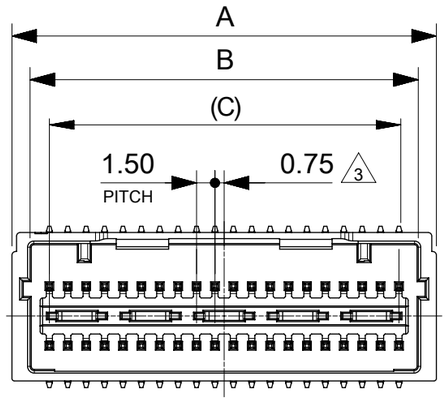

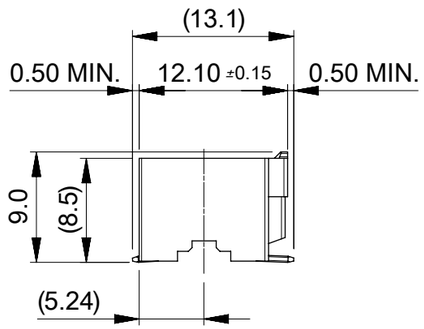

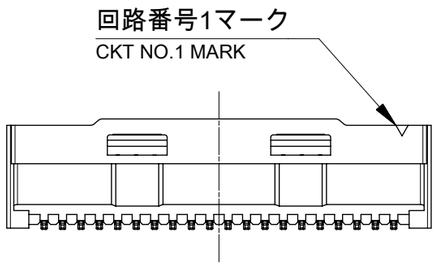

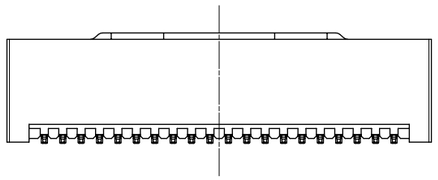

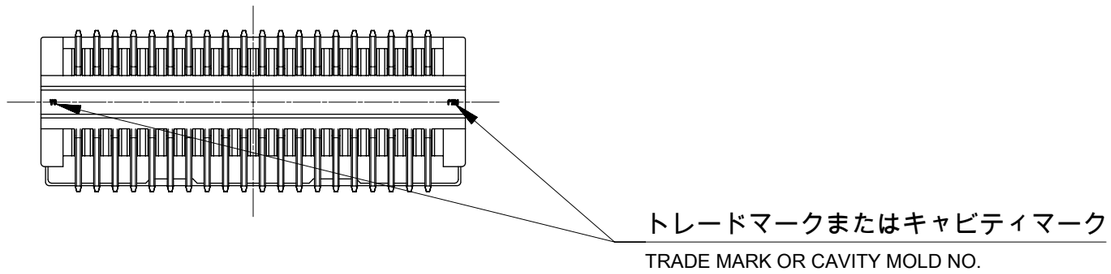

NOTE

1. 嵌合相手：201644シリーズ
   MATE WITH:201644 SERIES.

△2 製品番号
MATERIAL NO.

201645 0** *
極数 CIRCUIT SIZE
色 COLOR

NO.	COLOR
0	NATURAL
1	BLACK

△3 偶数極に適用
APPLY FOR CKT SIZE EQUAL EVEN.

4. 端子テール部及びネイルの平坦度は0.12MAX.とする
   TAIL AND NAIL COPLANARITY TO BE 0.12 MAX.

D	C	B	A	オーダー番号 ORDER NO.	極数 CKT NO.
21.45	28.50	31.65	34.60	201645040*	40
21.45	27.00	30.15	33.10	201645038*	38
21.45	25.50	28.65	31.60	201645036*	36
17.85	24.00	27.15	30.10	201645034*	34
17.85	22.50	25.65	28.60	201645032*	32
17.85	21.00	24.15	27.10	201645030*	30
17.85	19.50	22.65	25.60	201645028*	28
12.00	18.00	21.15	24.10	201645026*	26
12.00	16.50	19.65	22.60	201645024*	24
12.00	15.00	18.15	21.10	201645022*	22
12.00	13.50	16.65	19.60	201645020*	20
8.50	12.00	15.15	18.10	201645018*	18
8.50	10.50	13.65	16.60	201645016*	16
8.50	9.00	12.15	15.10	201645014*	14
5.55	7.50	10.65	13.60	201645012*	12
5.55	6.00	9.15	12.10	201645010*	10

部品 PART	材質 MATERIAL	
ハウジング HOUSING	ポリアミド(PA), ガラス充填, UL94V-0, 色：注記参照 POLYAMIDE(PA), GLASS FILLED, UL94V-0, COLOR: SEE NOTE	
ターミナル TERMINAL	黄銅 BRASS	
	錫めっき (リフロー処理), 1.0μm以上 TIN PLATED (HEAT TREATED MATTE TIN), 1.0μm MIN.	前めっき PRE-PLATED
	ニッケルめっき(下地), 0.5μm以上 NICKEL (UNDER-PLATED), 0.5μm MIN.	

DOCUMENT STATUS	P1	RELEASE DATE	2025/07/01 07:04:08

THIS DRAWING CONTAINS INFORMATION THAT IS PROPRIETARY TO MOLEX ELECTRONIC TECHNOLOGIES, LLC AND SHOULD NOT BE USED WITHOUT WRITTEN PERMISSION

DIMENSION UNITS	SCALE
mm	2:1

GENERAL TOLERANCES (UNLESS SPECIFIED)

ANGULAR TOL	±	3.0 °
4 PLACES	±	0.2
3 PLACES	±	0.2
2 PLACES	±	0.2
1 PLACE	±	0.2
0 PLACES	±	0.2

DRAFT WHERE APPLICABLE MUST REMAIN WITHIN DIMENSIONS

CURRENT REV DESC: REMOVED OBSOLETED PART NUMBERS AS PER PCN #515183

EC NO: 826030
DRWN: PRANAA 2025/06/25
CHK'D: GGA 2025/07/01
APPR: GGA 2025/07/01

INITIAL REVISION:
DRWN: MIKEDA01 2017/02/09
APPR: TKANEKO 2017/02/15

THIRD ANGLE PROJECTION | DRAWING: A3-SIZE | SERIES: 201645

molex

SPOT-ON1.5
DUAL PLUG ASSY W/O NAIL

PRODUCT CUSTOMER DRAWING

DOCUMENT NUMBER	DOC TYPE	DOC PART	REVISION
2016450001	PSD	000	E1

MATERIAL NUMBER	CUSTOMER	SHEET NUMBER
2016450***	GENERAL	1 OF 3

FORMAT: master-tb-prod-A3
REVISION: J1
DATE: 2021/05/01

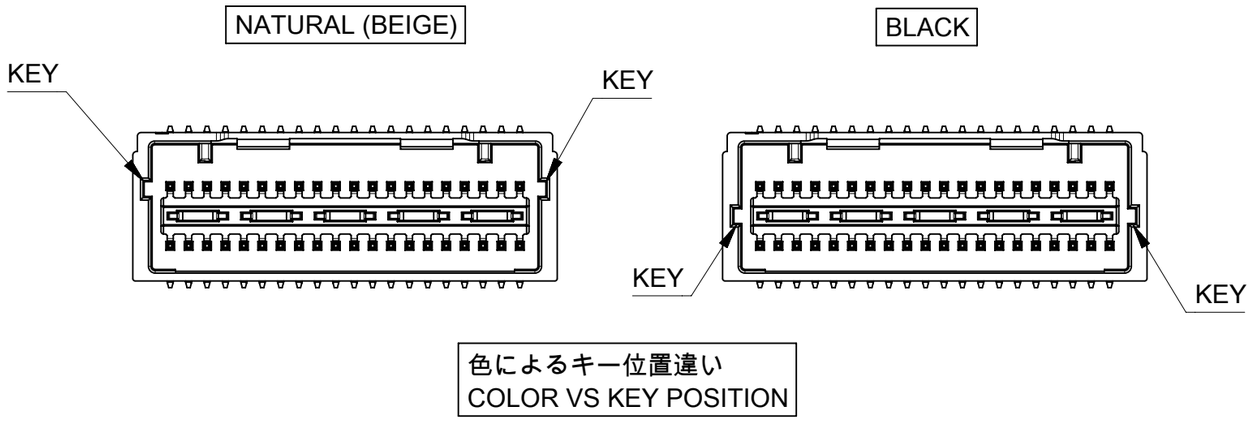

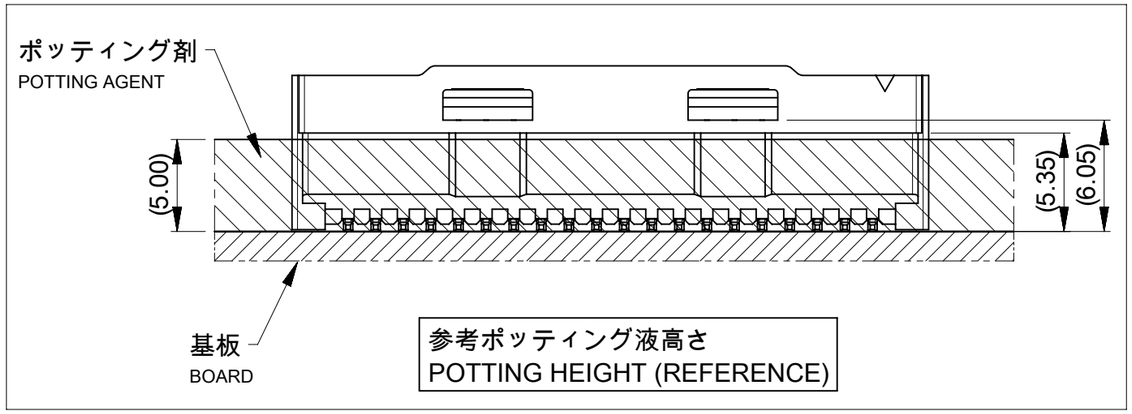

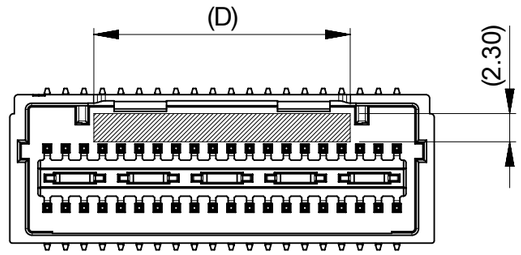

吸着範囲
VACCUME AREA

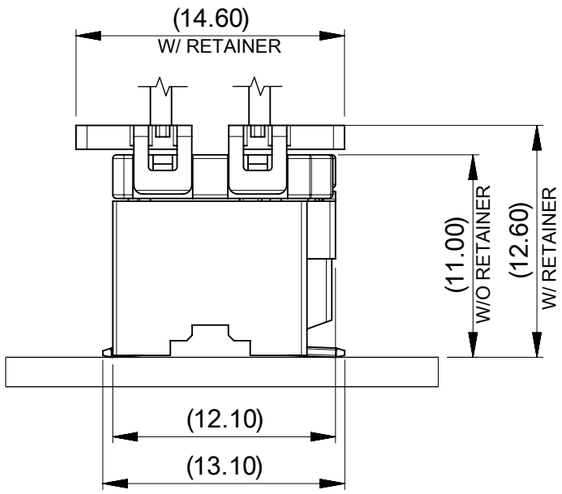

嵌合高さ
MATING HEIGHT

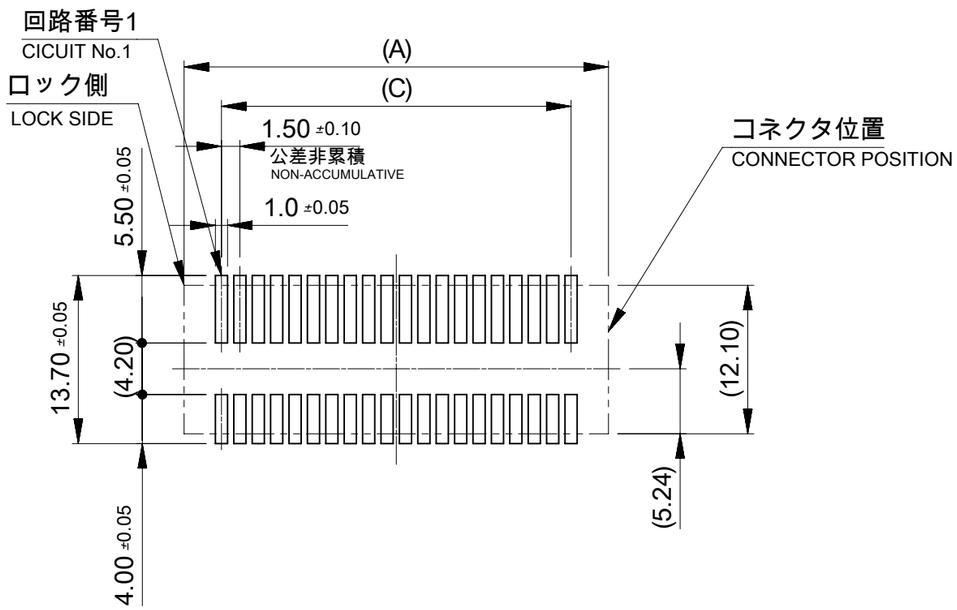

推奨基板パターンレイアウト
RECCOMENDED PCB PATTERN LAYOUT

メタルマスク厚：0.15
METAL MASK THICKNESS: 0.15
開口率: 100%
APARTURE RATILO: 100%

BLACK	NATURAL (BEIGE)	HOUSING COLOR
2016450401	2016450400	40
2016450381	---	38
2016450361	2016450360	36
2016450341	---	34
2016450321	---	32
2016450301	2016450300	30
2016450281	---	28
2016450261	---	26
2016450241	2016450240	24
2016450221	2016450220	22
2016450201	2016450200	20
2016450181	2016450180	18
2016450161	2016450160	16
2016450141	---	14
2016450121	2016450120	12
2016450101	2016450100	10

エンボステープ梱包
EMBOSSED TAPE PKG

2 オーダー番号
ORDER NO.

極数
CKT NO.

THIS DRAWING CONTAINS INFORMATION THAT IS PROPRIETARY TO MOLEX ELECTRONIC TECHNOLOGIES, LLC AND SHOULD NOT BE USED WITHOUT WRITTEN PERMISSION

DIMENSION UNITS	SCALE
mm	2:1

GENERAL TOLERANCES (UNLESS SPECIFIED)

ANGULAR TOL	±	3.0 °
4 PLACES	±	0.2
3 PLACES	±	0.2
2 PLACES	±	0.2
1 PLACE	±	0.2
0 PLACES	±	0.2

DRAFT WHERE APPLICABLE MUST REMAIN WITHIN DIMENSIONS

CURRENT REV DESC: REMOVED OBSOLETED PART NUMBERS AS PER PCN #515183

EC NO: 826030
DRWN: PRANAA 2025/06/25
CHK'D: GGA 2025/07/01
APPR: GGA 2025/07/01

INITIAL REVISION:
DRWN: MIKEDA01 2017/02/09
APPR: TKANEKO 2017/02/15

THIRD ANGLE PROJECTION | DRAWING: A3-SIZE | SERIES: 201645

molex

SPOT-ON1.5
DUAL PLUG ASSY W/O NAIL

PRODUCT CUSTOMER DRAWING

DOCUMENT NUMBER	DOC TYPE	DOC PART	REVISION
2016450001	PSD	000	E1

MATERIAL NUMBER	CUSTOMER	SHEET NUMBER
2016450***	GENERAL	2 OF 3

DOCUMENT STATUS	P1	RELEASE DATE	2025/07/01 07:04:08

FORMAT: master-tb-prod-A3
REVISION: J1
DATE: 2021/05/01

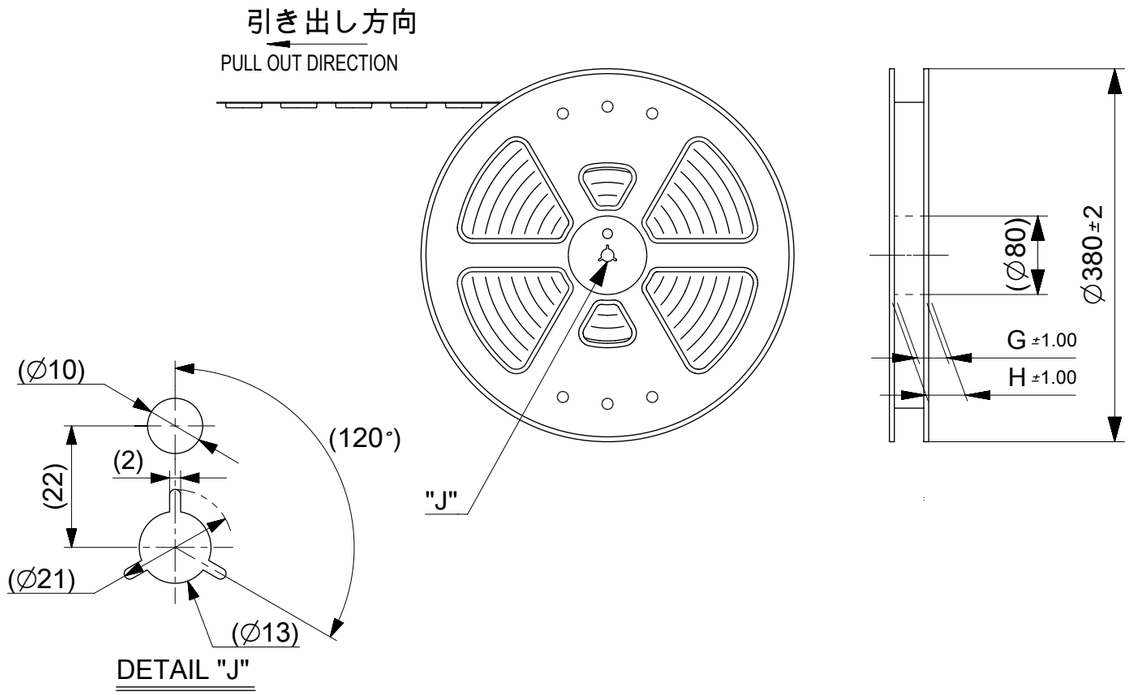

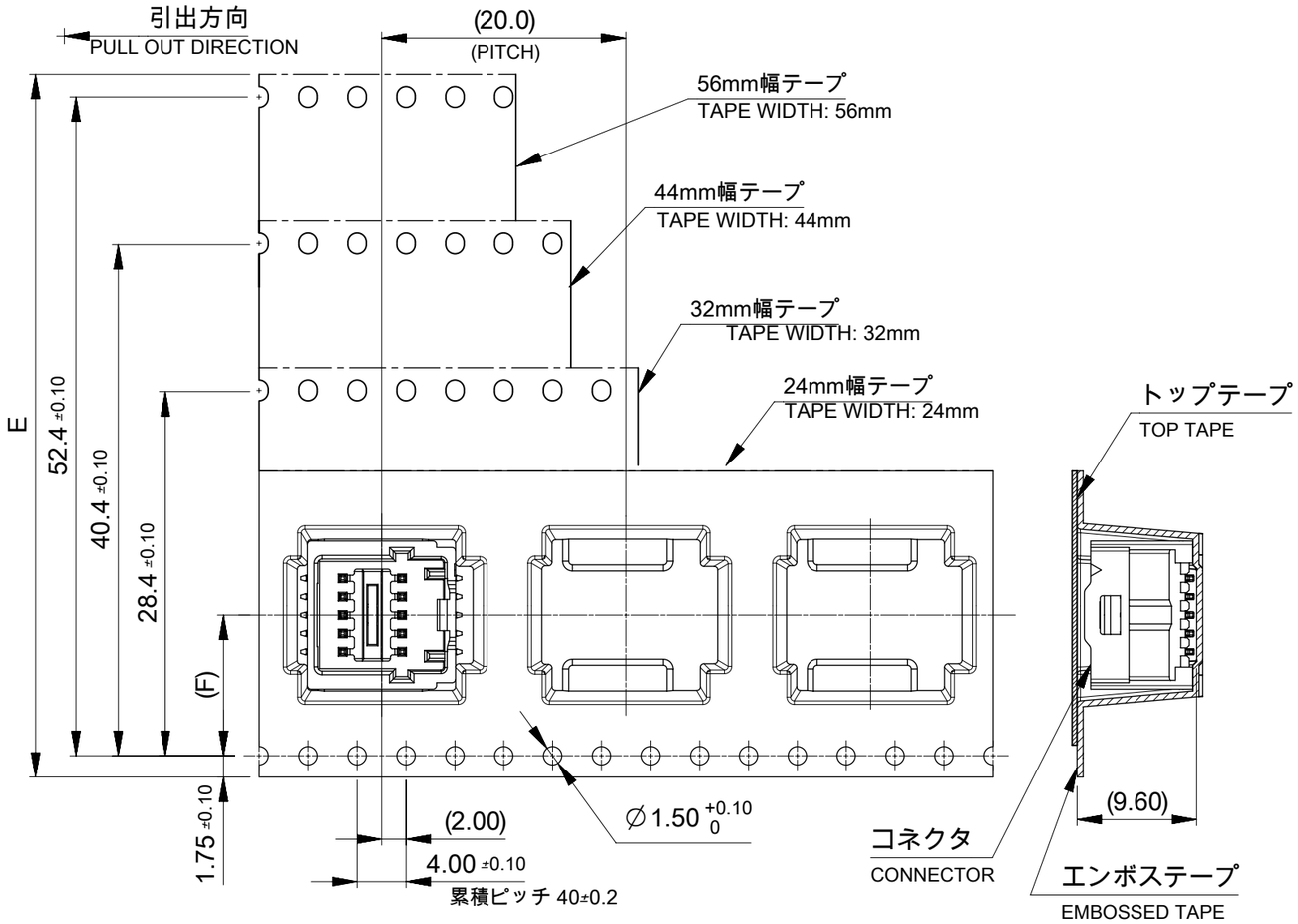

60.4	56.4	26.2	56 ±0.3	201645040*	40
				201645038*	38
48.4	44.4	20.2	44 ±0.3	201645036*	36
				201645034*	34
				201645032*	32
				201645030*	30
				201645028*	28
				201645026*	26
				201645024*	24
				201645022*	22
36.4	32.4	14.2	32 ±0.3	201645020*	20
				201645018*	18
				201645016*	16
				201645014*	14
28.4	24.4	11.5	24 +0.3 -0.1	201645012*	12
				201645010*	10
H	G	F	E エンボステープ幅 WIDTH OF TAPE	エンボステープ梱包 EMBOSSED TAPE PKG オーダー番号 ORDER NO.	極数 CKT NO.

NOTES

5. 梱包数量： 450個 / リール
NUMBER OF CONNECTORS : 450 PCS/REEL.

6. リードテープ長さ
LEAD TAPE LENGTH.

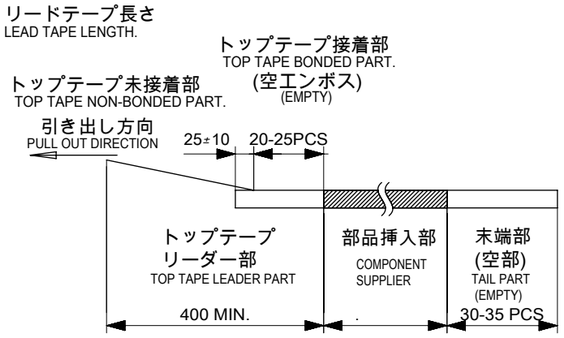

7. 材料
キャリアテープ：ポリスチレン(PS)、その他
トップテープ：ポリエステル(PET)、その他
リール：ポリスチレン(PS)リサイクル材を含む
MATERIALS
CARRIER TAPE : POLYSTYRENE(PS), OTHER
TOP TAPE : POLYESTER(PET), OTHER
REEL : POLYSTYRENE(PS) RECYCLE MATERIAL CONTAINED

THIS DRAWING CONTAINS INFORMATION THAT IS PROPRIETARY TO MOLEX ELECTRONIC TECHNOLOGIES, LLC AND SHOULD NOT BE USED WITHOUT WRITTEN PERMISSION

DIMENSION UNITS	SCALE
mm	2:1

GENERAL TOLERANCES (UNLESS SPECIFIED)

ANGULAR TOL	±	3.0 °
4 PLACES	±	0.2
3 PLACES	±	0.2
2 PLACES	±	0.2
1 PLACE	±	0.2
0 PLACES	±	0.2

DRAFT WHERE APPLICABLE MUST REMAIN WITHIN DIMENSIONS

CURRENT REV DESC: REMOVED OBSOLETED PART NUMBERS AS PER PCN #515183

EC NO: 826030
DRWN: PRANAA 2025/06/25
CHK'D: GGA 2025/07/01
APPR: GGA 2025/07/01

INITIAL REVISION:
DRWN: MIKEDA01 2017/02/09
APPR: TKANEKO 2017/02/15

THIRD ANGLE PROJECTION | DRAWING: A3-SIZE | SERIES: 201645

molex

SPOT-ON1.5
DUAL PLUG ASSY W/O NAIL

PRODUCT CUSTOMER DRAWING

DOCUMENT NUMBER	DOC TYPE	DOC PART	REVISION
2016450001	PSD	000	E1

MATERIAL NUMBER	CUSTOMER	SHEET NUMBER
2016450***	GENERAL	3 OF 3

DOCUMENT STATUS	P1	RELEASE DATE	2025/07/01	07:04:08

FORMAT: master-tb-prod-A3
REVISION: J1
DATE: 2021/05/01