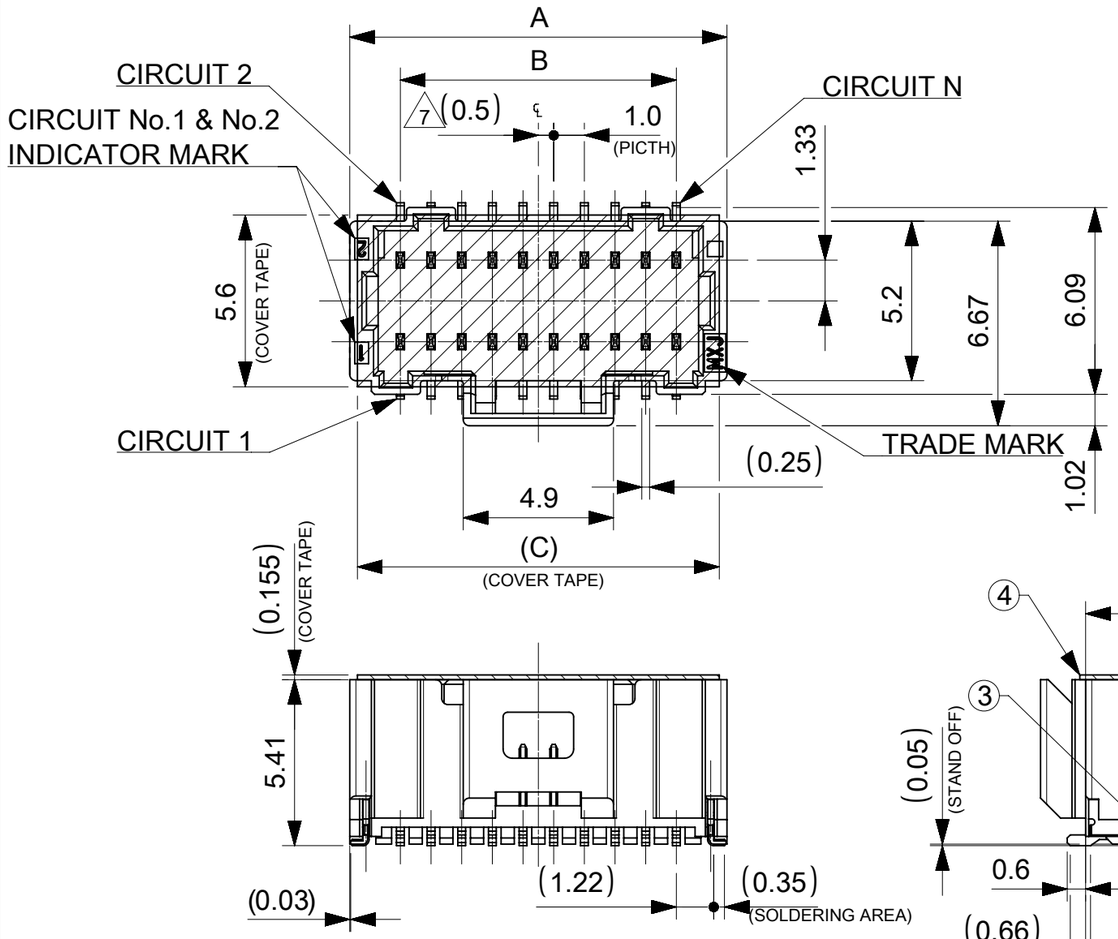

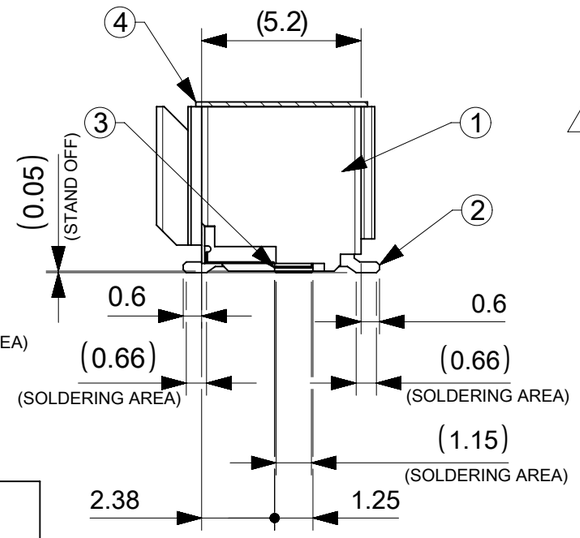

NOTES

1. 材料及び仕上げ(めっき仕様)：TABLE 1 参照
MATERIAL AND FINISHES : SEE TABLE 1
2. 製品仕様書：5011890000-PS 001
PRODUCT SPECIFICATION:
3. 梱包形態：SEE SHEET 3
PACKAGING INFORMATION:
4. 嵌合相手：501189 シリーズ
MATES WITH:501189 SERIES
5. アプリケーション仕様書(コネクタ取扱い説明書)：5011890000-AS 000
APPLICATION SPECIFICATION(CONNECTOR MANUAL):
6. ソルダーピン及びネイルの平坦度:0.1 mm MAX.
SOLDER PIN AND NAIL COPLANARITY: 0.1 mm MAX.
7. 極数/2=偶数に適応
APPLICABLE FOR CIRCUIT SIZE/2 = EVEN
8. 本製品は複数の金めっき厚を展開しております。その他の金めっき厚は以下の図面を御参照下さい。
THIS PRODUCT EXIST MULTIPLE GOLD PLATING.
PLEASE REFER TO THE FOLLOWING DRAWING FOR OTHER GOLD PLATING THICKNESS.

GOLD PLATING THICKNESS [MICRO-METER MIN.]	SERIES No.	DRAWING No.
0.1	501190	5011900000-SD PSD 000
0.76	203565	2035650000-SD PSD 000

9. 発注番号：TABLE 2 参照
ORDER No. : SEE TABLE 2

203564 ** * *

極数 CIRCUIT SIZE	ハウジングカラー HOUSING COLOR	製品識別番号 IDENTIFICATION NUMBER
	1:NATURAL(BEIGE)	7:EMBOSSED PACKAGE

1 TABLE 1

番号 NO.	部品 PART	材質 MATERIAL	
①	ウエハー WAFER	ポリアミド(PA), UL94V-0, 色：SEE TABLE 2 POLYAMIDE(PA), UL94V-0, COLOR : SEE TABLE 2	
②	ソルダーピン SOLDER PIN	リン青銅 PHOSPHOR BRONZE	
		接点部 CONTACT AREA	金めっき： 0.38 MICRO-METER MIN. GOLD PLATING
		テール部 TAIL AREA	金めっき GOLD PLATING
		下地めっき UNDER PLATING	ニッケルめっき：1.27 MICRO-METER MIN. NICKEL
③	ネイル NAIL	リン青銅 PHOSPHOR BRONZE	
		テール部 TAIL AREA	錫めっき： 1.0 MICRO-METER MIN. MATTE TIN PLATING
		下地めっき UNDER PLATING	ニッケルめっき：1.0 MICRO-METER MIN. NICKEL
④	カバーテープ COVER TAPE	ポリイミドテープ POLYIMIDE TAPE	

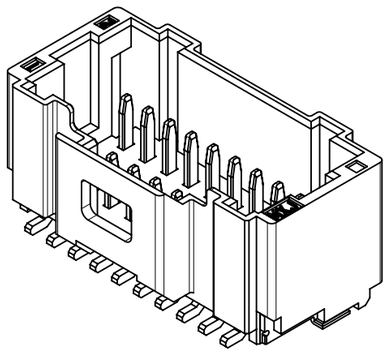

9 TABLE 2

			HOUSING COLOR NATURAL(WHITE)	
26.8	24.0	27.3	203564 5017	50
21.8	19.0	22.3	203564 4017	40
16.8	14.0	17.3	203564 3017	30
11.8	9.0	12.3	203564 2017	20
C	B	A	発注番号 ORDER No.	極数 CIRCUIT SIZE
極数別 寸法 DIMENSION			梱包形態：エンボスリール PACKAGE:EMBOSSED REEL	

THIS DRAWING CONTAINS INFORMATION THAT IS PROPRIETARY TO MOLEX ELECTRONIC TECHNOLOGIES, LLC AND SHOULD NOT BE USED WITHOUT WRITTEN PERMISSION

DIMENSION UNITS	SCALE
mm	NTS

GENERAL TOLERANCES (UNLESS SPECIFIED)

ANGULAR TOL	±	3.0 °
4 PLACES	±	0.2
3 PLACES	±	0.2
2 PLACES	±	0.2
1 PLACE	±	0.2
0 PLACES	±	0.2

DRAFT WHERE APPLICABLE MUST REMAIN WITHIN DIMENSIONS

CURRENT REV DESC:

EC NO: 615136
DRWN: AISHIKAWA 2019/09/06
CHK'D: AIDA 2019/09/11
APPR: SAKIYAMA 2019/09/17

INITIAL REVISION:
DRWN: AISHIKAWA 2019/03/29
APPR: KOMURAKAMI 2019/04/03

molex

PICO-CLASP 1.0 W/B
DUAL ROW VT SMT GOLD PLATING
0.38 MICRO-METER

PRODUCT CUSTOMER DRAWING

DOCUMENT NUMBER	DOC TYPE	DOC PART	REVISION
2035640000-SD	PSD	000	B

THIRD ANGLE PROJECTION	DRAWING	SERIES	MATERIAL NUMBER	CUSTOMER	SHEET NUMBER
	A3-SIZE	203564	SEE SHEET 5		1 OF 4

DOCUMENT STATUS	P1	RELEASE DATE	2019/09/17 08:20:57

FORMAT: tb-prod-A3
REVISION: H
DATE: 2018/01/18

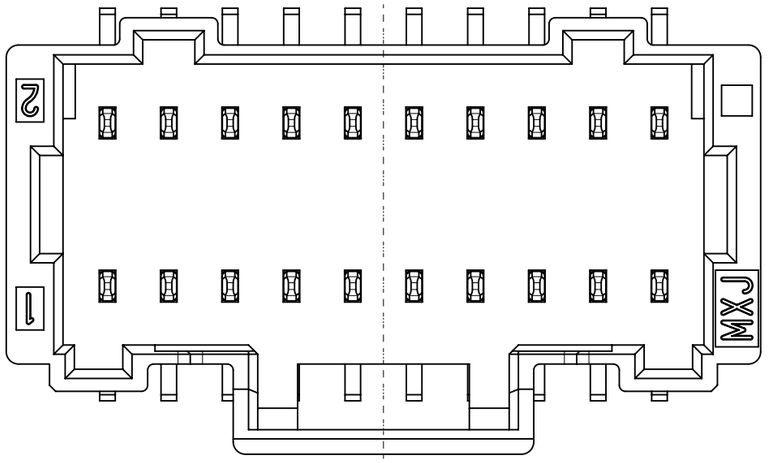

製品レイアウト
PRODUCT LAYOUT

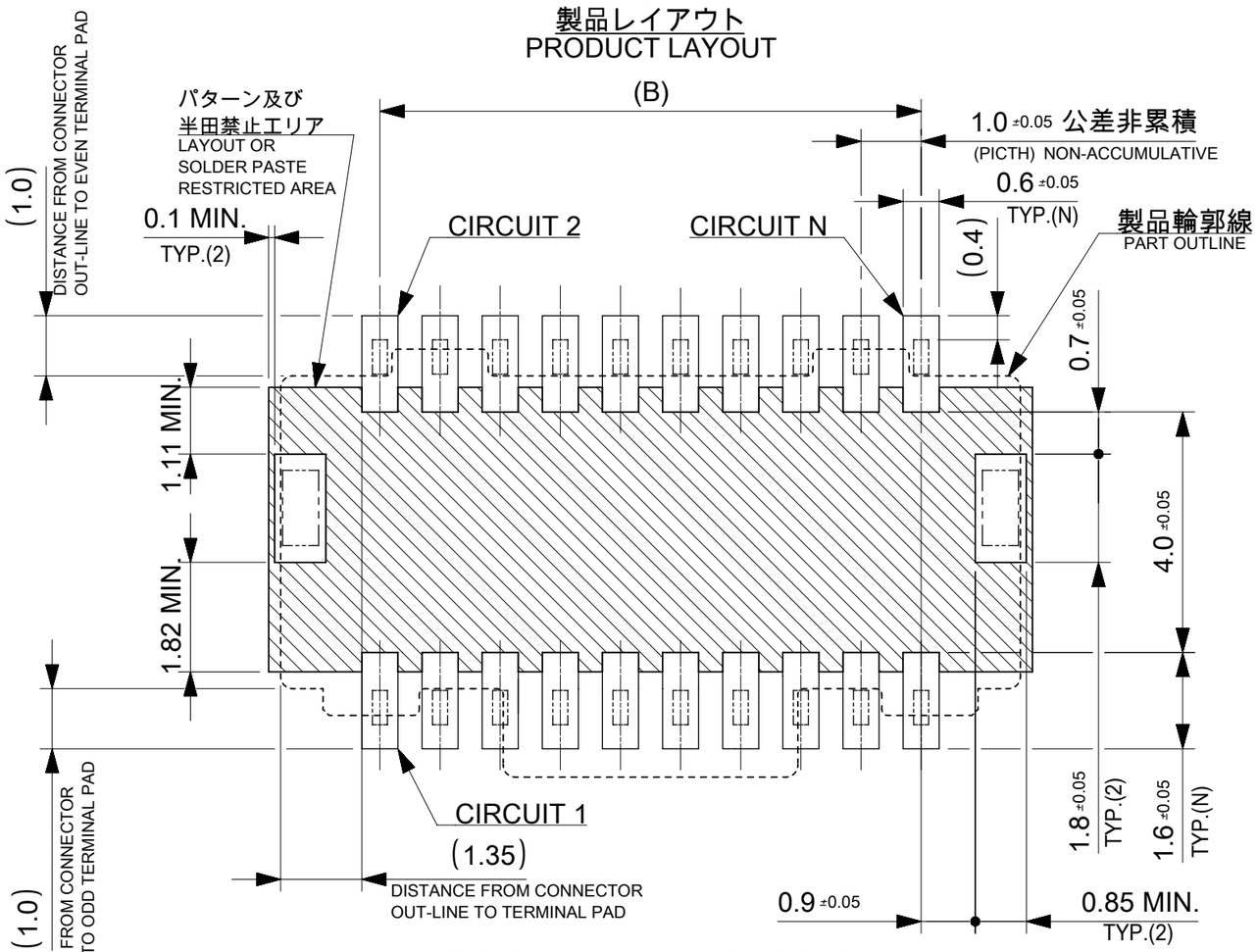

推奨基板レイアウト(全極数適応)：実装面側
(参考：基板厚 1.0mm, メタルマスク厚さ 0.12mm, マスク開口率100%)

POLARIZED RECOMMENDED PCB LAYOUT(APPLY TO ALL CIRCUIT) : COMPONENT SIDE
(REFERENCE: PCB THICKNESS 1.0mm, STENCIL THICKNESS 0.12mm, APERTURE RATIO 100%)

:パターン禁止エリア
RESTRICTED AREA
NO PCB COMPONENTS ALLOWED

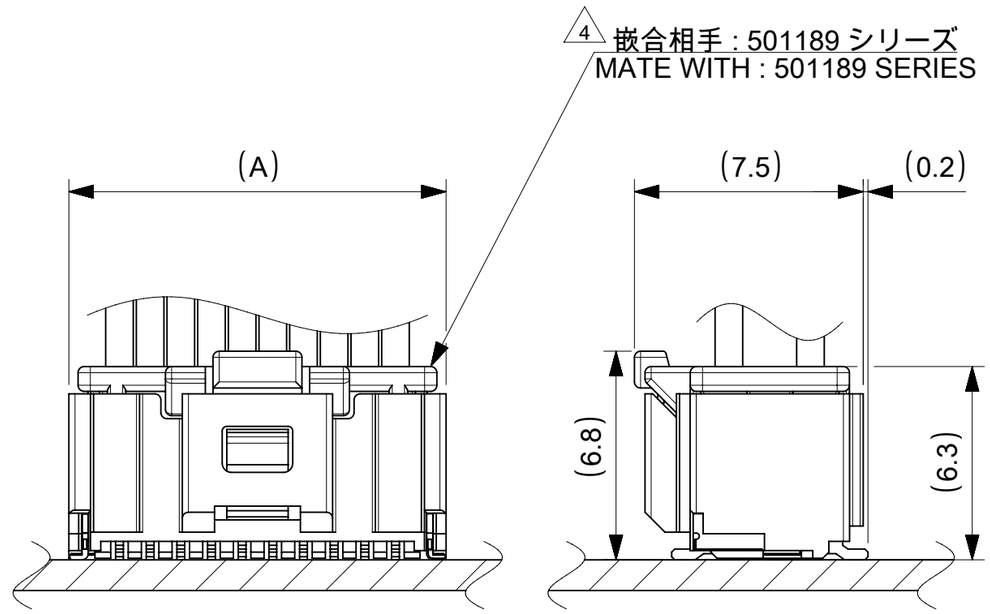

嵌合図
MATED CONNECTORS

THIS DRAWING CONTAINS INFORMATION THAT IS PROPRIETARY TO MOLEX ELECTRONIC TECHNOLOGIES, LLC AND SHOULD NOT BE USED WITHOUT WRITTEN PERMISSION

DIMENSION UNITS	SCALE
mm	NTS

GENERAL TOLERANCES (UNLESS SPECIFIED)

ANGULAR TOL	±	3.0 °
4 PLACES	±	0.2
3 PLACES	±	0.2
2 PLACES	±	0.2
1 PLACE	±	0.2
0 PLACES	±	0.2

DRAFT WHERE APPLICABLE MUST REMAIN WITHIN DIMENSIONS

CURRENT REV DESC:

EC NO: 615136
DRWN: AISHIKAWA 2019/09/06
CHK'D: AIDA 2019/09/11
APPR: SAKIYAMA 2019/09/17

INITIAL REVISION:
DRWN: AISHIKAWA 2019/03/29
APPR: KOMURAKAMI 2019/04/03

THIRD ANGLE PROJECTION | DRAWING: A3-SIZE | SERIES: 203564

molex

PICO-CLASP 1.0 W/B
DUAL ROW VT SMT GOLD PLATING
0.38 MICRO-METER

PRODUCT CUSTOMER DRAWING

DOCUMENT NUMBER	DOC TYPE	DOC PART	REVISION
2035640000-SD	PSD	000	B

MATERIAL NUMBER	CUSTOMER	SHEET NUMBER
SEE SHEET 5		2 OF 4

DOCUMENT STATUS	P1	RELEASE DATE	2019/09/17 08:20:57

FORMAT: master-tb-prod-A3
REVISION: H
DATE: 2018/01/18

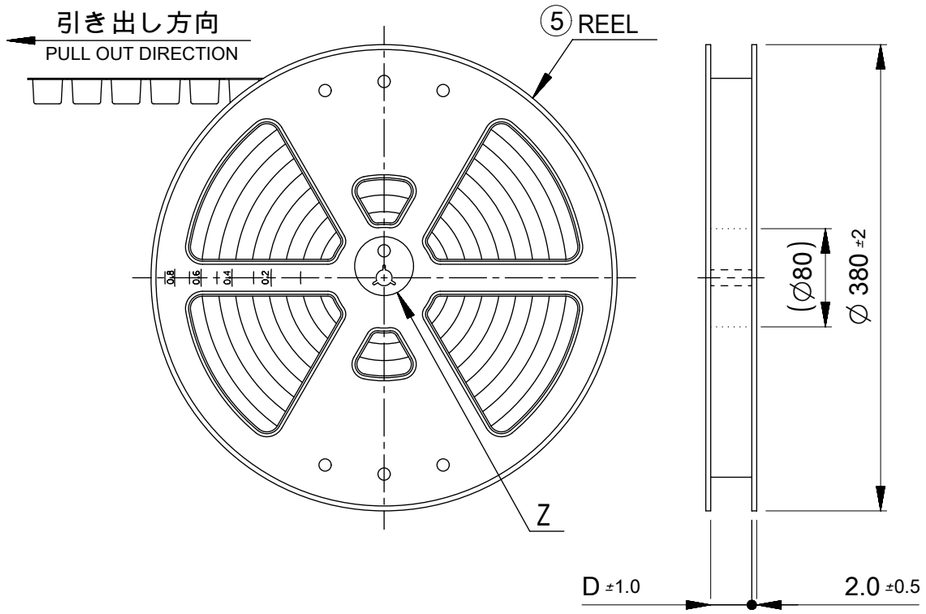

NOTES

10. 梱包数量:1100個/リール
    NUMBER OF CONNECTORS : 1100 PIECES/REEL
11. リードテープ長さ
    LEAD TAPE LENGTH

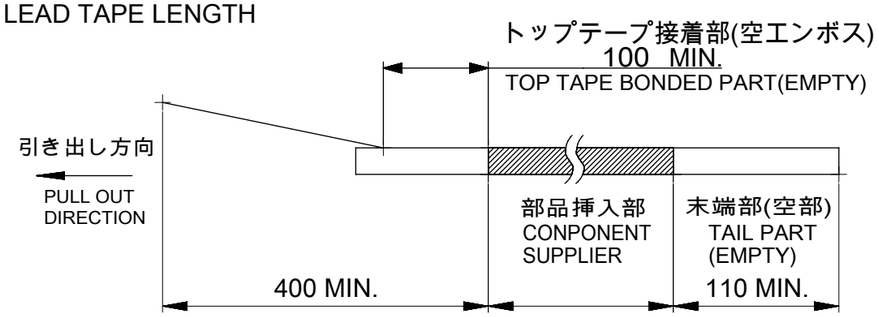

12. トップテープの剥離強度はIEC60286-3に準拠。
    TOP TAPE PEELING FORCE IS DEFINED BY IEC60286-3.
13. 梱包仕様書：2035649200 PS 200
    PACKAGE SPECIFICATION:

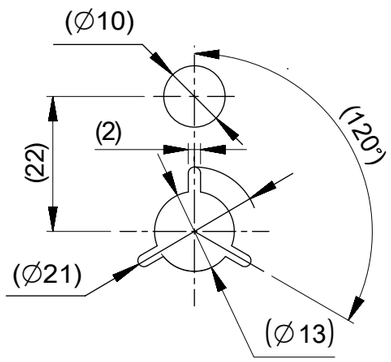

DETAIL Z

45.5	50
	40
33.5	30
25.5	20
D	極数 CIRCUIT SIZE

番号 NO.	部品 PART	材質 MATERIAL
⑤	リール REEL	ポリスチレン(PS) <リサイクル材を含む> POLYSTYRENE(PS) <RECYCLE MATERIAL CONTAINED>

DOCUMENT STATUS	P1	RELEASE DATE	2019/09/17 08:20:57

THIS DRAWING CONTAINS INFORMATION THAT IS PROPRIETARY TO MOLEX ELECTRONIC TECHNOLOGIES, LLC AND SHOULD NOT BE USED WITHOUT WRITTEN PERMISSION

DIMENSION UNITS	SCALE
mm	NTS

GENERAL TOLERANCES (UNLESS SPECIFIED)

ANGULAR TOL	±	3.0 °
4 PLACES	±	0.2
3 PLACES	±	0.2
2 PLACES	±	0.2
1 PLACE	±	0.2
0 PLACES	±	0.2

DRAFT WHERE APPLICABLE MUST REMAIN WITHIN DIMENSIONS

CURRENT REV DESC:

EC NO: 615136
DRWN: AISHIKAWA 2019/09/06
CHK'D: AIDA 2019/09/11
APPR: SAKIYAMA 2019/09/17

INITIAL REVISION:
DRWN: AISHIKAWA 2019/03/29
APPR: KOMURAKAMI 2019/04/03

THIRD ANGLE PROJECTION | DRAWING: A3-SIZE | SERIES: 203564

molex

PICO-CLASP 1.0 W/B
DUAL ROW VT SMT GOLD PLATING
0.38 MICRO-METER

PRODUCT CUSTOMER DRAWING

DOCUMENT NUMBER	DOC TYPE	DOC PART	REVISION
2035640000-SD	PSD	000	B

MATERIAL NUMBER	CUSTOMER	SHEET NUMBER
SEE SHEET 5		3 OF 4

FORMAT: master-tb-prod-A3
REVISION: H
DATE: 2018/01/18

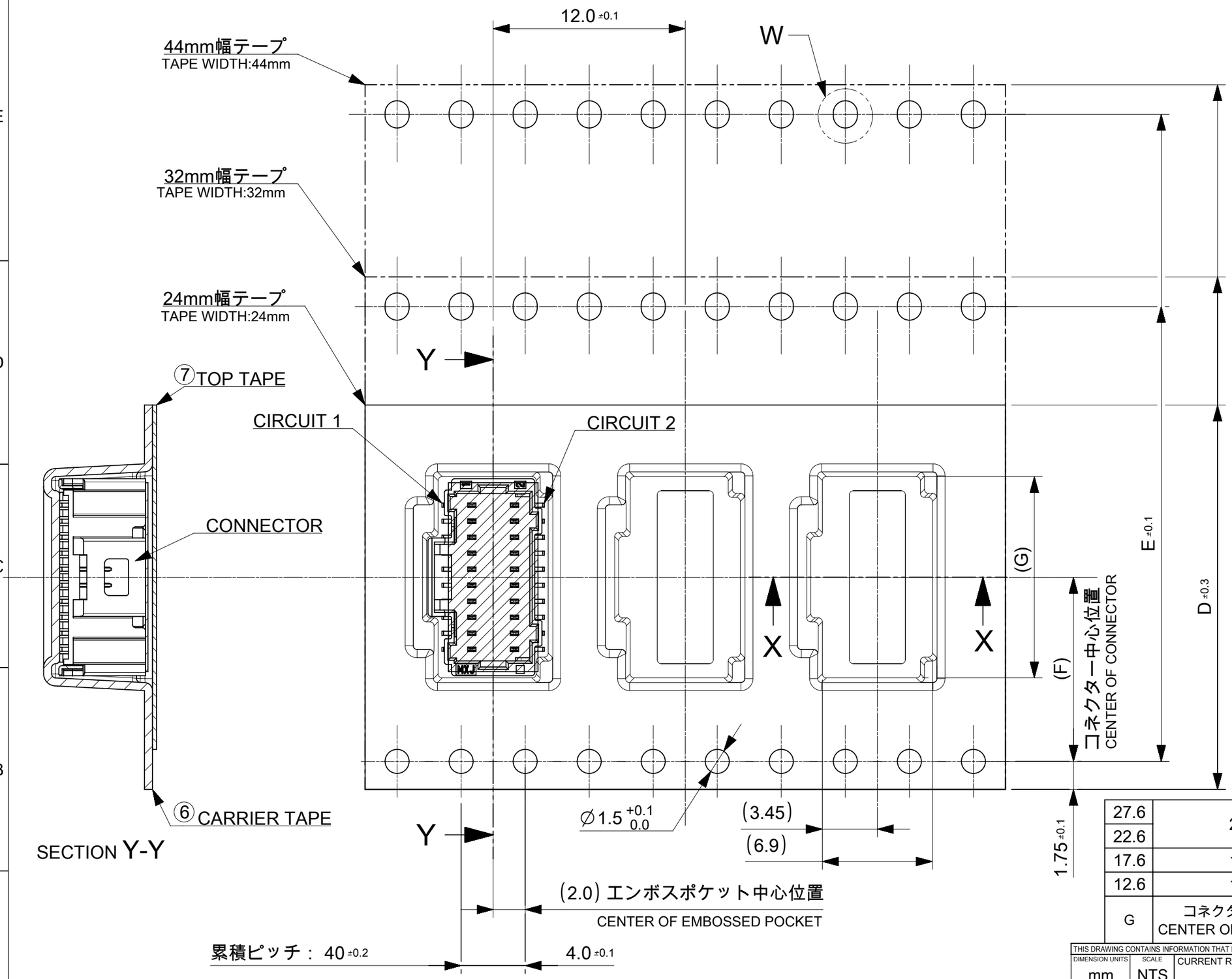

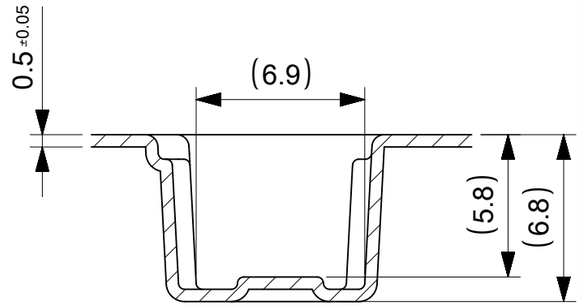

SECTION X-X

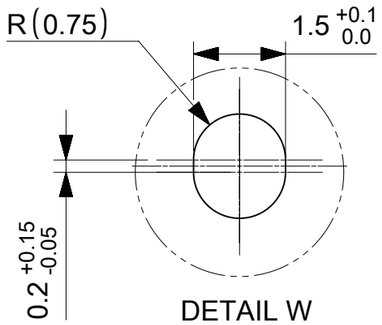

DETAIL W

27.6	20.2	40.4	44.0	50
22.6				40
17.6	14.2	28.4	32.0	30
12.6	11.5	-	24.0	20
G	コネクタ中心位置 F CENTER OF CONNECTOR	E	エンボステープ幅 D WIDTH OF TAPE	極数 CIRCUIT SIZE

番号 NO.	部品 PART	材質 MATERIAL
⑥	キャリアテープ CARRIER TAPE	ポリプロピレン(PP)、その他 POLYPROPYLEN(PP), etc
⑦	トップテープ TOP TAPE	ポリエチレン(PE)、その他 POLYETHYLENE(PE), etc

DOCUMENT STATUS	P1	RELEASE DATE	2019/09/17 08:20:57

THIS DRAWING CONTAINS INFORMATION THAT IS PROPRIETARY TO MOLEX ELECTRONIC TECHNOLOGIES, LLC AND SHOULD NOT BE USED WITHOUT WRITTEN PERMISSION

DIMENSION UNITS	SCALE
mm	NTS

GENERAL TOLERANCES (UNLESS SPECIFIED)

ANGULAR TOL	±	3.0 °
4 PLACES	±	0.2
3 PLACES	±	0.2
2 PLACES	±	0.2
1 PLACE	±	0.2
0 PLACES	±	0.2

DRAFT WHERE APPLICABLE MUST REMAIN WITHIN DIMENSIONS

CURRENT REV DESC:

EC NO: 615136
DRWN: AISHIKAWA 2019/09/06
CHK'D: AIDA 2019/09/11
APPR: SAKIYAMA 2019/09/17

INITIAL REVISION:
DRWN: AISHIKAWA 2019/03/29
APPR: KOMURAKAMI 2019/04/03

THIRD ANGLE PROJECTION | DRAWING: A3-SIZE | SERIES: 203564

molex

PICO-CLASP 1.0 W/B
DUAL ROW VT SMT GOLD PLATING
0.38 MICRO-METER

PRODUCT CUSTOMER DRAWING

DOCUMENT NUMBER	DOC TYPE	DOC PART	REVISION
2035640000-SD	PSD	000	B

MATERIAL NUMBER	CUSTOMER	SHEET NUMBER
SEE SHEET 5		4 OF 4

FORMAT: master-tb-prod-A3
REVISION: H
DATE: 2018/01/18