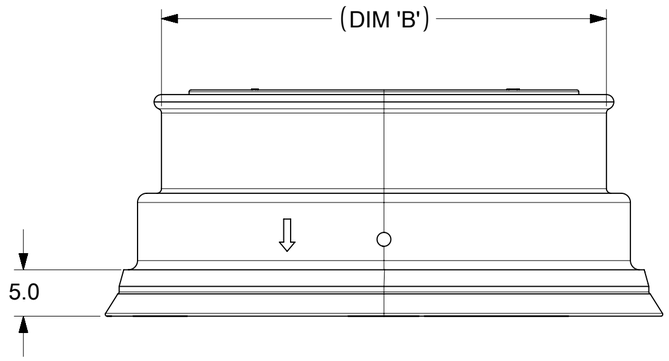

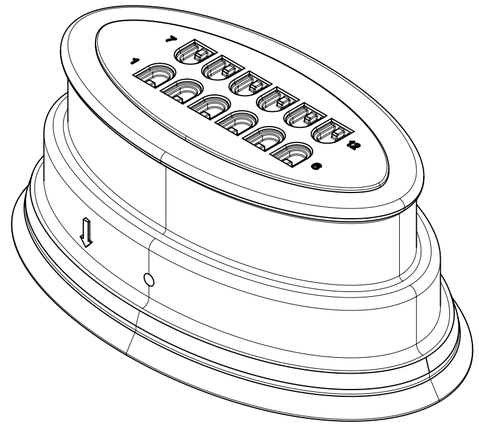

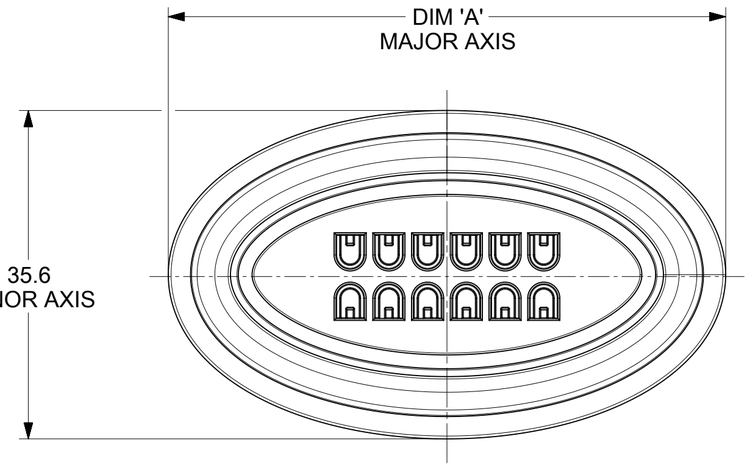

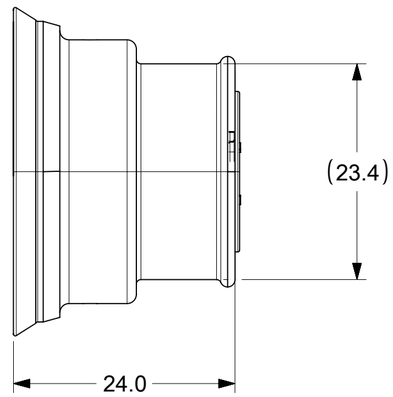

NOTE:
1. MATERIAL: THERMOPLASTIC ELASTOMER
   COLOR: BLACK
2. PRODUCT SPECIFICATION: 2070170000-PS
   APPLICATION SPECIFICATION: 2070170000-AS
3. PACKAGING SPECIFICATION: 2070180000-PK
4. THIS COVER TO BE USED WITH PLUG HSG SERIES 207017.
5. WIRES TO BE DRESSED IN SUCH A MANNER TO ALLOW TERMINALS TO FLOAT FREELY IN THE POCKET.
6. PART CONFORMS TO CLASS "B" REQUIREMENTS OF COSMETIC SPECIFICATION PS-45499-002.
7. TEXT ON PART IS FOR REFERENCE ONLY. TEXT AND TEXT LOCATION MAY VARY.

PART NUMBER	CKT	A	B
2070190018	18	73.0	60.8
2070190016	16	68.8	56.6
2070190014	14	64.6	52.4
2070190012	12	60.4	48.2
2070190010	10	56.2	44.0
2070190008	8	52.0	39.8
2070190006	6	47.8	35.6
2070190004	4	43.6	31.4

THIS DRAWING CONTAINS INFORMATION THAT IS PROPRIETARY TO MOLEX ELECTRONIC TECHNOLOGIES, LLC AND SHOULD NOT BE USED WITHOUT WRITTEN PERMISSION

DIMENSION UNITS	mm
SCALE	2:1
GENERAL TOLERANCES (UNLESS SPECIFIED)	
ANGULAR TOL	± 0.5 °
4 PLACES	±
3 PLACES	±
2 PLACES	± 0.25
1 PLACE	± 0.35
0 PLACES	±
DRAFT WHERE APPLICABLE MUST REMAIN WITHIN DIMENSIONS	

CURRENT REV DESC: 2D UPDATED

EC NO: 629453
DRWN: GGUNAGI 2019/12/19
CHK'D: NCSR 2020/01/09
APPR: NCSR 2020/01/09

INITIAL REVISION:
DRWN: GGUNAGI 2019/07/03
APPR: NCSR 2019/09/18

THIRD ANGLE PROJECTION | DRAWING: C-SIZE | SERIES: 207019

molex

MINI-FIT SIGMA SEALED CAP

PRODUCT CUSTOMER DRAWING

DOCUMENT NUMBER	DOC TYPE	DOC PART	REVISION
2070190000-SD	PSD	000	B

MATERIAL NUMBER	CUSTOMER	SHEET NUMBER
SEE TABLE	GENERAL MARKET	1 OF 2

DOCUMENT STATUS	P1	RELEASE DATE	2020/01/09 19:00:10

FORMAT: master-tb-prod-C
REVISION: H
DATE: 2018/01/18

4 CKT

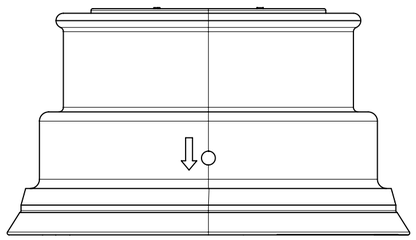

6 CKT

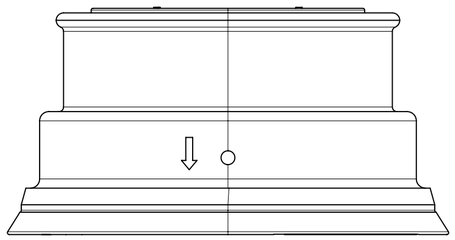

8 CKT

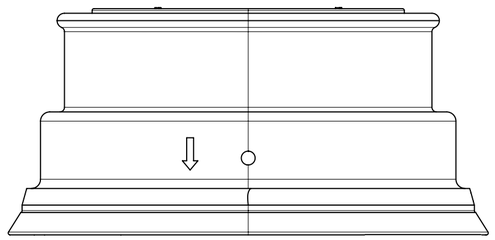

10 CKT

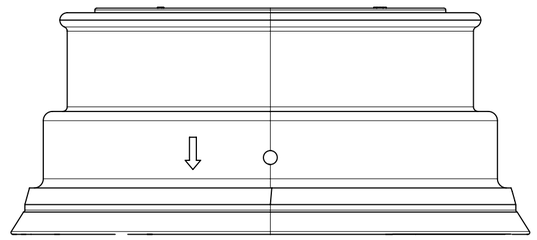

12 CKT

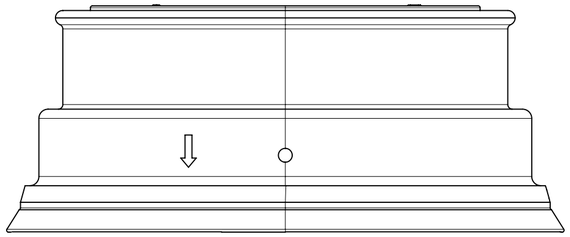

14 CKT

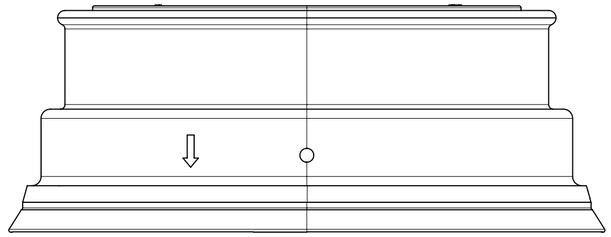

16 CKT

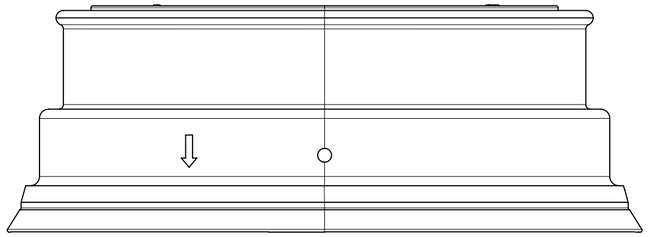

18 CKT

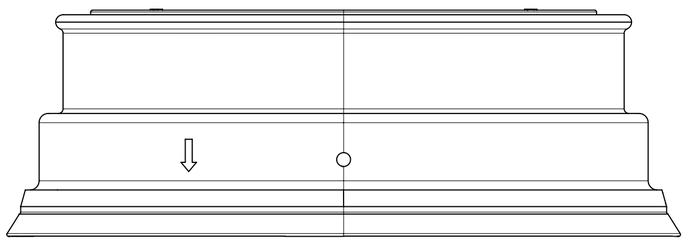

THIS DRAWING CONTAINS INFORMATION THAT IS PROPRIETARY TO MOLEX ELECTRONIC TECHNOLOGIES, LLC AND SHOULD NOT BE USED WITHOUT WRITTEN PERMISSION

DIMENSION UNITS	SCALE
mm	2:1

GENERAL TOLERANCES (UNLESS SPECIFIED)

ANGULAR TOL	±	0.5 °
4 PLACES	±	
3 PLACES	±	
2 PLACES	±	0.25
1 PLACE	±	0.35
0 PLACES	±	

DRAFT WHERE APPLICABLE MUST REMAIN WITHIN DIMENSIONS

CURRENT REV DESC: 2D UPDATED

EC NO: 629453

DRWN:	GGUNAGI	2019/12/19
CHK'D:	NCSR	2020/01/09
APPR:	NCSR	2020/01/09

INITIAL REVISION:

DRWN:	GGUNAGI	2019/07/03
APPR:	NCSR	2019/09/18

THIRD ANGLE PROJECTION

DRAWING	SERIES
C-SIZE	207019

molex

MINI-FIT SIGMA SEALED CAP

PRODUCT CUSTOMER DRAWING

DOCUMENT NUMBER	DOC TYPE	DOC PART	REVISION
2070190000-SD	PSD	000	B

MATERIAL NUMBER	CUSTOMER	SHEET NUMBER
SEE TABLE	GENERAL MARKET	2 OF 2

DOCUMENT STATUS	P1	RELEASE DATE	2020/01/09 19:00:10

FORMAT: master-tb-prod-C
REVISION: H
DATE: 2018/01/18