Not recommended for new designs – Please use 93LC76C or 93LC86C.

93LC76/86

8K/16K 2.5V Microwire Serial EEPROM

Features:

- Single Supply with Programming Operation down to 2.5V
- Low-Power CMOS Technology
  - 1 mA active current typical
  - 5 μA standby current (typical) at 3.0V
- ORG Pin Selectable Memory Configuration
  1024 x 8 or 512 x 16-Bit Organization (93LC76)
  2048 x 8 or 1024 x 16-Bit Organization (93LC86)
- Self-Timed Erase and Write Cycles (including auto-erase)
- Automatic ERAL before WRAL
- Power On/Off Data Protection Circuitry
- Industry Standard 3-Wire Serial I/O
- Device Status Signal during Erase/Write Cycles
- Sequential Read Function
- 1,000,000 Erase/Write Cycles Ensured
- Data Retention > 200 years
- 8-Pin PDIP/SOIC Package
- Temperature Ranges Available
  - Commercial (C) 0°C to +70°C
  - Industrial (I) -40°C to +85°C

Description:

The Microchip Technology Inc. 93LC76/86 are 8K and 16K low voltage serial Electrically Erasable PROMs. The device memory is configured as x8 or x16 bits depending on the ORG pin setup. Advanced CMOS technology makes these devices ideal for low power nonvolatile memory applications. These devices also have a Program Enable (PE) pin to allow the user to write-protect the entire contents of the memory array. The 93LC76/86 is available in standard 8-pin PDIP and 8-pin surface mount SOIC packages.

Package Types

PDIP Package

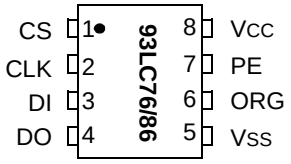

SOIC Package

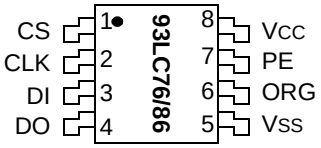

Block Diagram

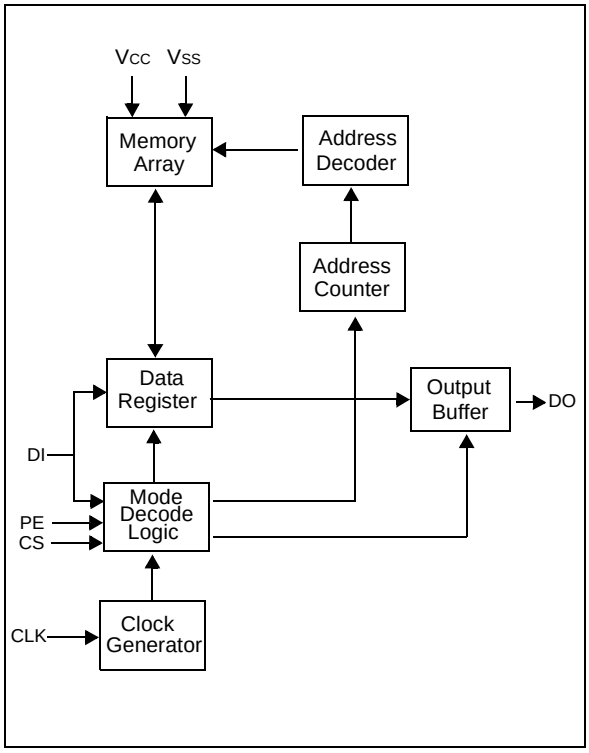

© 2010 Microchip Technology Inc.

1.0 ELECTRICAL CHARACTERISTICS

Absolute Maximum Ratings(†)

V_{CC}.....7.0V

All inputs and outputs w.r.t. V_{SS} .....-0.6V to Vcc + 1.0V

Storage temperature .....-65°C to +150°C

Ambient temperature with power applied.....-40°C to +125°C

Soldering temperature of leads (10 seconds) .....+300°C

ESD protection on all pins.....4 kV

† NOTICE: Stresses above those listed under “Absolute Maximum Ratings” may cause permanent damage to the device. This is a stress rating only and functional operation of the device at these or any other conditions above those indicated in the operational listings of this specification is not implied. Exposure to Absolute Maximum Rating conditions for extended periods may affect device reliability.

1.1 AC Test Conditions

AC Waveform:

V_{LO} = 2.0V

V_{HI} = Vcc - 0.2V **(Note 1)**

V_{HI} = 4.0V for **(Note 2)**

Timing Measurement Reference Level

Input	0.5 V_{CC}
Output	0.5 V_{CC}

Note 1: For $V_{CC} \leq 4.0V$

2: For $V_{CC} > 4.0V$

© 2010 Microchip Technology Inc.

TABLE 1-1: DC CHARACTERISTICS

DC CHARACTERISTICS	Applicable over recommended operating ranges shown below unless otherwise noted: V_{CC} = +2.5V to +6.0V Commercial (C): T_A = 0°C to +70°C Industrial (I): T_A = -40°C to +85°C				
Parameter	**Symbol**	**Min.**	**Max.**	**Units**	**Conditions**
High-level input voltage	V_{IH1}	2.0	V_{CC} + 1	V	$V_{CC} \geq 2.7V$
	V_{IH2}	0.7 V_{CC}	V_{CC} + 1	V	$V_{CC} < 2.7V$
Low-level input voltage	V_{IL1}	-0.3	0.8	V	$V_{CC} \geq 2.7V$
	V_{IL2}	-0.3	0.2 V_{CC}	V	$V_{CC} < 2.7V$
Low-level output voltage	V_{OL1}	—	0.4	V	I_{OL} = 2.1 mA; V_{CC} = 4.5V
	V_{OL2}	—	0.2	V	I_{OL} =100 μA; V_{CC} = V_{CC} Min.
High-level output voltage	V_{OH1}	2.4	—	V	I_{OH} = -400 μA; V_{CC} = 4.5V
	V_{OH2}	V_{CC}-0.2	—	V	I_{OH} = -100 μA; V_{CC} = V_{CC} Min.
Input leakage current	I_{LI}	-10	10	μA	V_{IN} = 0.1V to V_{CC}
Output leakage current	I_{LO}	-10	10	μA	V_{OUT} = 0.1V to V_{CC}
Pin capacitance (all inputs/outputs)	C_{INT}	—	7	pF	**(Note 1)** T_A = +25°C, F_{CLK} = 1 MHz
Operating current	I_{CC} write	—	3	mA	V_{CC} = 5.5V
	I_{CC} read	—	1 500	mA μA	F_{CLK} = 3 MHz; V_{CC} = 5.5V F_{CLK} = 1 MHz; V_{CC} = 3.0V
Standby current	I_{CCS}	—	100 30	μA μA	CLK = CS = 0V; V_{CC} = 5.5V CLK = CS = 0V; V_{CC} = 3.0V DI = PE = V_{SS} ORG = V_{SS} or V_{CC}

Note 1: This parameter is periodically sampled and not 100% tested.

TABLE 1-2: AC CHARACTERISTICS

AC CHARACTERISTICS	Applicable over recommended operating ranges shown below unless otherwise noted: V_{CC} = +2.5V to +6.0V Commercial (C): T_A = 0°C to +70°C Industrial (I): T_A = -40°C to +85°C				
Parameter	**Symbol**	**Min.**	**Max.**	**Units**	**Conditions**
Clock frequency	F_{CLK}	—	3 2	MHz MHz	4.5V ≤ V_{CC} ≤ 6.0V 2.5V ≤ V_{CC} < 4.5V
Clock high time	T_{CKH}	200 300	—	ns ns	4.5V ≤ V_{CC} ≤ 6.0V 2.5V ≤ V_{CC} < 4.5V
Clock low time	T_{CKL}	100 200	—	ns ns	4.5V ≥ V_{CC} ≤ 6.0V 2.5V ≤ V_{CC} < 4.5V
Chip select setup time	T_{CSS}	50 100	—	ns ns	4.5V ≤ V_{CC} ≤ 6.0V, Relative to CLK 2.5V ≤ V_{CC} < 4.5V, Relative to CLK
Chip select hold time	T_{CSH}	0	—	ns	—
Chip select low time	T_{CSL}	250	—	ns	Relative to CLK
Data input setup time	T_{DIS}	50 100	—	ns ns	4.5V ≤ V_{CC} ≤ 6.0V, Relative to CLK 2.5V ≤ V_{CC} <4.5V, Relative to CLK
Data input hold time	T_{DIH}	50 100	—	ns ns	4.5V ≤ V_{CC} ≤ 6.0V, Relative to CLK 2.5V ≤ V_{CC} < 4.5V, Relative to CLK
Data output delay time	T_{PD}	—	100 250	ns ns	4.5V ≤ V_{CC} ≤ 6.0V, C_L = 100 pF 2.5V ≤ V_{CC} < 4.5V, C_L = 100 pF
Data output disable time	T_{CZ}	—	100 500	ns ns	4.5V ≤ V_{CC} ≤ 6.0V 2.5V ≤ V_{CC} < 4.5V **(Note 1)**
Status valid time	Tsv	—	200 300	ns ns	4.5V ≥ V_{CC} ≤ 6.0V, C_L = 100 pF 2.5V ≤ V_{CC} <4.5V, C_L = 100 pF
Program cycle time	T_{WC}	—	5	ms	Erase/Write mode
	T_{EC}	—	15	ms	ERAL mode
	T_{WL}	—	30	ms	WRAL mode
Endurance	—	1M	—	cycles	25°C, Vcc = 5.0V, Block mode **(Note 2)**

Note 1: This parameter is periodically sampled and not 100% tested.

2: This parameter is not tested but ensured by characterization. For endurance estimates in a specific application, please consult the Total Endurance™ Model which can be obtained from Microchip's web site at www.microchip.com.

© 2010 Microchip Technology Inc.

TABLE 1-3: INSTRUCTION SET FOR 93LC76: ORG=1 (1X16 ORGANIZATION)

Instruction	SB	Opcode	Address										Data In	Data Out	Req. CLK Cycles
READ	1	10	X	A8	A7	A6	A5	A4	A3	A2	A1	A0	—	D15 - D0	29
EWEN	1	00	1	1	X	X	X	X	X	X	X	X	—	High-Z	13
ERASE	1	11	X	A8	A7	A6	A5	A4	A3	A2	A1	A0	—	(RDY/BSY)	13
ERAL	1	00	1	0	X	X	X	X	X	X	X	X	—	(RDY/BSY)	13
WRITE	1	01	X	A8	A7	A6	A5	A4	A3	A2	A1	A0	D15 - D0	(RDY/BSY)	29
WRAL	1	00	0	1	X	X	X	X	X	X	X	X	D15 - D0	(RDY/BSY)	29
EWDS	1	00	0	0	X	X	X	X	X	X	X	X	—	High-Z	13

TABLE 1-4: INSTRUCTION SET FOR 93LC76: ORG=0 (X8 ORGANIZATION)

Instruction	SB	Opcode	Address										Data In	Data Out	Req. CLK Cycles
READ	1	10	X	A9	A8	A7	A6	A5	A4	A3	A2	A1	A0	—	D7 - D0	22
EWEN	1	00	1	1	X	X	X	X	X	X	X	X		—	High-Z	14
ERASE	1	11	X	A9	A8	A7	A6	A5	A4	A3	A2	A1	A0	—	(RDY/BSY)	14
ERAL	1	00	1	0	X	X	X	X	X	X	X	X		—	(RDY/BSY)	14
WRITE	1	01	X	A9	A8	A7	A6	A5	A4	A3	A2	A1	A0	D7 - D0	(RDY/BSY)	22
WRAL	1	00	0	1	X	X	X	X	X	X	X	X		D7 - D0	(RDY/BSY)	22
EWDS	1	00	0	0	X	X	X	X	X	X	X	X		—	High-Z	14

TABLE 1-5: INSTRUCTION SET FOR 93LC86: ORG=1 (X16 ORGANIZATION)

Instruction	SB	Opcode	Address										Data In	Data Out	Req. CLK Cycles
READ	1	10	A9	A8	A7	A6	A5	A4	A3	A2	A1	A0	—	D15 - D0	29
EWEN	1	00	1	1	X	X	X	X	X	X	X	X	—	High-Z	13
ERASE	1	11	A9	A8	A7	A6	A5	A4	A3	A2	A1	A0	—	(RDY/BSY)	13
ERAL	1	00	1	0	X	X	X	X	X	X	X	X	—	(RDY/BSY)	13
WRITE	1	01	A9	A8	A7	A6	A5	A4	A3	A2	A1	A0	D15 - D0	(RDY/BSY)	29
WRAL	1	00	0	1	X	X	X	X	X	X	X	X	D15 - D0	(RDY/BSY)	29
EWDS	1	00	0	0	X	X	X	X	X	X	X	X	—	High-Z	13

TABLE 1-6: INSTRUCTION SET FOR 93LC86: ORG=0 (X8 ORGANIZATION)

Instruction	SB	Opcode	Address											Data In	Data Out	Req. CLK Cycles
READ	1	10	A10	A9	A8	A7	A6	A5	A4	A3	A2	A1	A0	—	D7 - D0	22
EWEN	1	00	1	1	X	X	X	X	X	X	X	X		—	High-Z	14
ERASE	1	11	A10	A9	A8	A7	A6	A5	A4	A3	A2	A1	A0	—	(RDY/BSY)	14
ERAL	1	00	1	0	X	X	X	X	X	X	X	X		—	(RDY/BSY)	14
WRITE	1	01	A10	A9	A8	A7	A6	A5	A4	A3	A2	A1	A0	D7 - D0	(RDY/BSY)	22
WRAL	1	00	0	1	X	X	X	X	X	X	X	X		D7 - D0	(RDY/BSY)	22
EWDS	1	00	0	0	X	X	X	X	X	X	X	X		—	High-Z	14

2.0 PRINCIPLES OF OPERATION

When the ORG pin is connected to VCC, the x16 organization is selected. When it is connected to ground, the x8 organization is selected. Instructions, addresses and write data are clocked into the DI pin on the rising edge of the clock (CLK). The DO pin is normally held in a high-Z state except when reading data from the device, or when checking the Ready/Busy status during a programming operation. The Ready/Busy status can be verified during an erase/write operation by polling the DO pin; DO low indicates that programming is still in progress, while DO high indicates the device is ready. The DO will enter the high-impedance state on the falling edge of the CS.

2.1 Start Condition

The Start bit is detected by the device if CS and DI are both high with respect to the positive edge of CLK for the first time.

Before a Start condition is detected, CS, CLK and DI may change in any combination (except to that of a Start condition), without resulting in any device operation (Read, Write, Erase, EWEN, EWDS, ERAL and WRAL). As soon as CS is high, the device is no longer in the Standby mode.

An instruction following a Start condition will only be executed if the required amount of opcode, address and data bits for any particular instruction are clocked in.

After execution of an instruction (i.e., clock in or out of the last required address or data bit) CLK and DI become “don't care” bits until a new Start condition is detected.

2.2 DI/DO

It is possible to connect the Data In and Data Out pins together. However, with this configuration it is possible for a “bus conflict” to occur during the “dummy zero” that precedes the read operation, if A0 is a logic high level. Under such a condition the voltage level seen at Data Out is undefined and will depend upon the relative impedances of Data Out and the signal source driving A0. The higher the current sourcing capability of A0, the higher the voltage at the Data Out pin.

2.3 Erase/Write Enable and Disable (EWEN, EWDS)

The 93LC76/86 powers up in the Erase/Write Disable (EWDS) state. All programming modes must be preceded by an Erase/Write Enable (EWEN) instruction. Once the EWEN instruction is executed, programming remains enabled until an EWDS instruction is executed or VCC is removed from the device. To protect against accidental data disturb, the EWDS instruction can be used to disable all erase/write functions and should follow all programming operations. Execution of a READ instruction is independent of both the EWEN and EWDS instructions.

2.4 Data Protection

During power-up, all programming modes of operation are inhibited until VCC has reached a level greater than 1.4V. During power-down, the source data protection circuitry acts to inhibit all programming modes when VCC has fallen below 1.4V.

The EWEN and EWDS commands give additional protection against accidentally programming during normal operation.

After power-up, the device is automatically in the EWDS mode. Therefore, an EWEN instruction must be performed before any ERASE or WRITE instruction can be executed.

© 2010 Microchip Technology Inc.

3.0 DEVICE OPERATION

3.1 READ

The READ instruction outputs the serial data of the addressed memory location on the DO pin. A dummy zero bit precedes the 16-bit (x16 organization) or 8-bit (x8 organization) output string. The output data bits will toggle on the rising edge of the CLK and are stable after the specified time delay (TPD). Sequential read is possible when CS is held high and clock transitions continue. The memory Address Pointer will automatically increment and output data sequentially.

3.2 ERASE

The ERASE instruction forces all data bits of the specified address to the logical "1" state. The self-timed programming cycle is initiated on the rising edge of CLK as the last address bit (A0) is clocked in. At this point, the CLK, CS and DI inputs become "don't cares".

The DO pin indicates the Ready/$\overline{\text{Busy}}$ status of the device if the CS is high. The Ready/$\overline{\text{Busy}}$ status will be displayed on the DO pin until the next Start bit is received as long as CS is high. Bringing the CS low will place the device in Standby mode and cause the DO pin to enter the high-impedance state. DO at logical "0" indicates that programming is still in progress. DO at logical "1" indicates that the register at the specified address has been erased and the device is ready for another instruction.

The erase cycle takes 3 ms per word (typical).

3.3 WRITE

The WRITE instruction is followed by 16 bits (or by 8 bits) of data to be written into the specified address. The self-timed programming cycle is initiated on the rising edge of CLK as the last data bit (D0) is clocked in. At this point, the CLK, CS and DI inputs become "don't cares".

The DO pin indicates the Ready/$\overline{\text{Busy}}$ status of the device if the CS is high. The Ready/$\overline{\text{Busy}}$ status will be displayed on the DO pin until the next Start bit is received as long as CS is high. Bringing the CS low will place the device in Standby mode and cause the DO pin to enter the high-impedance state. DO at logical "0" indicates that programming is still in progress. DO at logical "1" indicates that the register at the specified address has been written and the device is ready for another instruction.

The write cycle takes 3 ms per word (typical).

3.4 Erase All (ERAL)

The ERAL instruction will erase the entire memory array to the logical "1" state. The ERAL cycle is identical to the erase cycle except for the different opcode. The ERAL cycle is completely self-timed and commences on the rising edge of the last address bit (A0). Note that the Least Significant 8 or 9 address bits are "don't care" bits, depending on selection of x16 or x8 mode. Clocking of the CLK pin is not necessary after the device has entered the self clocking mode. The ERAL instruction is ensured at VCC = +4.5V to +6.0V.

The DO pin indicates the Ready/$\overline{\text{Busy}}$ status of the device if the CS is high. The Ready/$\overline{\text{Busy}}$ status will be displayed on the DO pin until the next Start bit is received as long as CS is high. Bringing the CS low will place the device in Standby mode and cause the DO pin to enter the high-impedance state. DO at logical "0" indicates that programming is still in progress. DO at logical "1" indicates that the entire device has been erased and is ready for another instruction.

The ERAL cycle takes 15 ms maximum (8 ms typical).

3.5 Write All (WRAL)

The WRAL instruction will write the entire memory array with the data specified in the command. The WRAL cycle is completely self-timed and commences on the rising edge of the last address bit (A0). Note that the Least Significant 8 or 9 address bits are "don't cares", depending on selection of x16 or x8 mode. Clocking of the CLK pin is not necessary after the device has entered the self clocking mode. The WRAL command does include an automatic ERAL cycle for the device. Therefore, the WRAL instruction does not require an ERAL instruction but the chip must be in the EWEN status. The WRAL instruction is ensured at Vcc = +4.5V to +6.0V.

The DO pin indicates the Ready/$\overline{\text{Busy}}$ status of the device if the CS is high. The Ready/$\overline{\text{Busy}}$ status will be displayed on the DO pin until the next Start bit is received as long as CS is high. Bringing the CS low will place the device in Standby mode and cause the DO pin to enter the high-impedance state. DO at logical "0" indicates that programming is still in progress. DO at logical "1" indicates that the entire device has been written and is ready for another instruction.

The WRAL cycle takes 30 ms maximum (16 ms typical).

FIGURE 3-1: SYNCHRONOUS DATA TIMING

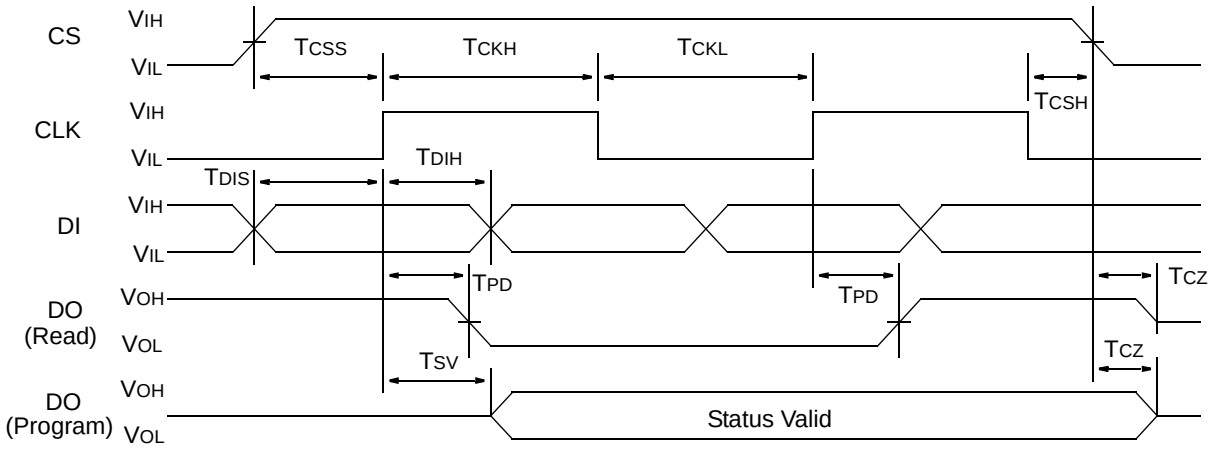

The memory automatically cycles to the next register.

FIGURE 3-2: READ

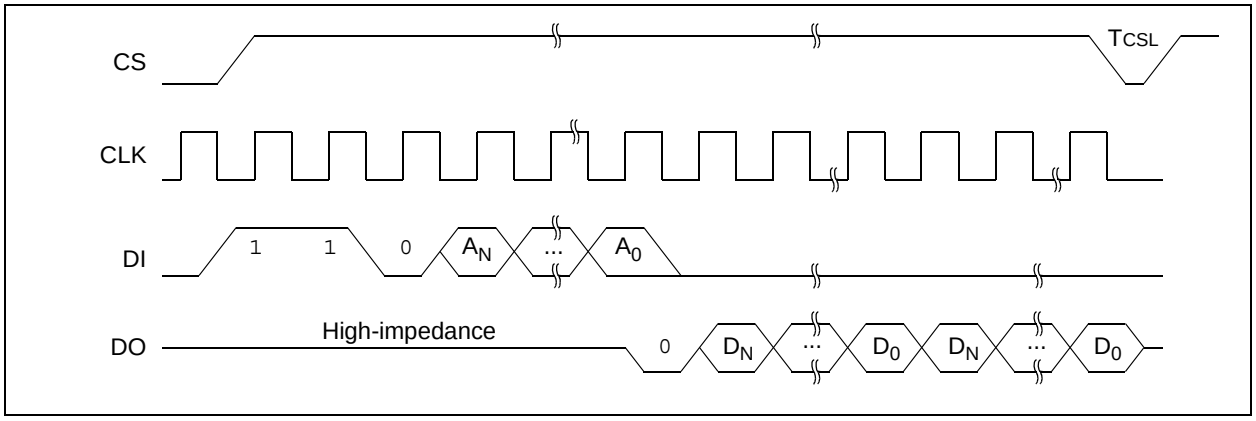

FIGURE 3-3: EWEN

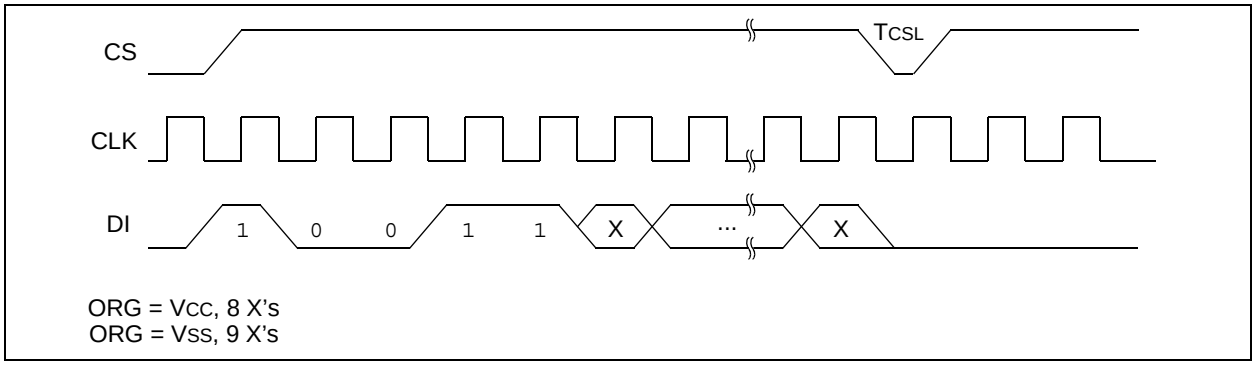

ORG = VCC, 8 X's
ORG = VSS, 9 X's

© 2010 Microchip Technology Inc.

FIGURE 3-4: EWDS

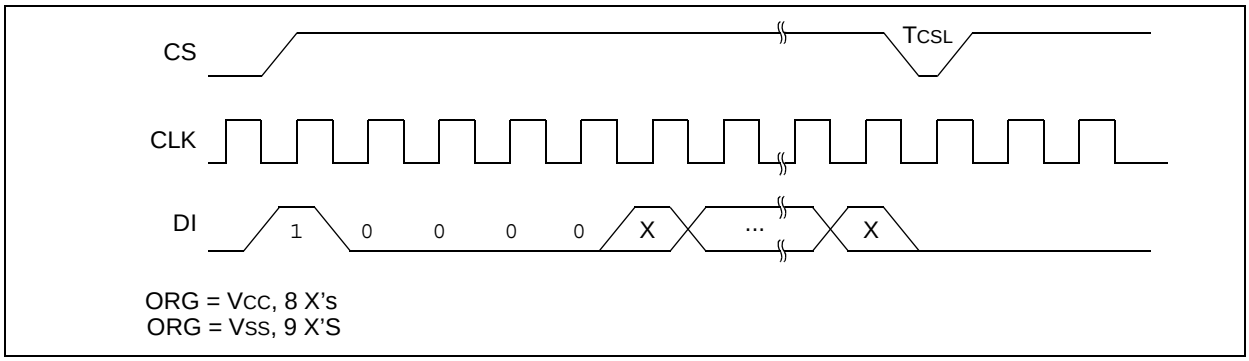

FIGURE 3-5: WRITE

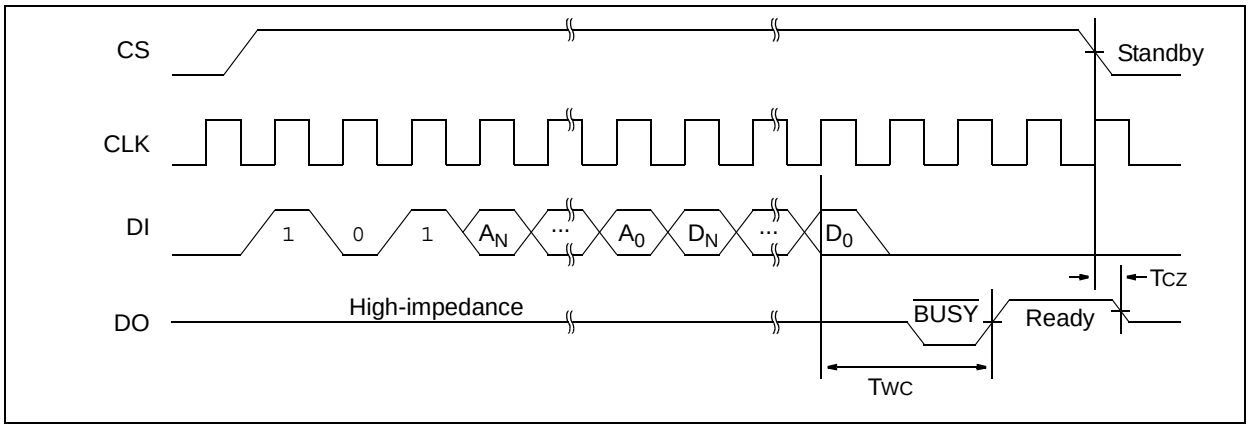

FIGURE 3-6: WRAL

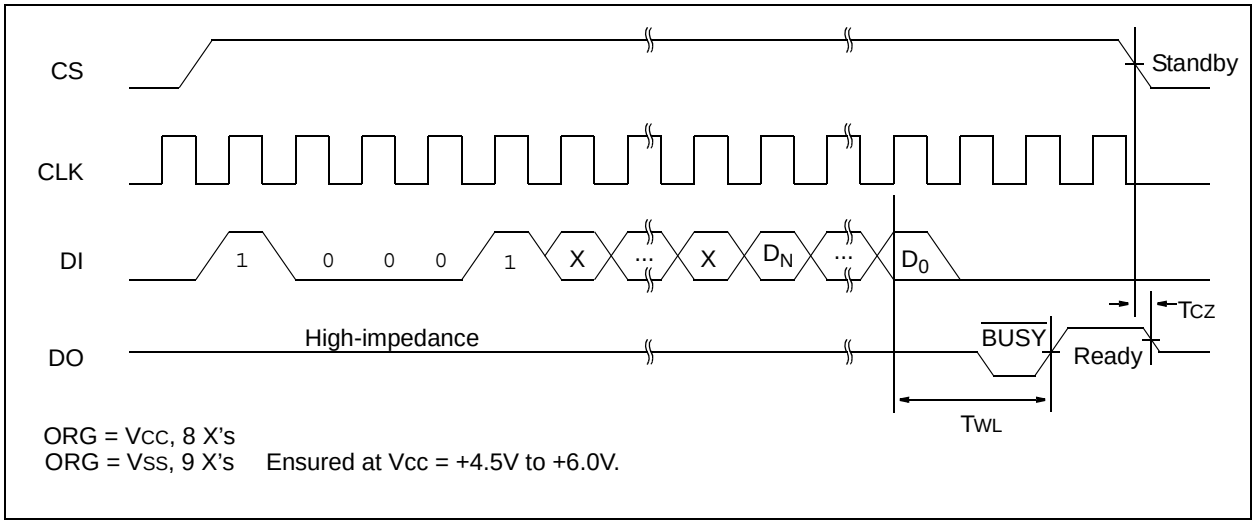

FIGURE 3-7: ERASE

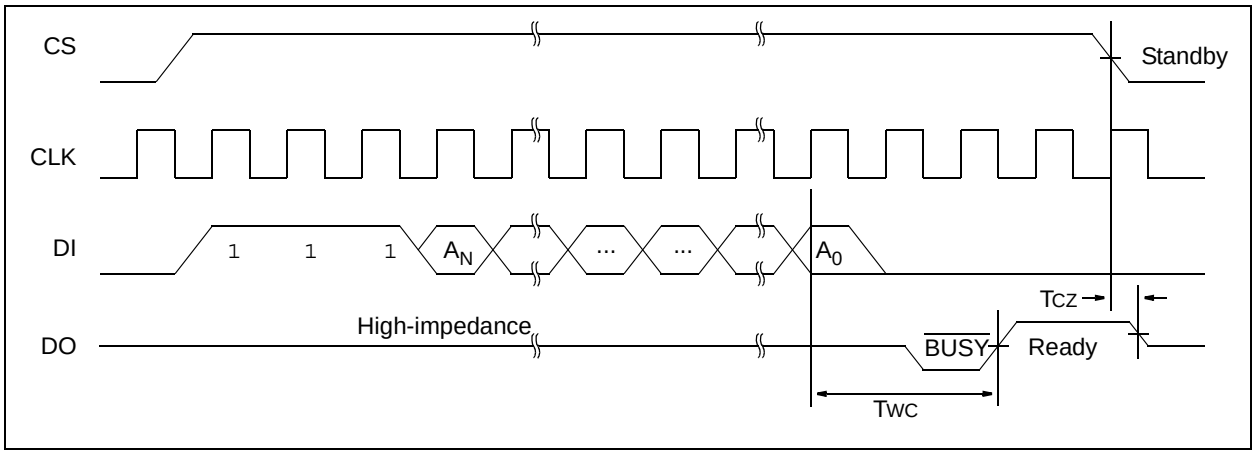

FIGURE 3-8: ERAL

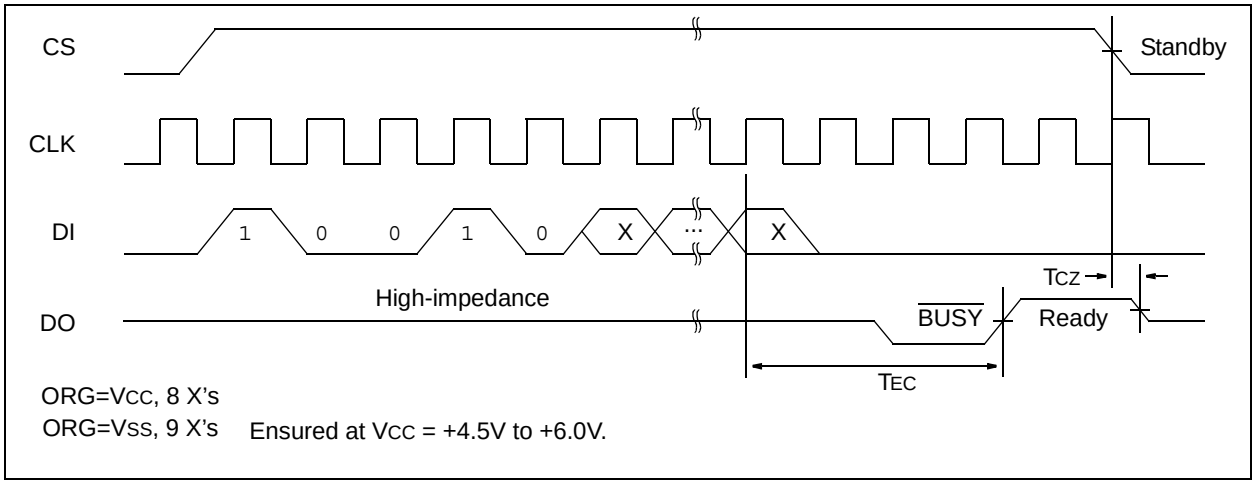

© 2010 Microchip Technology Inc.

4.0 PIN DESCRIPTIONS

TABLE 4-1: PIN FUNCTION TABLE

Name	Function
CS	Chip Select
CLK	Serial Data Clock
DI	Serial Data Input
DO	Serial Data Output
VSS	Ground
ORG	Memory Configuration
PE	Program Enable
VCC	Power Supply

4.1 Chip Select (CS)

A high level selects the device. A low level deselects the device and forces it into Standby mode. However, a programming cycle which is already initiated will be completed, regardless of the CS input signal. If CS is brought low during a program cycle, the device will go into Standby mode as soon as the programming cycle is completed.

CS must be low for 250 ns minimum (TCSL) between consecutive instructions. If CS is low, the internal control logic is held in a Reset status.

4.2 Serial Clock (CLK)

The Serial Clock is used to synchronize the communication between a master device and the 93LC76/86. Opcode, address and data bits are clocked in on the positive edge of CLK. Data bits are also clocked out on the positive edge of CLK.

CLK can be stopped anywhere in the transmission sequence (at high or low level) and can be continued anytime with respect to clock high time (TCKH) and clock low time (TCKL). This gives the controlling master freedom in preparing opcode, address and data.

CLK is a “don't care” if CS is low (device deselected). If CS is high, but Start condition has not been detected, any number of clock cycles can be received by the device without changing its status (i.e., waiting for Start condition).

CLK cycles are not required during the self-timed WRITE (i.e., auto erase/write) cycle.

After detection of a Start condition the specified number of clock cycles (respectively low-to-high transitions of CLK) must be provided. These clock cycles are required to clock in all opcode, address, and data bits before an instruction is executed (see Table 1-3 through Table 1-6 for more details). CLK and DI then become “don't care” inputs waiting for a new Start condition to be detected.

Note:	CS must go low between consecutive instructions, except when performing a sequential read (Refer to **Section 3.1 “READ”** for more detail on sequential reads).

4.3 Data In (DI)

Data In is used to clock in a Start bit, opcode, address and data synchronously with the CLK input.

4.4 Data Out (DO)

Data Out is used in the Read mode to output data synchronously with the CLK input (TPD after the positive edge of CLK).

This pin also provides Ready/$\overline{\text{Busy}}$ status information during erase and write cycles. Ready/$\overline{\text{Busy}}$ status information is available when CS is high. It will be displayed until the next Start bit occurs as long as CS stays high.

4.5 Organization (ORG)

When ORG is connected to VCC, the x16 memory organization is selected. When ORG is tied to VSS, the x8 memory organization is selected. There is an internal pull-up resistor on the ORG pin that will select x16 organization when left unconnected.

4.6 Program Enable (PE)

This pin allows the user to enable or disable the ability to write data to the memory array. If the PE pin is floated or tied to VCC, the device can be programmed. If the PE pin is tied to VSS, programming will be inhibited. There is an internal pull-up on this device that enables programming if this pin is left floating.

5.0 PACKAGING INFORMATION

5.1 Package Marking Information

8-Lead PDIP



Example

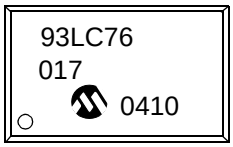

8-Lead SOIC (.150”)



Example

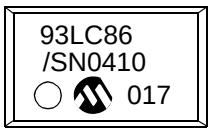

© 2010 Microchip Technology Inc.

8-Lead Plastic Dual In-Line (P) – 300 mil Body [PDIP]

Note: For the most current package drawings, please see the Microchip Packaging Specification located at http://www.microchip.com/packaging

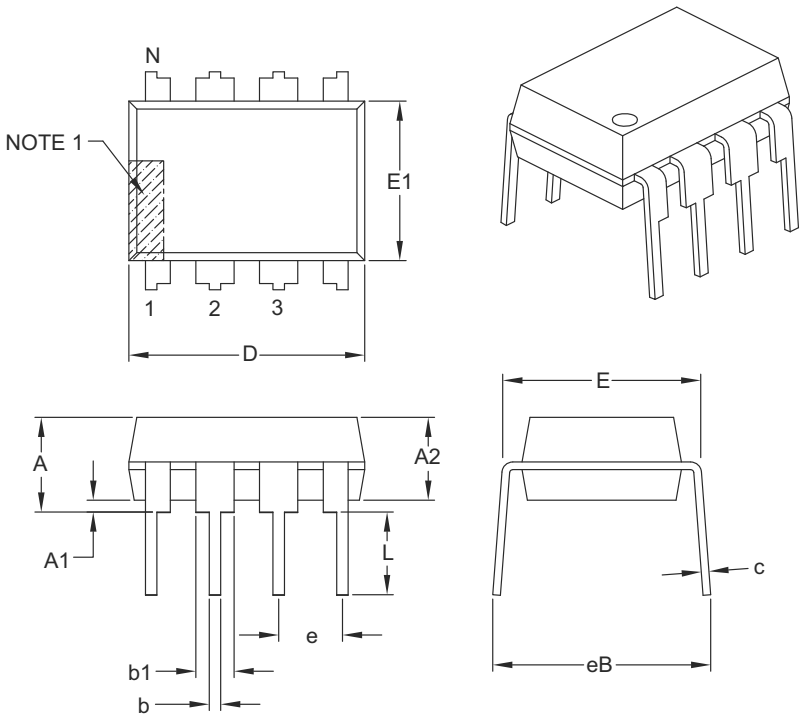

Units		INCHES		
Dimension Limits		MIN	NOM	MAX
Number of Pins	N		8	
Pitch	e		.100 BSC	
Top to Seating Plane	A	–	–	.210
Molded Package Thickness	A2	.115	.130	.195
Base to Seating Plane	A1	.015	–	–
Shoulder to Shoulder Width	E	.290	.310	.325
Molded Package Width	E1	.240	.250	.280
Overall Length	D	.348	.365	.400
Tip to Seating Plane	L	.115	.130	.150
Lead Thickness	c	.008	.010	.015
Upper Lead Width	b1	.040	.060	.070
Lower Lead Width	b	.014	.018	.022
Overall Row Spacing §	eB	–	–	.430

Notes:

1. Pin 1 visual index feature may vary, but must be located with the hatched area.
2. § Significant Characteristic.
3. Dimensions D and E1 do not include mold flash or protrusions. Mold flash or protrusions shall not exceed .010" per side.
4. Dimensioning and tolerancing per ASME Y14.5M.

   BSC: Basic Dimension. Theoretically exact value shown without tolerances.

Microchip Technology Drawing C04-018B

8-Lead Plastic Small Outline (SN) – Narrow, 3.90 mm Body [SOIC]

Note: For the most current package drawings, please see the Microchip Packaging Specification located at http://www.microchip.com/packaging

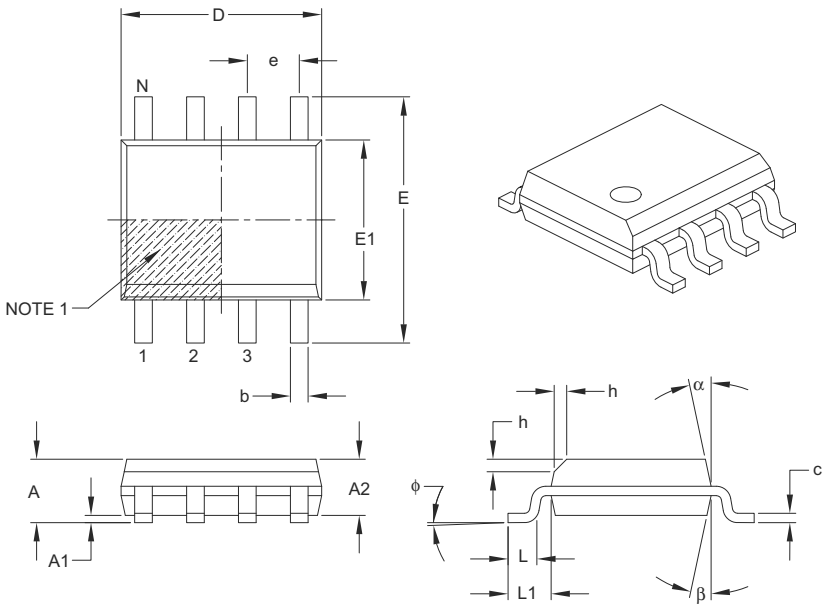

Units		MILLIMETERS		
Dimension Limits		MIN	NOM	MAX
Number of Pins	N		8	
Pitch	e		1.27 BSC	
Overall Height	A	–	–	1.75
Molded Package Thickness	A2	1.25	–	–
Standoff §	A1	0.10	–	0.25
Overall Width	E		6.00 BSC	
Molded Package Width	E1		3.90 BSC	
Overall Length	D		4.90 BSC	
Chamfer (optional)	h	0.25	–	0.50
Foot Length	L	0.40	–	1.27
Footprint	L1		1.04 REF	
Foot Angle	φ	0°	–	8°
Lead Thickness	c	0.17	–	0.25
Lead Width	b	0.31	–	0.51
Mold Draft Angle Top	α	5°	–	15°
Mold Draft Angle Bottom	β	5°	–	15°

Notes:

1. Pin 1 visual index feature may vary, but must be located within the hatched area.
2. § Significant Characteristic.
3. Dimensions D and E1 do not include mold flash or protrusions. Mold flash or protrusions shall not exceed 0.15 mm per side.
4. Dimensioning and tolerancing per ASME Y14.5M.

   BSC: Basic Dimension. Theoretically exact value shown without tolerances.

   REF: Reference Dimension, usually without tolerance, for information purposes only.

Microchip Technology Drawing C04-057B

© 2010 Microchip Technology Inc.

8-Lead Plastic Small Outline (SN) – Narrow, 3.90 mm Body [SOIC]

Note: For the most current package drawings, please see the Microchip Packaging Specification located at http://www.microchip.com/packaging

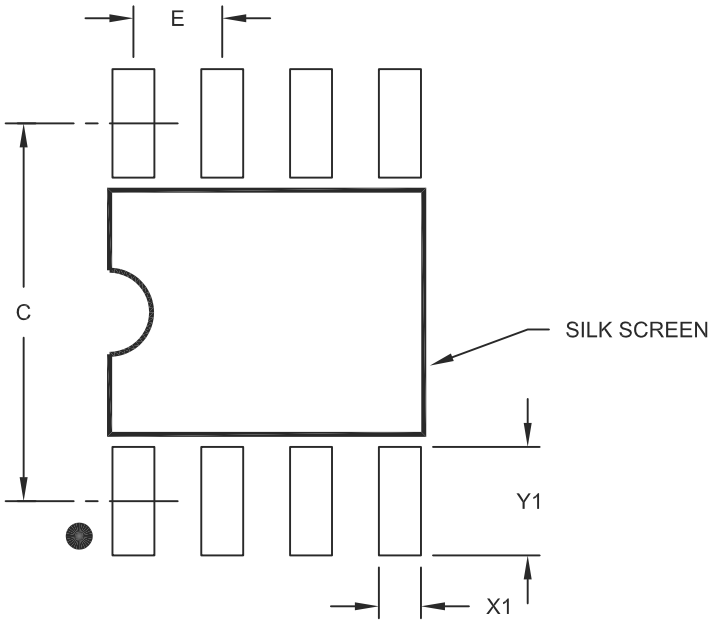

RECOMMENDED LAND PATTERN

Units		MILLIMETERS		
Dimension Limits		MIN	NOM	MAX
Contact Pitch	E		1.27 BSC	
Contact Pad Spacing	C		5.40	
Contact Pad Width (X8)	X1			0.60
Contact Pad Length (X8)	Y1			1.55

Notes:

1. Dimensioning and tolerancing per ASME Y14.5M

BSC: Basic Dimension. Theoretically exact value shown without tolerances.

Microchip Technology Drawing No. C04-2057A

APPENDIX A: REVISION HISTORY

Revision E

Added note to page 1 header (Not recommended for new designs).

Added Section 5.0: Package Marking Information.

Added On-line Support page.

Updated document format.

Revision F

Removed Preliminary Status.

© 2010 Microchip Technology Inc.

ON-LINE SUPPORT

Microchip provides on-line support on the Microchip World Wide Web site.

The web site is used by Microchip as a means to make files and information easily available to customers. To view the site, the user must have access to the Internet and a web browser, such as Netscape® or Microsoft® Internet Explorer. Files are also available for FTP download from our FTP site.

Connecting to the Microchip Internet Web Site

The Microchip web site is available at the following URL:

www.microchip.com

The file transfer site is available by using an FTP service to connect to:

ftp://ftp.microchip.com

The web site and file transfer site provide a variety of services. Users may download files for the latest Development Tools, Data Sheets, Application Notes, User's Guides, Articles and Sample Programs. A variety of Microchip specific business information is also available, including listings of Microchip sales offices, distributors and factory representatives. Other data available for consideration is:

- Latest Microchip Press Releases
- Technical Support Section with Frequently Asked Questions
- Design Tips
- Device Errata
- Job Postings
- Microchip Consultant Program Member Listing
- Links to other useful web sites related to Microchip Products
- Conferences for products, Development Systems, technical information and more
- Listing of seminars and events

SYSTEMS INFORMATION AND UPGRADE HOT LINE

The Systems Information and Upgrade Line provides system users a listing of the latest versions of all of Microchip's development systems software products. Plus, this line provides information on how customers can receive the most current upgrade kits. The Hot Line Numbers are:

1-800-755-2345 for U.S. and most of Canada, and

1-480-792-7302 for the rest of the world.

042003

READER RESPONSE

It is our intention to provide you with the best documentation possible to ensure successful use of your Microchip product. If you wish to provide your comments on organization, clarity, subject matter, and ways in which our documentation can better serve you, please FAX your comments to the Technical Publications Manager at (480) 792-4150.

Please list the following information, and use this outline to provide us with your comments about this document.

To: Technical Publications Manager Total Pages Sent _____

RE: Reader Response

From: Name _____

Company _____

Address _____

City / State / ZIP / Country _____

Telephone: (_____) _____ - _____ FAX: (_____) _____ - _____

Application (optional):

Would you like a reply? ___Y ___N

Device: 93LC76/86 Literature Number: DS21131F

Questions:

1. What are the best features of this document?

2. How does this document meet your hardware and software development needs?

3. Do you find the organization of this document easy to follow? If not, why?

4. What additions to the document do you think would enhance the structure and subject?

5. What deletions from the document could be made without affecting the overall usefulness?

6. Is there any incorrect or misleading information (what and where)?

7. How would you improve this document?

© 2010 Microchip Technology Inc.

PRODUCT IDENTIFICATION SYSTEM

To order or obtain information, e.g., on pricing or delivery, refer to the factory or the listed sales office.

PART NO.	X	/XX	XXX
Device	Temperature Range	Package	Pattern

Device	93LC76/86: Microwire Serial EEPROM 93LC76T/86T: Microwire Serial EEPROM (Tape and Reel)	
Temperature Range	Blank = 0°C to +70°C I = -40°C to +85°C	
Package	P = Plastic DIP (300 mil Body), 8-lead SN = Plastic SOIC (150 mil Body), 8-lead	

Sales and Support

Data Sheets
Products supported by a preliminary Data Sheet may have an errata sheet describing minor operational differences and recommended workarounds. To determine if an errata sheet exists for a particular device, please contact one of the following:

1. Your local Microchip sales office
2. The Microchip Corporate Literature Center U.S. FAX: (480) 792-7277
3. The Microchip Worldwide Site (www.microchip.com)

Please specify which device, revision of silicon and Data Sheet (include Literature #) you are using.

New Customer Notification System
Register on our web site (www.microchip.com/cn) to receive the most current information on our products.

NOTES:

© 2010 Microchip Technology Inc.

Note the following details of the code protection feature on Microchip devices:

- Microchip products meet the specification contained in their particular Microchip Data Sheet.
- Microchip believes that its family of products is one of the most secure families of its kind on the market today, when used in the intended manner and under normal conditions.
- There are dishonest and possibly illegal methods used to breach the code protection feature. All of these methods, to our knowledge, require using the Microchip products in a manner outside the operating specifications contained in Microchip's Data Sheets. Most likely, the person doing so is engaged in theft of intellectual property.
- Microchip is willing to work with the customer who is concerned about the integrity of their code.
- Neither Microchip nor any other semiconductor manufacturer can guarantee the security of their code. Code protection does not mean that we are guaranteeing the product as "unbreakable."

Code protection is constantly evolving. We at Microchip are committed to continuously improving the code protection features of our products. Attempts to break Microchip's code protection feature may be a violation of the Digital Millennium Copyright Act. If such acts allow unauthorized access to your software or other copyrighted work, you may have a right to sue for relief under that Act.

Information contained in this publication regarding device applications and the like is provided only for your convenience and may be superseded by updates. It is your responsibility to ensure that your application meets with your specifications. MICROCHIP MAKES NO REPRESENTATIONS OR WARRANTIES OF ANY KIND WHETHER EXPRESS OR IMPLIED, WRITTEN OR ORAL, STATUTORY OR OTHERWISE, RELATED TO THE INFORMATION, INCLUDING BUT NOT LIMITED TO ITS CONDITION, QUALITY, PERFORMANCE, MERCHANTABILITY OR FITNESS FOR PURPOSE**.** Microchip disclaims all liability arising from this information and its use. Use of Microchip devices in life support and/or safety applications is entirely at the buyer's risk, and the buyer agrees to defend, indemnify and hold harmless Microchip from any and all damages, claims, suits, or expenses resulting from such use. No licenses are conveyed, implicitly or otherwise, under any Microchip intellectual property rights.

Trademarks

The Microchip name and logo, the Microchip logo, dsPIC, KEELOQ, KEELOQ logo, MPLAB, PIC, PICmicro, PICSTART, rfPIC and UNI/O are registered trademarks of Microchip Technology Incorporated in the U.S.A. and other countries.

FilterLab, Hampshire, HI-TECH C, Linear Active Thermistor, MXDEV, MXLAB, SEEVAL and The Embedded Control Solutions Company are registered trademarks of Microchip Technology Incorporated in the U.S.A.

Analog-for-the-Digital Age, Application Maestro, CodeGuard, dsPICDEM, dsPICDEM.net, dsPICworks, dsSPEAK, ECAN, ECONOMONITOR, FanSense, HI-TIDE, In-Circuit Serial Programming, ICSP, Mindi, MiWi, MPASM, MPLAB Certified logo, MPLIB, MPLINK, mTouch, Octopus, Omniscient Code Generation, PICC, PICC-18, PICDEM, PICDEM.net, PICkit, PICtail, PIC^{32} logo, REAL ICE, rfLAB, Select Mode, Total Endurance, TSHARC, UniWinDriver, WiperLock and ZENA are trademarks of Microchip Technology Incorporated in the U.S.A. and other countries.

SQTP is a service mark of Microchip Technology Incorporated in the U.S.A.

All other trademarks mentioned herein are property of their respective companies.

© 2010, Microchip Technology Incorporated, Printed in the U.S.A., All Rights Reserved.

Printed on recycled paper.

QUALITY MANAGEMENT SYSTEM
CERTIFIED BY DNV
ISO/TS 16949:2002

Microchip received ISO/TS-16949:2002 certification for its worldwide headquarters, design and wafer fabrication facilities in Chandler and Tempe, Arizona; Gresham, Oregon and design centers in California and India. The Company's quality system processes and procedures are for its PIC® MCUs and dsPIC® DSCs, KEELOQ® code hopping devices, Serial EEPROMs, microperipherals, nonvolatile memory and analog products. In addition, Microchip's quality system for the design and manufacture of development systems is ISO 9001:2000 certified.

WORLDWIDE SALES AND SERVICE

AMERICAS

Corporate Office
2355 West Chandler Blvd.
Chandler, AZ 85224-6199
Tel: 480-792-7200
Fax: 480-792-7277
Technical Support:
http://support.microchip.com
Web Address:
www.microchip.com

Atlanta
Duluth, GA
Tel: 678-957-9614
Fax: 678-957-1455

Boston
Westborough, MA
Tel: 774-760-0087
Fax: 774-760-0088

Chicago
Itasca, IL
Tel: 630-285-0071
Fax: 630-285-0075

Cleveland
Independence, OH
Tel: 216-447-0464
Fax: 216-447-0643

Dallas
Addison, TX
Tel: 972-818-7423
Fax: 972-818-2924

Detroit
Farmington Hills, MI
Tel: 248-538-2250
Fax: 248-538-2260

Kokomo
Kokomo, IN
Tel: 765-864-8360
Fax: 765-864-8387

Los Angeles
Mission Viejo, CA
Tel: 949-462-9523
Fax: 949-462-9608

Santa Clara
Santa Clara, CA
Tel: 408-961-6444
Fax: 408-961-6445

Toronto
Mississauga, Ontario,
Canada
Tel: 905-673-0699
Fax: 905-673-6509

ASIA/PACIFIC

Asia Pacific Office
Suites 3707-14, 37th Floor
Tower 6, The Gateway
Harbour City, Kowloon
Hong Kong
Tel: 852-2401-1200
Fax: 852-2401-3431

Australia - Sydney
Tel: 61-2-9868-6733
Fax: 61-2-9868-6755

China - Beijing
Tel: 86-10-8528-2100
Fax: 86-10-8528-2104

China - Chengdu
Tel: 86-28-8665-5511
Fax: 86-28-8665-7889

China - Chongqing
Tel: 86-23-8980-9588
Fax: 86-23-8980-9500

China - Hong Kong SAR
Tel: 852-2401-1200
Fax: 852-2401-3431

China - Nanjing
Tel: 86-25-8473-2460
Fax: 86-25-8473-2470

China - Qingdao
Tel: 86-532-8502-7355
Fax: 86-532-8502-7205

China - Shanghai
Tel: 86-21-5407-5533
Fax: 86-21-5407-5066

China - Shenyang
Tel: 86-24-2334-2829
Fax: 86-24-2334-2393

China - Shenzhen
Tel: 86-755-8203-2660
Fax: 86-755-8203-1760

China - Wuhan
Tel: 86-27-5980-5300
Fax: 86-27-5980-5118

China - Xian
Tel: 86-29-8833-7252
Fax: 86-29-8833-7256

China - Xiamen
Tel: 86-592-2388138
Fax: 86-592-2388130

China - Zhuhai
Tel: 86-756-3210040
Fax: 86-756-3210049

ASIA/PACIFIC

India - Bangalore
Tel: 91-80-3090-4444
Fax: 91-80-3090-4123

India - New Delhi
Tel: 91-11-4160-8631
Fax: 91-11-4160-8632

India - Pune
Tel: 91-20-2566-1512
Fax: 91-20-2566-1513

Japan - Yokohama
Tel: 81-45-471- 6166
Fax: 81-45-471-6122

Korea - Daegu
Tel: 82-53-744-4301
Fax: 82-53-744-4302

Korea - Seoul
Tel: 82-2-554-7200
Fax: 82-2-558-5932 or
82-2-558-5934

Malaysia - Kuala Lumpur
Tel: 60-3-6201-9857
Fax: 60-3-6201-9859

Malaysia - Penang
Tel: 60-4-227-8870
Fax: 60-4-227-4068

Philippines - Manila
Tel: 63-2-634-9065
Fax: 63-2-634-9069

Singapore
Tel: 65-6334-8870
Fax: 65-6334-8850

Taiwan - Hsin Chu
Tel: 886-3-6578-300
Fax: 886-3-6578-370

Taiwan - Kaohsiung
Tel: 886-7-536-4818
Fax: 886-7-536-4803

Taiwan - Taipei
Tel: 886-2-2500-6610
Fax: 886-2-2508-0102

Thailand - Bangkok
Tel: 66-2-694-1351
Fax: 66-2-694-1350

EUROPE

Austria - Wels
Tel: 43-7242-2244-39
Fax: 43-7242-2244-393

Denmark - Copenhagen
Tel: 45-4450-2828
Fax: 45-4485-2829

France - Paris
Tel: 33-1-69-53-63-20
Fax: 33-1-69-30-90-79

Germany - Munich
Tel: 49-89-627-144-0
Fax: 49-89-627-144-44

Italy - Milan
Tel: 39-0331-742611
Fax: 39-0331-466781

Netherlands - Drunen
Tel: 31-416-690399
Fax: 31-416-690340

Spain - Madrid
Tel: 34-91-708-08-90
Fax: 34-91-708-08-91

UK - Wokingham
Tel: 44-118-921-5869
Fax: 44-118-921-5820

01/05/10

© 2010 Microchip Technology Inc.