TCN75

2-Wire Serial Temperature Sensor and Thermal Monitor

Features:

- Solid-State Temperature Sensing: 0.5°C Accuracy (Typ.)
- Operates from -55°C to +125°C
- Operating Supply Range: 2.7V to 5.5V
- Programmable Trip Point and Hysteresis with Power-up Defaults
- Standard 2-Wire Serial Interface
- Thermal Event Alarm Output Functions as Interrupt or Comparator/Thermostat Output
- Up to 8 TCN75s may Share the Same Bus
- Shutdown Mode for Low Standby Power Consumption
- 5V Tolerant I/O at V_{DD} = 3V
- Low Power:
  - 250 μA (Typ.) Operating
  - 1 μA (Typ.) Shutdown Mode
- 8-Pin SOIC and MSOP Packaging

Applications:

- Thermal Protection for High-Performance CPUs
- Solid-State Thermometer
- Fire/Heat Alarms
- Thermal Management in Electronic Systems:
  - Computers
  - Telecom Racks
  - Power Supplies/UPS/Amplifiers
- Copiers/Office Electronics
- Consumer Electronics
- Process Control

Package Type

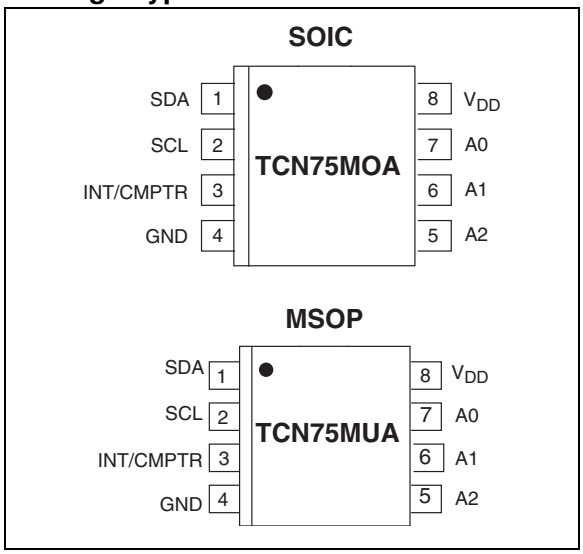

General Description:

The TCN75 is a serially programmable temperature sensor that notifies the host controller when ambient temperature exceeds a user programmed set point. Hysteresis is also programmable. The INT/CMPTR output is programmable as either a simple comparator for thermostat operation or as a temperature event interrupt. Communication with the TCN75 is accomplished via a two-wire bus that is compatible with industry standard protocols. This permits reading the current temperature, programming the set point and hysteresis, and configuring the device.

The TCN75 powers up in Comparator mode with a default set point of 80°C with 5°C hysteresis. Defaults allow independent operation as a stand-alone thermostat. A shutdown command may be sent via the 2-wire bus to activate the low-power Standby mode. Address selection inputs allow up to eight TCN75s to share the same 2-wire bus for multizone monitoring.

All registers can be read by the host and the INT/CMPTR output's polarity is user programmable. Both polled and interrupt driven systems are easily accommodated. Small physical size, low installed cost, and ease-of-use make the TCN75 an ideal choice for implementing sophisticated system management schemes.

© 2001-2012 Microchip Technology Inc.

Device Selection Table

Part Number	Supply Voltage	Package	Junction Temperature Range
TCN75-3.3MOA	3.3	8-Pin SOIC	-55°C to +125°C
TCN75-5.0MOA	5.0	8-Pin SOIC	-55°C to +125°C
TCN75-3.3MUA	3.3	8-Pin MSOP	-55°C to +125°C
TCN75-5.0MUA	5.0	8-PIn MSOP	-55°C to +125°C

Functional Block Diagram

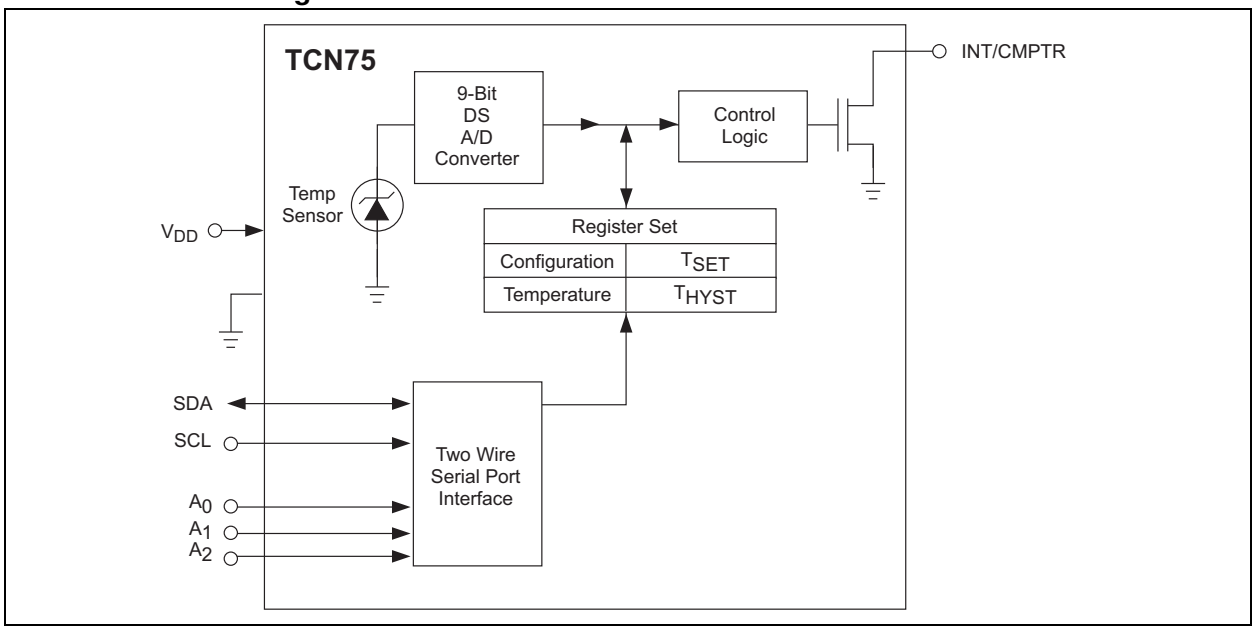

© 2001-2012 Microchip Technology Inc.

1.0 ELECTRICAL CHARACTERISTICS

Absolute Maximum Ratings*

Supply Voltage (V_{DD}) 6.0V

ESD Susceptibility **(Note 3)** 1000V

Voltage on Pins:
A0, A1, A2 ..... (GND – 0.3V) to (V_{DD} + 0.3V)

Voltage on Pins:
SDA, SCL, INT/CMPTR .. (GND – 0.3V) to 5.5V

Thermal Resistance (Junction to Ambient)
8-Pin SOIC ..... 170°C/W
8-Pin MSOP ..... 250°C//W

Operating Temperature Range (T_J): -55°C to +125°C

Storage Temperature Range (T_{STG}): -65°C to +150°C

*Stresses above those listed under "Absolute Maximum Ratings" may cause permanent damage to the device. These are stress ratings only and functional operation of the device at these or any other conditions above those indicated in the operation sections of the specifications is not implied. Exposure to Absolute Maximum Rating conditions for extended periods may affect device reliability.

TCN75 ELECTRICAL SPECIFICATIONS

Electrical Characteristics: V_{DD} = 2.7V – 5.5V, -55°C ≤ (T_A = T_J) ≤ 125°C, unless otherwise noted.						
Symbol	**Parameter**	**Min**	**Typ**	**Max**	**Units**	**Test Conditions**
Power Supply						
V_{DD}	Power Supply Voltage	2.7	—	5.5	—	
I_{DD}	Operating Current	— —	0.250 —	— 1.0	mA	Serial Port Inactive (T_A = T_J = 25°C) Serial Port Active
I_{DD1}	Standby Supply Current	—	1	—	µA	Shutdown Mode, Serial Port Inactive (T_A = T_J = 25°C)
INT/CMPTR Output						
I_{OL}	Sink Current: INT/CMPTR, SDA Outputs	—	1	4	mA	**Note 1**
t_{TRIP}	INT/CMPTR Response Time	1	—	6	t_{CONV}	User Programmable
V_{OL}	Output Low Voltage	—	—	0.8	V	I_{OL} = 4.0 mA
Temp-to-Bits Converter						
ΔT	Temperature Accuracy **(Note 2)**	—	±3	—	°C	-55°C ≤ T_A ≤ +125°C
						V_{DD} = 3.3V: TCN75-3.3 MOA, TCN75-3.3 MUA V_{DD} = 5.0V: TCN75-5.0 MOA, TCN75-5.0 MUA
		—	±0.5	±3	°C	25°C ≤ T_A ≤ 100°C
t_{CONV}	Conversion Time	—	55	—	msec	
$T_{SET(PU)}$	TEMP Default Value	—	80	—	°C	Power-up
$T_{HYST(PU)}$	T_{HYST} Default Value	—	75	—	°C	Power-up
2-Wire Serial Bus Interface						
V_{IH}	Logic Input High	V_{DD} x 0.7	—	—	V	
V_{IL}	Logic Input Low	—	—	V_{DD} x 0.3	V	
V_{OL}	Logic Output Low	—	—	0.4	V	I_{OL} = 3 mA
C_{IN}	Input Capacitance SDA, SCL	—	15	—	pF	
I_{LEAK}	I/O Leakage	—	±100	—	pA	(T_A = T_J = 25°C)
$I_{OL(SDA)}$	SDA Output Low Current	—	—	6	mA	

© 2001-2012 Microchip Technology Inc.

TCN75 ELECTRICAL SPECIFICATIONS (CONTINUED)

Electrical Characteristics: 2.7V ≤ V_{DD} ≤ 5.5V; -55°C ≤ (T_A = T_J) ≤ 125°C, C_L = 80 pF, unless otherwise noted.						
Symbol	**Parameter**	**Min**	**Typ**	**Max**	**Unit**	**Test Conditions**
Serial Port Timing						
f_{SC}	Serial Port Frequency	0	100	400	kHz	
t_{LOW}	Low Clock Period	1250	—	—	nsec	
t_{HIGH}	High Clock Period	1250	—	—	nsec	
t_R	SCL and SDA Rise Time	—	—	250	nsec	
t_F	SCL and SDA Fall Time	—	—	250	nsec	
$t_{SU(START)}$	Start Condition Setup Time (for repeated Start Condition)	1250	—	—	nsec	
t_{SC}	SCL Clock Period	2.5	—	—	µsec	
$t_{H(START)}$	Start Condition Hold Time	100	—	—	nsec	
t_{DSU}	Data in Setup Time to SCL High	100	—	—	nsec	
t_{DH}	Data in Hold Time after SCL Low	0	—	—	nsec	
$t_{SU(STOP)}$	Stop Condition Setup Time	100	—	—	nsec	
t_{IDLE}	Bus Free Time Prior to New Transition	1250	—	—	nsec	

Note 1: Output current should be minimized for best temperature accuracy. Power dissipation within the TCN75 will cause self-heating and temperature drift. At maximum rated output current and saturation voltage, 4 mA and 0.8V, respectively, the error amounts to 0.544°C for the SOIC.

2: All part types of the TCN75 will operate properly over the wider power supply range of 2.7V to 5.5V. Each part type is tested and specified for rated accuracy at its nominal supply voltage. As V_{DD} varies from the nominal value, accuracy will degrade 1°C/V of V_{DD} change.

3: Human body model, 100 pF discharged through a 1.5k resistor.

TIMING DIAGRAM

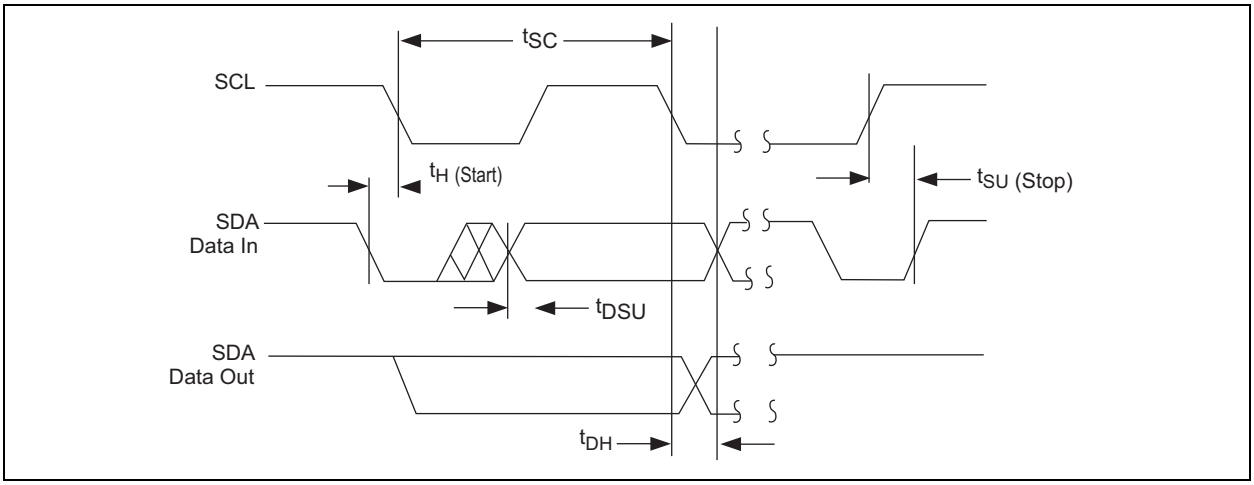

© 2001-2012 Microchip Technology Inc.

2.0 PIN DESCRIPTIONS

The descriptions of the pins are listed in Table 2-1.

TABLE 2-1: PIN FUNCTION TABLE

Pin Number (8-Pin SOIC) 8-Pin MSOP)	Symbol	Description
1	SDA	Bidirectional Serial Data.
2	SCL	Serial Data Clock Input.
3	INT/CMPTR	Interrupt or Comparator Output.
4	GND	System Ground.
5	A_2	Address Select Pin (MSB).
6	A_1	Address Select Pin.
7	A_0	Address Select Pin (LSB).
8	V_{DD}	Power Supply Input.

© 2001-2012 Microchip Technology Inc.

3.0 DETAILED DESCRIPTION

A typical TCN75 hardware connection is shown in Figure 3-1.

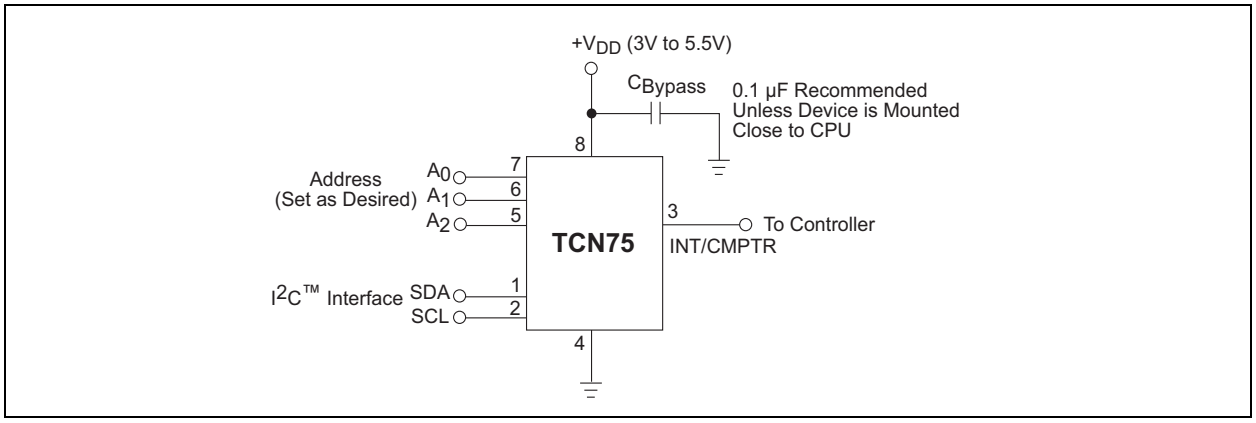

FIGURE 3-1: *Typical Application*

3.1 Serial Data (SDA)

Bidirectional. Serial data is transferred in both directions using this pin.

3.2 Serial Clock (SCL)

Input. Clocks data into and out of the TCN75.

3.3 INT/CMPTR

Open Collector, Programmable Polarity. In Comparator mode, unconditionally driven active any time temperature exceeds the value programmed into the T_{SET} register. INT/CMPTR will become inactive when temperature subsequently falls below the T_{HYST} setting. (See **Section 5.0 "Register Set and Programmer's ModeL"**, Register Set and Programmer's Model). In Interrupt mode, INT/CMPTR is also made active by TEMP exceeding T_{SET}; it is unconditionally reset to its inactive state by reading any register via the 2-wire bus. If and when temperature falls below T_{HYST}, INT/CMPTR is again driven active. Reading any register will clear the T_{HYST} interrupt. In Interrupt mode, the INT/CMPTR output is unconditionally reset upon entering Shutdown mode. If programmed as an active-low output, it can be wire-ORed with any number of other open collector devices. Most systems will require a pull-up resistor for this configuration.

Note that current sourced from the pull-up resistor causes power dissipation and may cause internal heating of the TCN75. To avoid affecting the accuracy of ambient temperature readings, the pull-up resistor should be made as large as possible. INT/CMPTR's output polarity may be programmed by writing to the INT/CMPTR POLARITY bit in the CONFIG register. The default is active low.

3.4 Address (A2, A1, A0)

Inputs. Sets the three Least Significant bits of the TCN75 8-bit address. A match between the TCN75's address and the address specified in the serial bit stream must be made to initiate communication with the TCN75. Many protocol-compatible devices with other addresses may share the same 2-wire bus.

3.5 Slave Address

The four Most Significant bits of the Address Byte (A6, A5, A4, A3) are fixed to 1001[B]. The states of A2, A1 and A0 in the serial bit stream must match the states of the A2, A1 and A0 address inputs for the TCN75 to respond with an Acknowledge (indicating the TCN75 is on the bus and ready to accept data). The Slave Address is represented in Table 3-1.

TABLE 3-1: TCN75 SLAVE ADDRESS

1	0	0	1	A2	A1	A0
MSB						LSBS

© 2001-2012 Microchip Technology Inc.

3.6 Comparator/Interrupt Modes

INT/CMPTR behaves differently depending on whether the TCN75 is in Comparator mode or Interrupt mode. Comparator mode is designed for simple thermostatic operation. INT/CMPTR will go active anytime TEMP exceeds T_{SET}. When in Comparator mode, INT/CMPTR will remain active until TEMP falls below T_{HYST}, whereupon it will reset to its inactive state. The state of INT/CMPTR is maintained in Shutdown mode when the TCN75 is in Comparator mode. In Interrupt mode, INT/CMPTR will remain active indefinitely, even if TEMP falls below T_{HYST}, until any register is read via the 2-wire bus. Interrupt mode is better suited to interrupt driven microprocessor-based systems. The INT/CMPTR output may be wire-OR'ed with other interrupt sources in such systems. Note that a pull-up resistor is necessary on this pin since it is an open-drain output. Entering Shutdown mode will unconditionally reset INT/CMPTR when in Interrupt mode.

© 2001-2012 Microchip Technology Inc.

4.0 SHUTDOWN MODE

When the appropriate bit is set in the configuration register (CONFIG) the TCN75 enters its low-power Shutdown mode (I_{DD} = 1 μA, typical) and the temperature-to-digital conversion process is halted. The TCN75's bus interface remains active and TEMP, T_{SET}, and T_{HYST} may be read from and written to. Transitions on SDA or SCL due to external bus activity may increase the standby power consumption. If the TCN75 is in Interrupt mode, the state of INT/CMPTR will be reset upon entering Shutdown mode.

4.1 Fault Queue

To lessen the probability of spurious activation of INT/CMPTR the TCN75 may be programmed to filter out transient events. This is done by programming the desired value into the Fault Queue. Logic inside the TCN75 will prevent the device from triggering INT/CMPTR unless the programmed number of sequential temperature-to-digital conversions yield the same qualitative result. In other words, the value reported in TEMP must remain above T_{SET} or below T_{HYST} for the consecutive number of cycles programmed in the Fault Queue. Up to a six-cycle "filter" may be selected. See **Section 5.0 "Register Set and Programmer's ModeL"**, Register Set and Programmer's Model.

4.2 Serial Port Operation

The Serial Clock input (SCL) and bidirectional data port (SDA) form a 2-wire bidirectional serial port for programming and interrogating the TCN75. The following table indicates TCN75 conventions that are used in this bus scheme.

TABLE 4-1: SERIAL BUS CONVENTIONS

Term	Explanation
Transmitter	The device sending data to the bus.
Receiver	The device receiving data from the bus.
Master	The device which controls the bus: initiating transfers (Start), generating the clock, and terminating transfers (Stop).
Slave	The device addressed by the master.
Start	A unique condition signaling the beginning of a transfer indicated by SDA falling (High – Low) while SCL is high.
Stop	A unique condition signaling the end of a transfer indicated by SDA rising (Low – High) while SCL is high.
ACK	A Receiver acknowledges the receipt of each byte with this unique condition. The Receiver drives SDA low during SCL high of the ACK clock-pulse. The Master provides the clock pulse for the ACK cycle.
NOT Busy	When the bus is idle, both SDA & SCL will remain high.
Data Valid	The state of SDA must remain stable during the High period of SCL in order for a data bit to be considered valid. SDA only changes state while SCL is low during normal data transfers. (See Start and Stop conditions).

All transfers take place under control of a host, usually a CPU or microcontroller, acting as the Master, which provides the clock signal for all transfers. The TCN75 *always* operates as a Slave. This serial protocol is illustrated in Figure 5-1. All data transfers have two phases; and all bytes are transferred MSB first. Accesses are initiated by a Start condition, followed by a device address byte and one or more data bytes. The device address byte includes a Read/Write selection bit. Each access must be terminated by a Stop condition. A convention called Acknowledge (ACK) confirms receipt of each byte. Note that SDA can change only during periods when SCL is LOW (SDA changes while SCL is HIGH are reserved for Start and Stop conditions).

4.3 Start Condition (Start)

The TCN75 continuously monitors the SDA and SCL lines for a Start condition (a HIGH-to-LOW transition of SDA while SCL is HIGH), and will not respond until this condition is met.

© 2001-2012 Microchip Technology Inc.

4.3.1 ADDRESS BYTE

Immediately following the Start condition, the host must next transmit the address byte to the TCN75. The four Most Significant bits of the Address Byte (A6, A5, A4, A3) are fixed to 1001(B). The states of A2, A1 and A0 in the serial bit stream must match the states of the A2, A1 and A0 address inputs for the TCN75 to respond with an Acknowledge (indicating the TCN75 is on the bus and ready to accept data). The eighth bit in the Address Byte is a Read/Write Bit. This bit is a '1' for a read operation or '0' for a write operation.

4.3.2 ACKNOWLEDGE (ACK)

Acknowledge (ACK) provides a positive handshake between the host and the TCN75. The host releases SDA after transmitting eight bits then generates a ninth clock cycle to allow the TCN75 to pull the SDA line LOW to acknowledge that it successfully received the previous eight bits of data or address.

4.3.3 DATA BYTE

After a successful ACK of the address byte, the host must next transmit the data byte to be written or clock out the data to be read. (See the appropriate timing diagrams.) ACK will be generated after a successful write of a data byte into the TCN75.

4.3.4 STOP CONDITION (STOP)

Communications must be terminated by a Stop condition (a LOW-to-HIGH transition of SDA while SCL is HIGH). The Stop condition must be communicated by the transmitter to the TCN75.

4.3.5 POWER SUPPLY

To minimize temperature measurement error, the TCN75-3.3 MOA and TCN75-3.3 MUA are factory calibrated at a supply voltage of 3.3V ±5% and the TCN75-5.0 MOA and TCN75-5.0 MUA are factory calibrated at a supply voltage of 5V ±5%. Either device is fully operational over the power supply voltage range of 2.7V to 5.5V, but with a lower measurement accuracy. The typical value of this power supply-related error is ±2°C.

5.0 REGISTER SET AND PROGRAMMER'S MODEL

TABLE 5-1: REGISTER (POINT), 8 BITS, WRITE ONLY

D[7]	D[6]	D[5]	D[4]	D[3]	D[2]	D[1]	D[0]
Must Be Set To Zero						Pointer	

Register Selection Via the Pointer Register		
D1	**D0**	**Register Selection**
0	0	TEMP
0	1	CONFIG
1	0	T_{HYST}
1	1	T_{SET}

TABLE 5-2: CONFIGURATION REGISTER (CONFIG), 8 BITS, READ/ WRITE

D [7]	D [6]	D [5]	D [4]	D [3]	D [2]	D [1]	D [0]
Must Be Set To Zero			Fault Queue		INT/ CMPTR, Polarity	COMP/INT	Shut-down

D0: Shutdown:

0 = Normal Operation

1 = Shutdown Mode

D1: CMPTR/INT:

0 = Comparator Mode

1 = Interrupt Mode

D2: INT/CMPTR POLARITY:

0 = Active Low

1 = Active High

D3 – D4: Fault Queue: Number of sequential temperature-to-digital conversions with the same result before the INT/CMPTR output is updated:

D4	D3	Number of Conversions
0	0	1 (Power-up default)
0	1	2
1	0	4
1	1	6

© 2001-2012 Microchip Technology Inc.

TABLE 5-3: TEMPERATURE (TEMP) REGISTER, 16 BITS, READ ONLY

The binary value in this register represents ambient temperature following a conversion cycle.

D[15]	D[14]	D[13]	D[12]	D[11]	D[10]	D[9]	D[8]	D[7]	D[6]	D[5]	D[4]	D[3]	D[2]	D[1]	D[0]
MSB	D7	D6	D5	D4	D3	D2	D1	LSB	X	X	X	X	X	X	X

TABLE 5-4: TEMPERATURE SET POINT (T_{SET}) REGISTER, 16 BITS, READ/WRITE

D[15]	D[14]	D[13]	D[12]	D[11]	D[10]	D[9]	D[8]	D[7]	D[6]	D[5]	D[4]	D[3]	D[2]	D[1]	D[0]
MSB	D7	D6	D5	D4	D3	D2	D1	LSB	X	X	X	X	X	X	X

TABLE 5-5: HYSTERESIS (T_{HYST}) REGISTER, 16 BITS, READ/WRITE

D[15]	D[14]	D[13]	D[12]	D[11]	D[10]	D[9]	D[8]	D[7]	D[6]	D[5]	D[4]	D[3]	D[2]	D[1]	D[0]
MSB	D7	D6	D5	D4	D3	D2	D1	LSB	X	X	X	X	X	X	X

In the TEMP, T_{SET}, and T_{HYST} registers, each unit value represents one-half degree (Celsius). The value is in 2's – complement binary format such that a reading of 000000000b corresponds to 0°C. Examples of this temperature to binary value relationship are shown in Table 5-6.

TABLE 5-6: TEMPERATURE TO DIGITAL VALUE CONVERSION

Temperature	Binary Value	HEX Value
+125°C	0 11111010	0FA
+25°C	0 00110010	032
+0.5°C	0 00000001	001
0°C	0 00000000	00
0.5°C	1 11111111	1FF
-25°C	1 11001110	1CE
-40°C	1 10110000	1B0
-55°C	1 10010010	192

TABLE 5-7: TCN75'S REGISTER SET SUMMARY

Name	Description	Width	Read	Write	Notes
TEMP	Ambient Temperature	16	X		2's Complement Format
TSET	Temperature Setpoint	16	X	X	2's Complement Format
T_{HYST}	Temperature Hysteresis	16	X	X	2's Complement Format
POINT	Register Pointer	8	X	X	
CONFIG	Configuration Register	8	X	X	

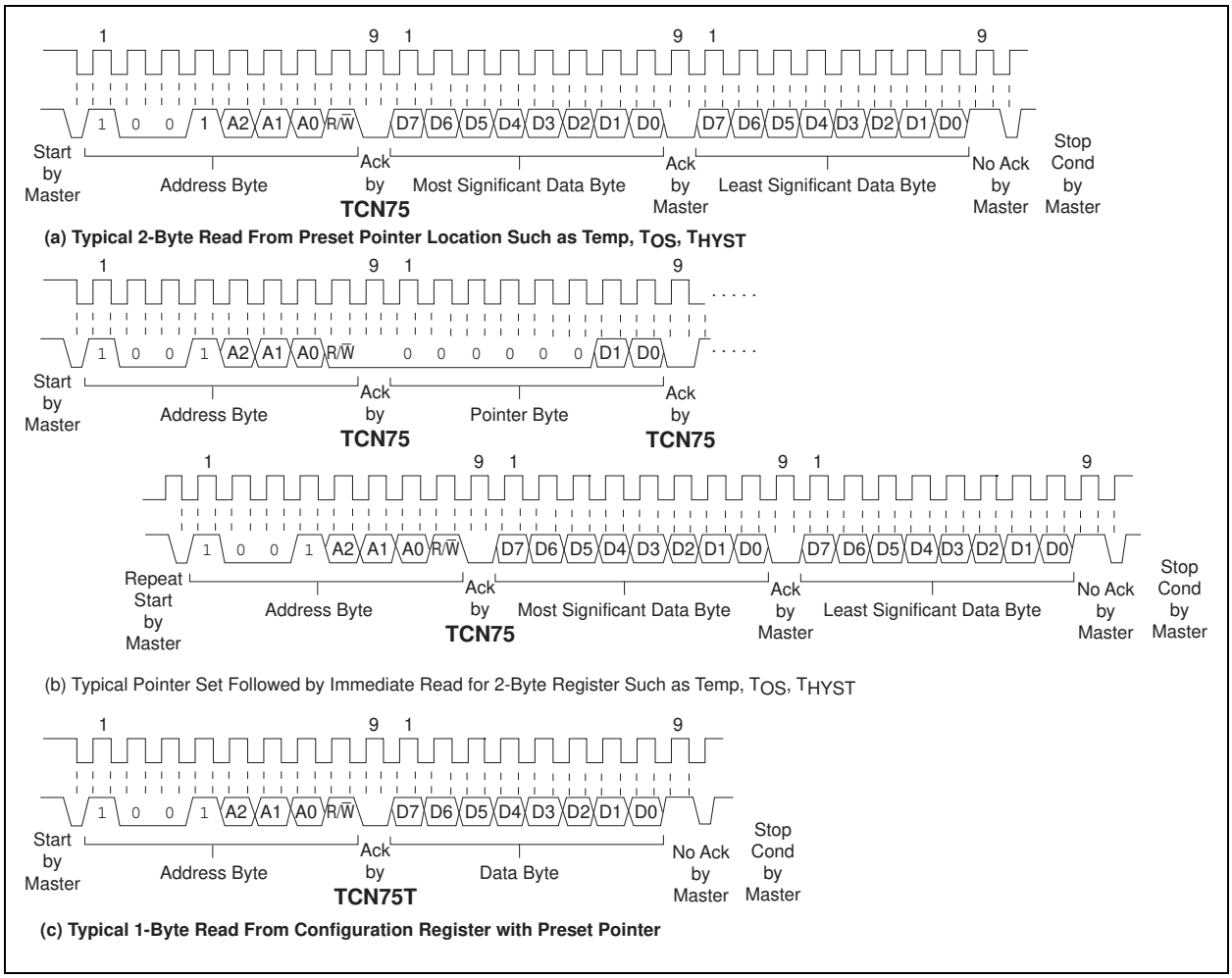

FIGURE 5-1: *Timing Diagrams*

© 2001-2012 Microchip Technology Inc.

Timing Diagrams (Continued)

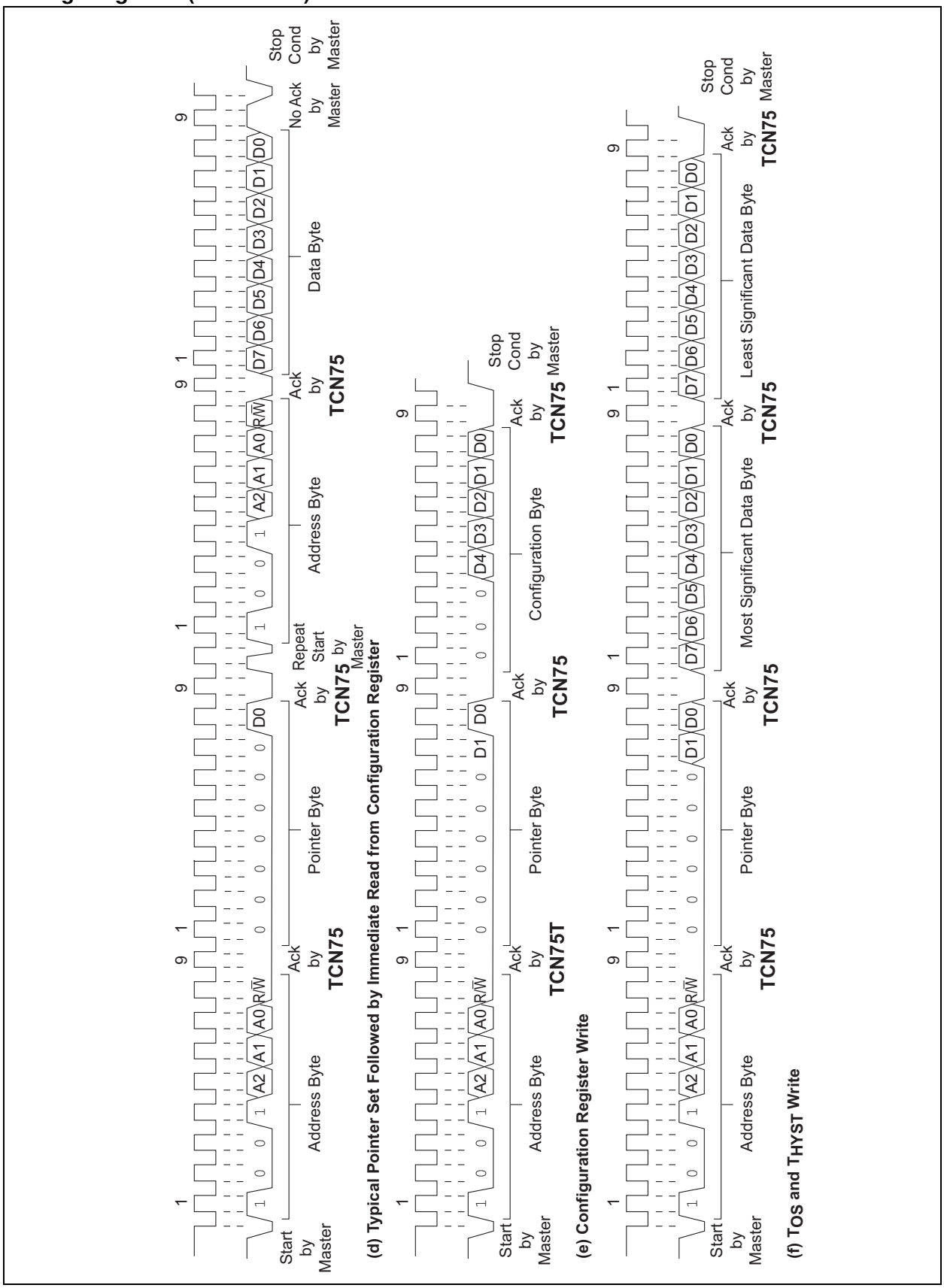

6.0 PACKAGING INFORMATION

6.1 Package Marking Information

Package marking data not available at this time.

6.2 Taping Form

Component Taping Orientation for 8-Pin MSOP Devices

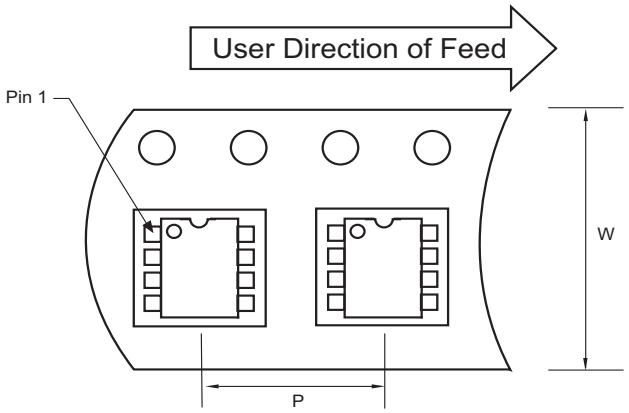

Standard Reel Component Orientation
for 713 Suffix Device

Carrier Tape, Number of Components Per Reel and Reel Size

Package	Carrier Width (W)	Pitch (P)	Part Per Full Reel	Reel Size
8-Pin MSOP	12 mm	8 mm	2500	13 in

Component Taping Orientation for 8-Pin SOIC (Narrow) Devices

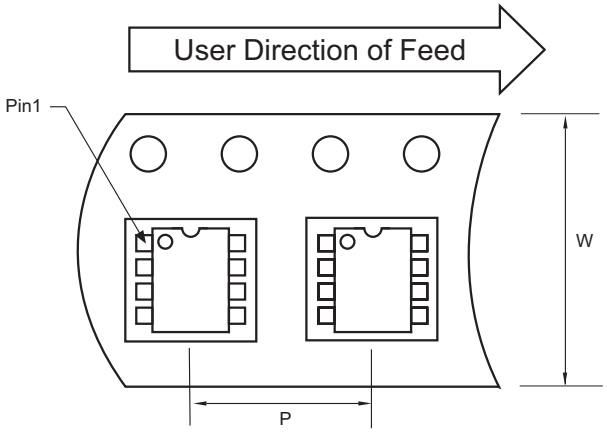

Standard Reel Component Orientation
for 713 Suffix Device

Carrier Tape, Number of Components Per Reel and Reel Size

Package	Carrier Width (W)	Pitch (P)	Part Per Full Reel	Reel Size
8-Pin SOIC (N)	12 mm	8 mm	2500	13 in

© 2001-2012 Microchip Technology Inc.

6.3 Package Dimensions

Note: For the most current package drawings, please see the Microchip Packaging Specification located at http://www.microchip.com/packaging

8-Pin MSOP

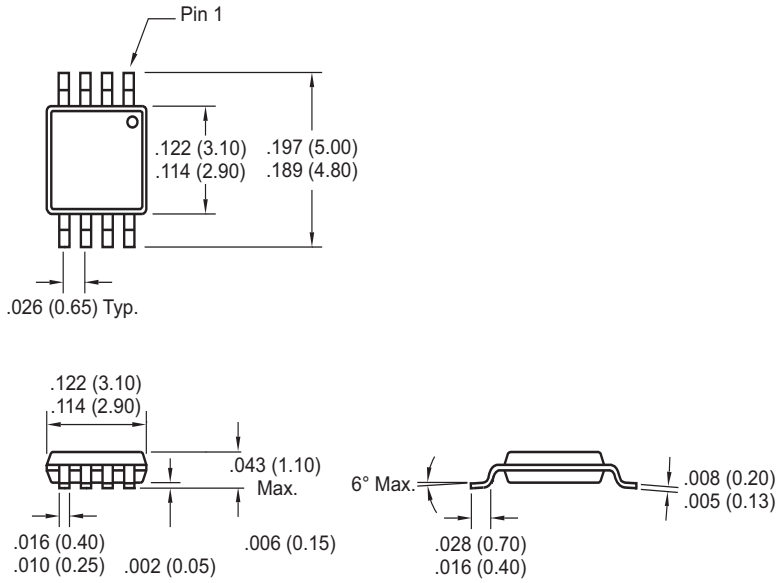

Dimensions: inches (mm)

Note: For the most current package drawings, please see the Microchip Packaging Specification located at http://www.microchip.com/packaging

8-Pin SOIC

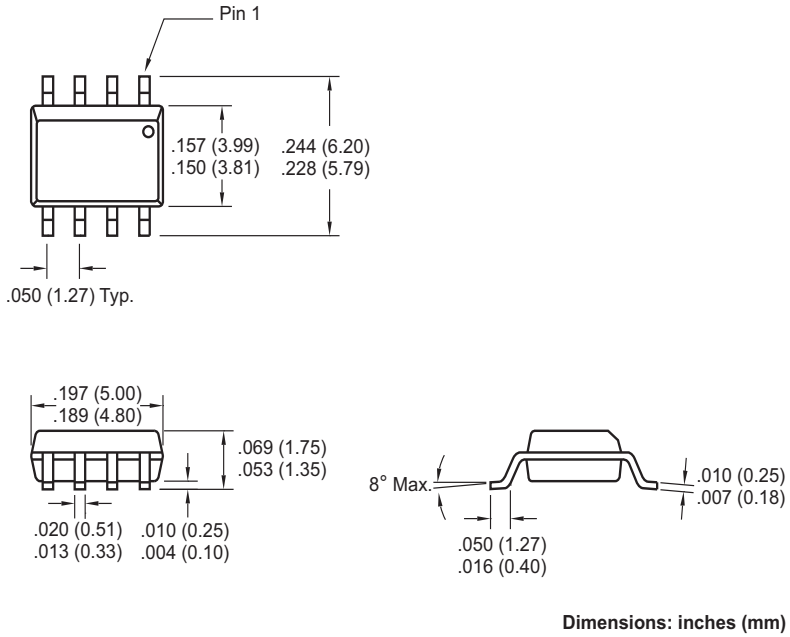

Dimensions: inches (mm)

7.0 REVISION HISTORY

Revision D (December 2012)

Added a note to each package outline drawing.

© 2001-2012 Microchip Technology Inc.

THE MICROCHIP WEB SITE

Microchip provides online support via our WWW site at www.microchip.com. This web site is used as a means to make files and information easily available to customers. Accessible by using your favorite Internet browser, the web site contains the following information:

- **Product Support** – Data sheets and errata, application notes and sample programs, design resources, user's guides and hardware support documents, latest software releases and archived software
- **General Technical Support** – Frequently Asked Questions (FAQ), technical support requests, online discussion groups, Microchip consultant program member listing
- **Business of Microchip** – Product selector and ordering guides, latest Microchip press releases, listing of seminars and events, listings of Microchip sales offices, distributors and factory representatives

CUSTOMER CHANGE NOTIFICATION SERVICE

Microchip's customer notification service helps keep customers current on Microchip products. Subscribers will receive e-mail notification whenever there are changes, updates, revisions or errata related to a specified product family or development tool of interest.

To register, access the Microchip web site at www.microchip.com. Under "Support", click on "Customer Change Notification" and follow the registration instructions.

CUSTOMER SUPPORT

Users of Microchip products can receive assistance through several channels:

- Distributor or Representative
- Local Sales Office
- Field Application Engineer (FAE)
- Technical Support

Customers should contact their distributor, representative or field application engineer (FAE) for support. Local sales offices are also available to help customers. A listing of sales offices and locations is included in the back of this document.

Technical support is available through the web site at: http://microchip.com/support

READER RESPONSE

It is our intention to provide you with the best documentation possible to ensure successful use of your Microchip product. If you wish to provide your comments on organization, clarity, subject matter, and ways in which our documentation can better serve you, please FAX your comments to the Technical Publications Manager at (480) 792-4150.

Please list the following information, and use this outline to provide us with your comments about this document.

TO: Technical Publications Manager Total Pages Sent _____

RE: Reader Response

From: Name _____

Company _____

Address _____

City / State / ZIP / Country _____

Telephone: (_____) _____ - _____ FAX: (_____) _____ - _____

Application (optional):

Would you like a reply? ___Y ___N

Device: TCN75 Literature Number: DS21490D

Questions:

1. What are the best features of this document?

2. How does this document meet your hardware and software development needs?

3. Do you find the organization of this document easy to follow? If not, why?

4. What additions to the document do you think would enhance the structure and subject?

5. What deletions from the document could be made without affecting the overall usefulness?

6. Is there any incorrect or misleading information (what and where)?

7. How would you improve this document?

© 2001-2012 Microchip Technology Inc.

Note the following details of the code protection feature on Microchip devices:

- Microchip products meet the specification contained in their particular Microchip Data Sheet.
- Microchip believes that its family of products is one of the most secure families of its kind on the market today, when used in the intended manner and under normal conditions.
- There are dishonest and possibly illegal methods used to breach the code protection feature. All of these methods, to our knowledge, require using the Microchip products in a manner outside the operating specifications contained in Microchip's Data Sheets. Most likely, the person doing so is engaged in theft of intellectual property.
- Microchip is willing to work with the customer who is concerned about the integrity of their code.
- Neither Microchip nor any other semiconductor manufacturer can guarantee the security of their code. Code protection does not mean that we are guaranteeing the product as "unbreakable."

Code protection is constantly evolving. We at Microchip are committed to continuously improving the code protection features of our products. Attempts to break Microchip's code protection feature may be a violation of the Digital Millennium Copyright Act. If such acts allow unauthorized access to your software or other copyrighted work, you may have a right to sue for relief under that Act.

Information contained in this publication regarding device applications and the like is provided only for your convenience and may be superseded by updates. It is your responsibility to ensure that your application meets with your specifications. MICROCHIP MAKES NO REPRESENTATIONS OR WARRANTIES OF ANY KIND WHETHER EXPRESS OR IMPLIED, WRITTEN OR ORAL, STATUTORY OR OTHERWISE, RELATED TO THE INFORMATION, INCLUDING BUT NOT LIMITED TO ITS CONDITION, QUALITY, PERFORMANCE, MERCHANTABILITY OR FITNESS FOR PURPOSE**.** Microchip disclaims all liability arising from this information and its use. Use of Microchip devices in life support and/or safety applications is entirely at the buyer's risk, and the buyer agrees to defend, indemnify and hold harmless Microchip from any and all damages, claims, suits, or expenses resulting from such use. No licenses are conveyed, implicitly or otherwise, under any Microchip intellectual property rights.

Trademarks

The Microchip name and logo, the Microchip logo, dsPIC, FlashFlex, KEELOQ, KEELOQ logo, MPLAB, PIC, PICmicro, PICSTART, PIC^{32} logo, rfPIC, SST, SST Logo, SuperFlash and UNI/O are registered trademarks of Microchip Technology Incorporated in the U.S.A. and other countries.

FilterLab, Hampshire, HI-TECH C, Linear Active Thermistor, MTP, SEEVAL and The Embedded Control Solutions Company are registered trademarks of Microchip Technology Incorporated in the U.S.A.

Silicon Storage Technology is a registered trademark of Microchip Technology Inc. in other countries.

Analog-for-the-Digital Age, Application Maestro, BodyCom, chipKIT, chipKIT logo, CodeGuard, dsPICDEM, dsPICDEM.net, dsPICworks, dsSPEAK, ECAN, ECONOMONITOR, FanSense, HI-TIDE, In-Circuit Serial Programming, ICSP, Mindi, MiWi, MPASM, MPF, MPLAB Certified logo, MPLIB, MPLINK, mTouch, Omniscient Code Generation, PICC, PICC-18, PICDEM, PICDEM.net, PICkit, PICtail, REAL ICE, rfLAB, Select Mode, SQI, Serial Quad I/O, Total Endurance, TSHARC, UniWinDriver, WiperLock, ZENA and Z-Scale are trademarks of Microchip Technology Incorporated in the U.S.A. and other countries.

SQTP is a service mark of Microchip Technology Incorporated in the U.S.A.

GestIC and ULPP are registered trademarks of Microchip Technology Germany II GmbH & Co. & KG, a subsidiary of Microchip Technology Inc., in other countries.

All other trademarks mentioned herein are property of their respective companies.

© 2001-2012, Microchip Technology Incorporated, Printed in the U.S.A., All Rights Reserved.

Printed on recycled paper.

ISBN: 9781620768815

QUALITY MANAGEMENT SYSTEM
CERTIFIED BY DNV
═ ISO/TS 16949 ═

Microchip received ISO/TS-16949:2009 certification for its worldwide headquarters, design and wafer fabrication facilities in Chandler and Tempe, Arizona; Gresham, Oregon and design centers in California and India. The Company's quality system processes and procedures are for its PIC® MCUs and dsPIC® DSCs, KEELOQ® code hopping devices, Serial EEPROMs, microperipherals, nonvolatile memory and analog products. In addition, Microchip's quality system for the design and manufacture of development systems is ISO 9001:2000 certified.

Worldwide Sales and Service

AMERICAS

Corporate Office
2355 West Chandler Blvd.
Chandler, AZ 85224-6199
Tel: 480-792-7200
Fax: 480-792-7277
Technical Support:
http://www.microchip.com/support
Web Address:
www.microchip.com

Atlanta
Duluth, GA
Tel: 678-957-9614
Fax: 678-957-1455

Boston
Westborough, MA
Tel: 774-760-0087
Fax: 774-760-0088

Chicago
Itasca, IL
Tel: 630-285-0071
Fax: 630-285-0075

Cleveland
Independence, OH
Tel: 216-447-0464
Fax: 216-447-0643

Dallas
Addison, TX
Tel: 972-818-7423
Fax: 972-818-2924

Detroit
Farmington Hills, MI
Tel: 248-538-2250
Fax: 248-538-2260

Indianapolis
Noblesville, IN
Tel: 317-773-8323
Fax: 317-773-5453

Los Angeles
Mission Viejo, CA
Tel: 949-462-9523
Fax: 949-462-9608

Santa Clara
Santa Clara, CA
Tel: 408-961-6444
Fax: 408-961-6445

Toronto
Mississauga, Ontario,
Canada
Tel: 905-673-0699
Fax: 905-673-6509

ASIA/PACIFIC

Asia Pacific Office
Suites 3707-14, 37th Floor
Tower 6, The Gateway
Harbour City, Kowloon
Hong Kong
Tel: 852-2401-1200
Fax: 852-2401-3431

Australia - Sydney
Tel: 61-2-9868-6733
Fax: 61-2-9868-6755

China - Beijing
Tel: 86-10-8569-7000
Fax: 86-10-8528-2104

China - Chengdu
Tel: 86-28-8665-5511
Fax: 86-28-8665-7889

China - Chongqing
Tel: 86-23-8980-9588
Fax: 86-23-8980-9500

China - Hangzhou
Tel: 86-571-2819-3187
Fax: 86-571-2819-3189

China - Hong Kong SAR
Tel: 852-2943-5100
Fax: 852-2401-3431

China - Nanjing
Tel: 86-25-8473-2460
Fax: 86-25-8473-2470

China - Qingdao
Tel: 86-532-8502-7355
Fax: 86-532-8502-7205

China - Shanghai
Tel: 86-21-5407-5533
Fax: 86-21-5407-5066

China - Shenyang
Tel: 86-24-2334-2829
Fax: 86-24-2334-2393

China - Shenzhen
Tel: 86-755-8864-2200
Fax: 86-755-8203-1760

China - Wuhan
Tel: 86-27-5980-5300
Fax: 86-27-5980-5118

China - Xian
Tel: 86-29-8833-7252
Fax: 86-29-8833-7256

China - Xiamen
Tel: 86-592-2388138
Fax: 86-592-2388130

China - Zhuhai
Tel: 86-756-3210040
Fax: 86-756-3210049

ASIA/PACIFIC

India - Bangalore
Tel: 91-80-3090-4444
Fax: 91-80-3090-4123

India - New Delhi
Tel: 91-11-4160-8631
Fax: 91-11-4160-8632

India - Pune
Tel: 91-20-2566-1512
Fax: 91-20-2566-1513

Japan - Osaka
Tel: 81-6-6152-7160
Fax: 81-6-6152-9310

Japan - Tokyo
Tel: 81-3-6880- 3770
Fax: 81-3-6880-3771

Korea - Daegu
Tel: 82-53-744-4301
Fax: 82-53-744-4302

Korea - Seoul
Tel: 82-2-554-7200
Fax: 82-2-558-5932 or
82-2-558-5934

Malaysia - Kuala Lumpur
Tel: 60-3-6201-9857
Fax: 60-3-6201-9859

Malaysia - Penang
Tel: 60-4-227-8870
Fax: 60-4-227-4068

Philippines - Manila
Tel: 63-2-634-9065
Fax: 63-2-634-9069

Singapore
Tel: 65-6334-8870
Fax: 65-6334-8850

Taiwan - Hsin Chu
Tel: 886-3-5778-366
Fax: 886-3-5770-955

Taiwan - Kaohsiung
Tel: 886-7-213-7828
Fax: 886-7-330-9305

Taiwan - Taipei
Tel: 886-2-2508-8600
Fax: 886-2-2508-0102

Thailand - Bangkok
Tel: 66-2-694-1351
Fax: 66-2-694-1350

EUROPE

Austria - Wels
Tel: 43-7242-2244-39
Fax: 43-7242-2244-393

Denmark - Copenhagen
Tel: 45-4450-2828
Fax: 45-4485-2829

France - Paris
Tel: 33-1-69-53-63-20
Fax: 33-1-69-30-90-79

Germany - Munich
Tel: 49-89-627-144-0
Fax: 49-89-627-144-44

Italy - Milan
Tel: 39-0331-742611
Fax: 39-0331-466781

Netherlands - Drunen
Tel: 31-416-690399
Fax: 31-416-690340

Spain - Madrid
Tel: 34-91-708-08-90
Fax: 34-91-708-08-91

UK - Wokingham
Tel: 44-118-921-5869
Fax: 44-118-921-5820

11/29/12

© 2001-2012 Microchip Technology Inc.