24AA512/24LC512/24FC512

512K I²C™ Serial EEPROM

Device Selection Table

Part Number	Vcc Range	Max. Clock Frequency	Temp. Ranges
24AA512	1.7-5.5V	400 kHz(1)	I
24LC512	2.5-5.5V	400 kHz	I, E
24FC512	1.7-5.5V	1 MHz(2)	I

Note 1: 100 kHz for VCC < 2.5V

2: 400 kHz for VCC < 2.5V

Features:

- Single Supply with Operation down to 1.7V for 24AA512 and 24FC512 Devices, 2.5V for 24LC512 Devices
- Low-Power CMOS Technology:
  - Active current 400 uA, typical
  - Standby current 100 nA, typical
- 2-Wire Serial Interface, I²C™ Compatible
- Cascadable for up to Eight Devices
- Schmitt Trigger Inputs for Noise Suppression
- Output Slope Control to Eliminate Ground Bounce
- 100 kHz and 400 kHz Clock Compatibility
- Page Write Time 5 ms max.
- Self-Timed Erase/Write Cycle
- 128-Byte Page Write Buffer
- Hardware Write-Protect
- ESD Protection >4000V
- More than 1 Million Erase/Write Cycles
- Data Retention > 200 years
- Packages Include 8-lead PDIP, SOIJ, SOIC, TSSOP, DFN, Chip Scale and 14-lead TSSOP
- Pb-Free and RoHS Compliant
- Temperature Ranges:
  - Industrial (I): -40°C to +85°C
  - Automotive (E):-40°C to +125°C

Description:

The Microchip Technology Inc. 24AA512/24LC512/24FC512 (24XX512*) is a 64K x 8 (512 Kbit) Serial Electrically Erasable PROM, capable of operation across a broad voltage range (1.7V to 5.5V). It has been developed for advanced, low-power applications such as personal communications and data acquisition. This device also has a page write capability of up to 128 bytes of data. This device is capable of both random and sequential reads up to the 512K boundary. Functional address lines allow up to eight devices on the same bus, for up to 4 Mbit address space. This device is available in the standard 8-pin plastic DIP, SOIJ, SOIC, TSSOP, DFN, and 14-lead TSSOP packages. The 24AA512 is also available in the 8-lead Chip Scale package.

Block Diagram

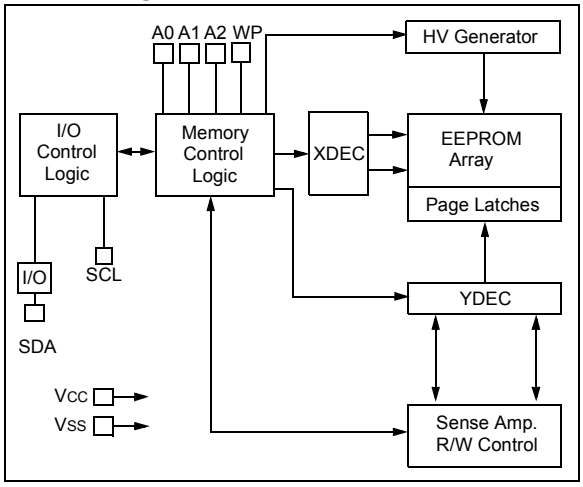

Package Type

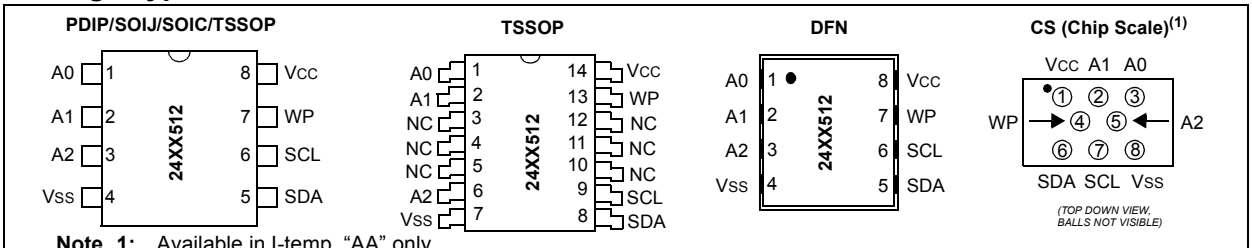

Note 1: Available in I-temp, "AA" only.

* 24XX512 is used in this document as a generic part number for the 24AA512/24LC512/24FC512 devices.

© 2010 Microchip Technology Inc.

1.0 ELECTRICAL CHARACTERISTICS

Absolute Maximum Ratings (†)

VCC.....6.5V

All inputs and outputs w.r.t. VSS ..... -0.6V to VCC +1.0V

Storage temperature .....-65°C to +150°C

Ambient temperature with power applied .....-40°C to +125°C

ESD protection on all pins .....≥ 4 kV

† NOTICE**:** Stresses above those listed under “Absolute Maximum Ratings” may cause permanent damage to the device. This is a stress rating only and functional operation of the device at those or any other conditions above those indicated in the operational listings of this specification is not implied. Exposure to maximum rating conditions for extended periods may affect device reliability.

TABLE 1-1: DC CHARACTERISTICS

DC CHARACTERISTICS			**Electrical Characteristics:** Industrial (I): VCC = +1.7V to 5.5V TA = -40°C to +85°C Automotive (E): VCC = +2.5V to 5.5V TA = -40°C to +125°C			
Param. No.	**Sym.**	**Characteristic**	**Min.**	**Max.**	**Units**	**Conditions**
D1	—	A0, A1, A2, SCL, SDA and WP pins:	—	—	—	—
D2	VIH	High-level input voltage	0.7 VCC	—	V	—
D3	VIL	Low-level input voltage	—	0.3 VCC 0.2 VCC	V V	VCC ≥ 2.5V VCC < 2.5V
D4	VHYS	Hysteresis of Schmitt Trigger inputs (SDA, SCL pins)	0.05 VCC	—	V	VCC ≥ 2.5V **(Note)**
D5	VOL	Low-level output voltage	—	0.40	V	IOL = 3.0 ma @ VCC = 4.5V IOL = 2.1 ma @ VCC = 2.5V
D6	ILI	Input leakage current	—	±1	µA	VIN = VSS or VCC, WP = VSS VIN = VSS or VCC, WP = VCC
D7	ILO	Output leakage current	—	±1	µA	VOUT = VSS or VCC
D8	CIN, COUT	Pin capacitance (all inputs/outputs)	—	10	pF	VCC = 5.0V **(Note)** TA = 25°C, FCLK = 1 MHz
D9	ICC Read	Operating current	—	400	µA	VCC = 5.5V, SCL = 400 kHz
	ICC Write		—	5	mA	VCC = 5.5V
D10	ICCS	Standby current	— —	1 5	µA µA	TA = -40°C to +85°C SCL = SDA = VCC = 5.5V A0, A1, A2, WP = VSS TA = -40°C to +125°C SCL = SDA = VCC = 5.5V A0, A1, A2, WP = VSS

Note: This parameter is periodically sampled and not 100% tested.

© 2010 Microchip Technology Inc.

TABLE 1-2: AC CHARACTERISTICS

AC CHARACTERISTICS			Electrical Characteristics: Industrial (I): VCC = +1.7V to 5.5V TA = -40°C to +85°C Automotive (E): VCC = +2.5V to 5.5V TA = -40°C to +125°C			
Param. No.	**Sym.**	**Characteristic**	**Min.**	**Max.**	**Units**	**Conditions**
1	FCLK	Clock frequency	— — — —	100 400 400 1000	kHz	1.7V ≤ VCC < 2.5V 2.5V ≤ VCC ≤ 5.5V 1.7V ≤ VCC < 2.5V 24FC512 2.5V ≤ VCC ≤ 5.5V 24FC512
2	THIGH	Clock high time	4000 600 600 500	— — — —	ns	1.7V ≤ VCC < 2.5V 2.5V ≤ VCC ≤ 5.5V 1.7V ≤ VCC < 2.5V 24FC512 2.5V ≤ VCC ≤ 5.5V 24FC512
3	TLOW	Clock low time	4700 1300 1300 500	— — — —	ns	1.7V ≤ VCC < 2.5V 2.5V ≤ VCC ≤ 5.5V 1.7V ≤ VCC < 2.5V 24FC512 2.5V ≤ VCC ≤ 5.5V 24FC512
4	TR	SDA and SCL rise time **(Note 1)**	— — —	1000 300 300	ns	1.7V ≤ VCC< 2.5V 2.5V ≤ VCC ≤ 5.5V 1.7V ≤ VCC ≤ 5.5V 24FC512
5	TF	SDA and SCL fall time **(Note 1)**	— —	300 100	ns	All except, 24FC512 1.7V ≤ VCC ≤ 5.5V 24FC512
6	THD:STA	Start condition hold time	4000 600 600 250	— — — —	ns	1.7V ≤ VCC < 2.5V 2.5V ≤ VCC ≤ 5.5V 1.7V ≤ VCC < 2.5V 24FC512 2.5V ≤ VCC ≤ 5.5V 24FC512
7	TSU:STA	Start condition setup time	4700 600 600 250	— — — —	ns	1.7V ≤ VCC < 2.5V 2.5V ≤ VCC ≤ 5.5V 1.7V ≤ VCC < 2.5V 24FC512 2.5V ≤ VCC ≤ 5.5V 24FC512
8	THD:DAT	Data input hold time	0	—	ns	**(Note 2)**
9	TSU:DAT	Data input setup time	250 100 100	— — —	ns	1.7V ≤ VCC < 2.5V 2.5V ≤ VCC ≤ 5.5V 1.7V ≤ VCC ≤ 5.5V 24FC512
10	TSU:STO	Stop condition setup time	4000 600 600 250	— — — —	ns	1.7V ≤ VCC < 2.5V 2.5V ≤ VCC ≤ 5.5V 1.7V ≤ VCC < 2.5V 24FC512 2.5V ≤ VCC ≤ 5.5V 24FC512
11	TSU:WP	WP setup time	4000 600 600	— — —	ns	1.7V ≤ VCC < 2.5V 2.5V ≤ VCC ≤ 5.5V 1.7V ≤ VCC ≤ 5.5V 24FC512
12	THD:WP	WP hold time	4700 1300 1300	— — —	ns	1.7V ≤ VCC < 2.5V 2.5V ≤ VCC ≤ 5.5V 1.7V ≤ VCC ≤ 5.5V 24FC512
13	TAA	Output valid from clock **(Note 2)**	— — — —	3500 900 900 400	ns	1.7V ≤ VCC < 2.5V 2.5V ≤ VCC ≤ 5.5V 1.7V ≤ VCC < 2.5V 24FC512 2.5V ≤ VCC ≤ 5.5V 24FC512
14	TBUF	Bus free time: Time the bus must be free before a new transmission can start	4700 1300 1300 500	— — — —	ns	1.7V ≤ VCC < 2.5V 2.5V ≤ VCC ≤ 5.5V 1.7V ≤ VCC < 2.5V 24FC512 2.5V ≤ VCC ≤ 5.5V 24FC512

Note 1: Not 100% tested. CB = total capacitance of one bus line in pF.

2: As a transmitter, the device must provide an internal minimum delay time to bridge the undefined region (minimum 300 ns) of the falling edge of SCL to avoid unintended generation of Start or Stop conditions.

3: The combined TSP and VHYS specifications are due to new Schmitt Trigger inputs which provide improved noise spike suppression. This eliminates the need for a TI specification for standard operation.

4: This parameter is not tested but ensured by characterization. For endurance estimates in a specific application, please consult the Total Endurance™ Model which can be obtained from Microchip's web site at www.microchip.com.

AC CHARACTERISTICS (Continued)			Electrical Characteristics: Industrial (I): VCC = +1.7V to 5.5V TA = -40°C to +85°C Automotive (E): VCC = +2.5V to 5.5V TA = -40°C to +125°C			
Param. No.	**Sym.**	**Characteristic**	**Min.**	**Max.**	**Units**	**Conditions**
16	TSP	Input filter spike suppression (SDA and SCL pins)	—	50	ns	All except, 24FC512 **(Notes 1 and 3)**
17	TWC	Write cycle time (byte or page)	—	5	ms	—
18	—	Endurance	1,000,000	—	cycles	Page Mode, 25°C, VCC = 5.5V **(Note 4)**

Note 1: Not 100% tested. CB = total capacitance of one bus line in pF.

2: As a transmitter, the device must provide an internal minimum delay time to bridge the undefined region (minimum 300 ns) of the falling edge of SCL to avoid unintended generation of Start or Stop conditions.

3: The combined TSP and VHYS specifications are due to new Schmitt Trigger inputs which provide improved noise spike suppression. This eliminates the need for a TI specification for standard operation.

4: This parameter is not tested but ensured by characterization. For endurance estimates in a specific application, please consult the Total Endurance™ Model which can be obtained from Microchip's web site at www.microchip.com.

© 2010 Microchip Technology Inc.

FIGURE 1-1: BUS TIMING DATA

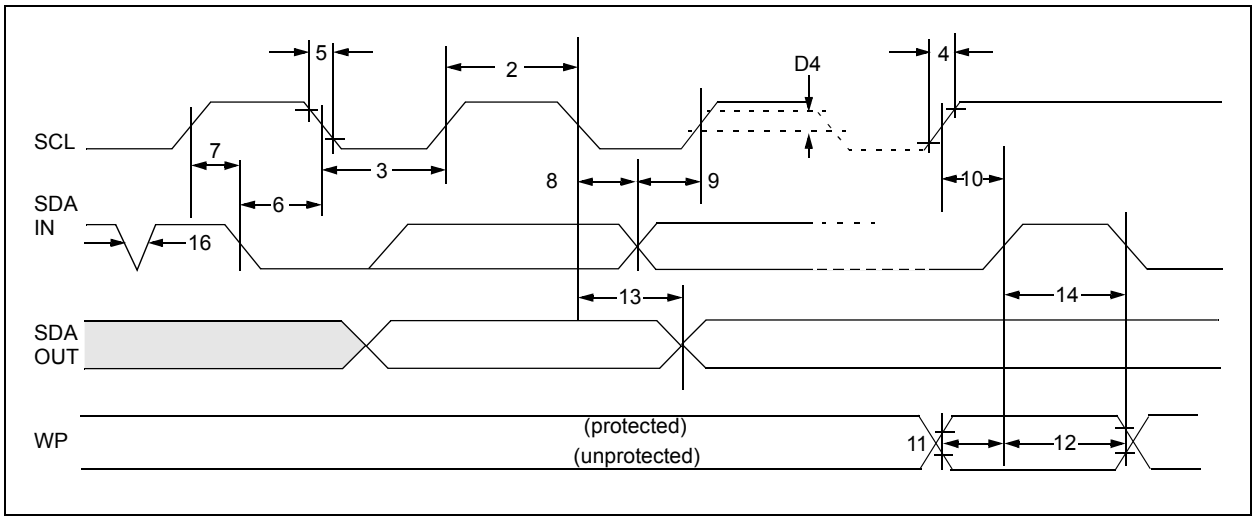

2.0 PIN DESCRIPTIONS

The descriptions of the pins are listed in Table 2-1.

TABLE 2-1: PIN FUNCTION TABLE

Name	PDIP	SOIC	SOIJ	TSSOP	14-lead TSSOP	DFN	CS	Function
A0	1	1	1	1	1	1	3	User Configured Chip Select
A1	2	2	2	2	2	2	2	User Configured Chip Select
(NC)	—	—	—	—	3, 4, 5	—	—	Not Connected
A2	3	3	3	3	6	3	5	User Configured Chip Select
VSS	4	4	4	4	7	4	8	Ground
SDA	5	5	5	5	8	5	6	Serial Data
SCL	6	6	6	6	9	6	7	Serial Clock
(NC)	—	—	—	—	10, 11, 12	—	—	Not Connected
WP	7	7	7	7	13	7	4	Write-Protect Input
VCC	8	8	8	8	14	8	1	+1.7V to 5.5V (24AA512) +2.5V to 5.5V (24LC512) +1.7V to 5.5V (24FC512)

2.1 A0, A1 and A2 Chip Address Inputs

The A0, A1 and A2 inputs are used by the 24XX512 for multiple device operations. The logic levels on these inputs are compared with the corresponding bits in the slave address. The chip is selected if the compare is true.

Up to eight devices may be connected to the same bus by using different Chip Select bit combinations. These inputs must be connected to either VCC or VSS.

In most applications, the chip address inputs A0, A1 and A2 are hard-wired to logic '0' or logic '1'. For applications in which these pins are controlled by a microcontroller or other programmable logic device, the chip address pins must be driven to logic '0' or logic '1' before normal device operation can proceed.

2.2 Serial Data (SDA)

This is a bidirectional pin used to transfer addresses and data into and data out of the device. It is an open-drain terminal, therefore, the SDA bus requires a pull-up resistor to VCC (typical 10 kΩ for 100 kHz, 2 kΩ for 400 kHz and 1 MHz).

For normal data transfer, SDA is allowed to change only during SCL low. Changes during SCL high are reserved for indicating the Start and Stop conditions.

2.3 Serial Clock (SCL)

This input is used to synchronize the data transfer from and to the device.

2.4 Write-Protect (WP)

This pin must be connected to either VSS or VCC. If tied to VSS, write operations are enabled. If tied to VCC, write operations are inhibited but read operations are not affected.

3.0 FUNCTIONAL DESCRIPTION

The 24XX512 supports a bidirectional 2-wire bus and data transmission protocol. A device that sends data onto the bus is defined as a transmitter and a device receiving data as a receiver. The bus must be controlled by a master device which generates the Serial Clock (SCL), controls the bus access and generates the Start and Stop conditions, while the 24XX512 works as a slave. Both master and slave can operate as a transmitter or receiver, but the master device determines which mode is activated.

© 2010 Microchip Technology Inc.

4.0 BUS CHARACTERISTICS

The following **bus protocol** has been defined:

- Data transfer may be initiated only when the bus is not busy.
- During data transfer, the data line must remain stable whenever the clock line is high. Changes in the data line, while the clock line is high, will be interpreted as a Start or Stop condition.

Accordingly, the following bus conditions have been defined (Figure 4-1).

4.1 Bus Not Busy (A)

Both data and clock lines remain high.

4.2 Start Data Transfer (B)

A high-to-low transition of the SDA line while the clock (SCL) is high determines a Start condition. All commands must be preceded by a Start condition.

4.3 Stop Data Transfer (C)

A low-to-high transition of the SDA line while the clock (SCL) is high determines a Stop condition. All operations must end with a Stop condition.

4.4 Data Valid (D)

The state of the data line represents valid data when, after a Start condition, the data line is stable for the duration of the high period of the clock signal.

The data on the line must be changed during the low period of the clock signal. There is one bit of data per clock pulse.

Each data transfer is initiated with a Start condition and terminated with a Stop condition. The number of the data bytes transferred between the Start and Stop conditions is determined by the master device.

4.5 Acknowledge

Each receiving device, when addressed, is obliged to generate an Acknowledge signal after the reception of each byte. The master device must generate an extra clock pulse which is associated with this Acknowledge bit. See Figure 4-2 for acknowledge timing.

Note:	The 24XX512 does not generate any Acknowledge bits if an internal programming cycle is in progress.

A device that acknowledges must pull down the SDA line during the Acknowledge clock pulse in such a way that the SDA line is stable low during the high period of the acknowledge related clock pulse. Of course, setup and hold times must be taken into account. During reads, a master must signal an end of data to the slave by NOT generating an Acknowledge bit on the last byte that has been clocked out of the slave. In this case, the slave (24XX512) will leave the data line high to enable the master to generate the Stop condition.

FIGURE 4-1: DATA TRANSFER SEQUENCE ON THE SERIAL BUS

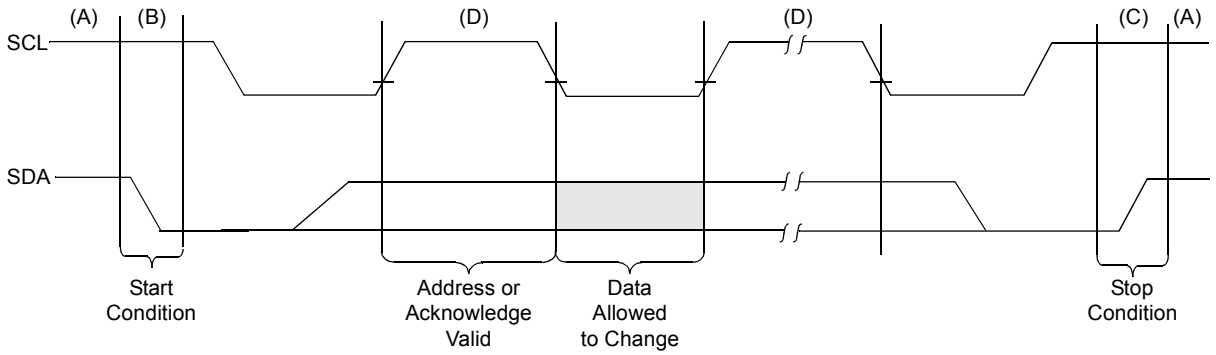

FIGURE 4-2: ACKNOWLEDGE TIMING

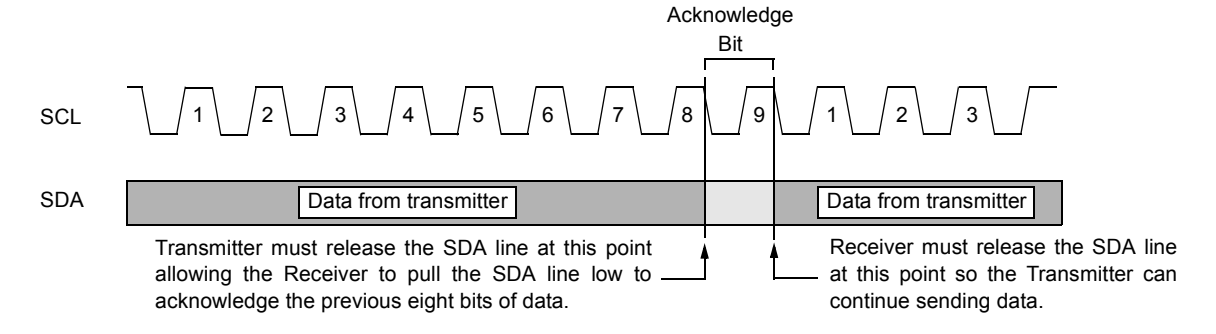

© 2010 Microchip Technology Inc.

5.0 DEVICE ADDRESSING

A control byte is the first byte received following the Start condition from the master device (Figure 5-1). The control byte consists of a 4-bit control code; for the 24XX512 this is set as '1010' binary for read and write operations. The next three bits of the control byte are the Chip Select bits (A2, A1 and A0). The Chip Select bits allow the use of up to eight 24XX512 devices on the same bus and are used to select which device is accessed. The Chip Select bits in the control byte must correspond to the logic levels on the corresponding A2, A1 and A0 pins for the device to respond. These bits are in effect the three Most Significant bits of the word address.

The last bit of the control byte defines the operation to be performed. When set to a one a read operation is selected and when set to a zero a write operation is selected. The next two bytes received define the address of the first data byte (Figure 5-2). Because all A15…A0 are used, there are no upper address bits that are "don't care". The upper address bits are transferred first, followed by the Less Significant bits.

Following the Start condition, the 24XX512 monitors the SDA bus checking the device type identifier being transmitted. Upon receiving a '1010' code and appropriate device select bits, the slave device outputs an Acknowledge signal on the SDA line. Depending on the state of the R/$\overline{W}$ bit, the 24XX512 will select a read or write operation.

FIGURE 5-1: CONTROL BYTE FORMAT

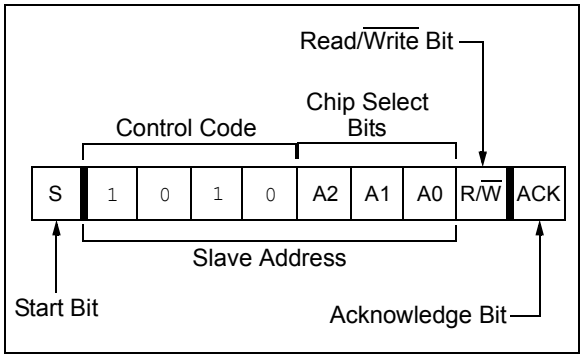

5.1 Contiguous Addressing Across Multiple Devices

The Chip Select bits A2, A1 and A0 can be used to expand the contiguous address space for up to 4 Mbit by adding up to eight 24XX512 devices on the same bus. In this case, software can use A0 of the **control byte** as address bit A16; A1 as address bit A17; and A2 as address bit A18. It is not possible to sequentially read across device boundaries.

FIGURE 5-2: ADDRESS SEQUENCE BIT ASSIGNMENTS

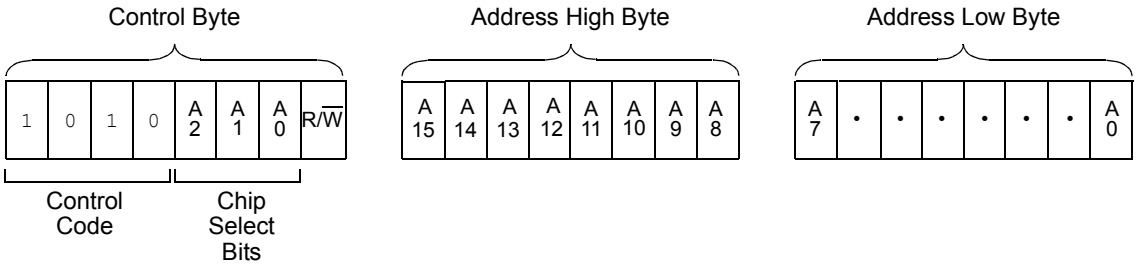

6.0 WRITE OPERATIONS

6.1 Byte Write

Following the Start condition from the master, the control code (four bits), the Chip Select (three bits) and the R/$\overline{W}$ bit (which is a logic low) are clocked onto the bus by the master transmitter. This indicates to the addressed slave receiver that the address high byte will follow after it has generated an Acknowledge bit during the ninth clock cycle. Therefore, the next byte transmitted by the master is the high-order byte of the word address and will be written into the Address Pointer of the 24XX512. The next byte is the Least Significant Address Byte. After receiving another Acknowledge signal from the 24XX512, the master device will transmit the data word to be written into the addressed memory location. The 24XX512 acknowledges again and the master generates a Stop condition. This initiates the internal write cycle and during this time, the 24XX512 will not generate Acknowledge signals (Figure 6-1). If an attempt is made to write to the array with the WP pin held high, the device will acknowledge the command, but no write cycle will occur, no data will be written and the device will immediately accept a new command. After a byte Write command, the internal address counter will point to the address location following the one that was just written.

Note:	When doing a write of less than 128 bytes the data in the rest of the page is refreshed along with the data bytes being written. This will force the entire page to endure a write cycle, for this reason endurance is specified per page.

6.2 Page Write

The write control byte, word address and the first data byte are transmitted to the 24XX512 in the same way as in a byte write. But instead of generating a Stop condition, the master transmits up to 127 additional bytes, which are temporarily stored in the on-chip page buffer and will be written into memory after the master has transmitted a Stop condition. After receipt of each word, the seven lower Address Pointer bits are internally incremented by one. If the master should transmit more than 128 bytes prior to generating the Stop condition, the address counter will roll over and the previously received data will be overwritten. As with the byte write operation, once the Stop condition is received, an internal write cycle will begin (Figure 6-2). If an attempt is made to write to the array with the WP pin held high, the device will acknowledge the command, but no write cycle will occur, no data will be written and the device will immediately accept a new command.

6.3 Write Protection

The WP pin allows the user to write-protect the entire array (0000-FFFF) when the pin is tied to VCC. If tied to VSS the write protection is disabled. The WP pin is sampled at the Stop bit for every Write command (Figure 1-1). Toggling the WP pin after the Stop bit will have no effect on the execution of the write cycle.

Note:	Page write operations are limited to writing bytes within a single physical page, **regardless** of the number of bytes actually being written. Physical page boundaries start at addresses that are integer multiples of the page buffer size (or 'page size') and end at addresses that are integer multiples of [page size – 1]. If a Page Write command attempts to write across a physical page boundary, the result is that the data wraps around to the beginning of the current page (overwriting data previously stored there), instead of being written to the next page as might be expected. It is therefore necessary for the application software to prevent page write operations that would attempt to cross a page boundary.

© 2010 Microchip Technology Inc.

FIGURE 6-1: BYTE WRITE

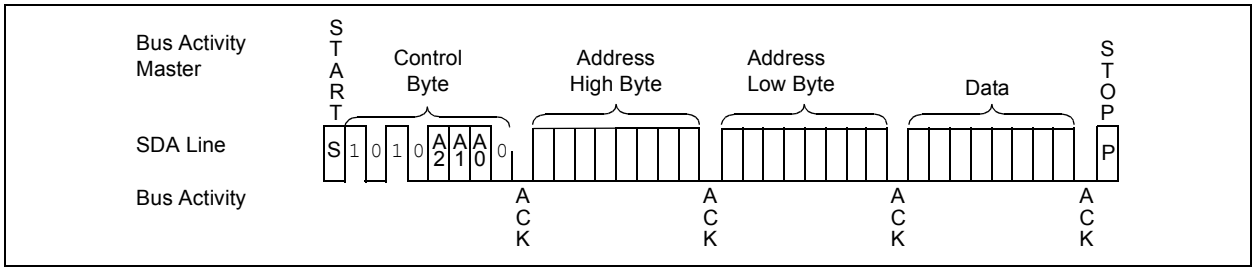

FIGURE 6-2: PAGE WRITE

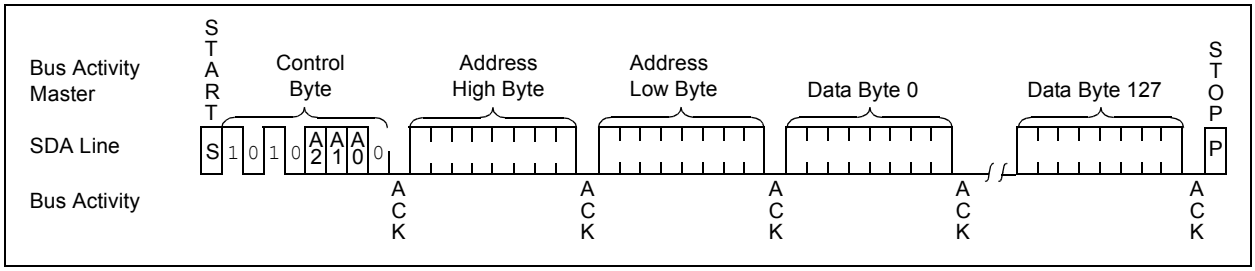

7.0 ACKNOWLEDGE POLLING

Since the device will not acknowledge during a write cycle, this can be used to determine when the cycle is complete (this feature can be used to maximize bus throughput). Once the Stop condition for a Write command has been issued from the master, the device initiates the internally timed write cycle. ACK polling can be initiated immediately. This involves the master sending a Start condition, followed by the control byte for a Write command (R/$\overline{W}$ = 0). If the device is still busy with the write cycle, then no ACK will be returned. If no ACK is returned, then the Start bit and control byte must be re-sent. If the cycle is complete, then the device will return the ACK and the master can then proceed with the next Read or Write command. See Figure 7-1 for flow diagram.

FIGURE 7-1: ACKNOWLEDGE POLLING FLOW

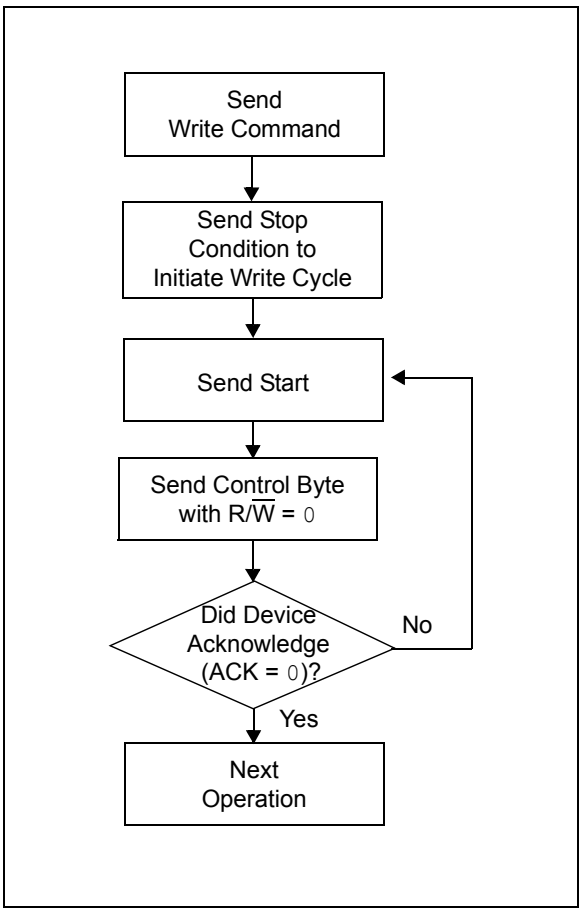

© 2010 Microchip Technology Inc.

8.0 READ OPERATION

Read operations are initiated in the same way as write operations with the exception that the R/$\overline{W}$ bit of the control byte is set to '1'. There are three basic types of read operations: current address read, random read and sequential read.

8.1 Current Address Read

The 24XX512 contains an address counter that maintains the address of the last word accessed, internally incremented by '1'. Therefore, if the previous read access was to address 'n' (n is any legal address), the next current address read operation would access data from address n + 1.

Upon receipt of the control byte with R/$\overline{W}$ bit set to '1', the 24XX512 issues an acknowledge and transmits the 8-bit data word. The master will not acknowledge the transfer but does generate a Stop condition and the 24XX512 discontinues transmission (Figure 8-1).

FIGURE 8-1: CURRENT ADDRESS READ

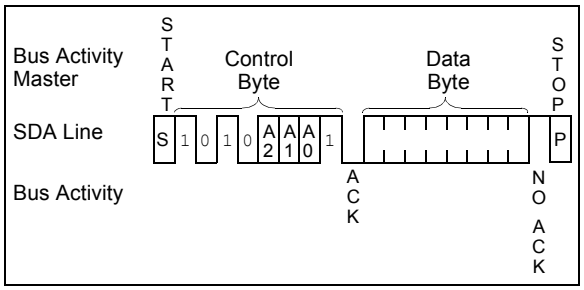

8.2 Random Read

Random read operations allow the master to access any memory location in a random manner. To perform this type of read operation, first the word address must be set. This is done by sending the word address to the 24XX512 as part of a write operation (R/$\overline{W}$ bit set to '0'). After the word address is sent, the master generates a Start condition following the acknowledge. This terminates the write operation, but not before the internal Address Pointer is set. Then, the master issues the control byte again but with the R/$\overline{W}$ bit set to a one. The 24XX512 will then issue an acknowledge and transmit the 8-bit data word. The master will not acknowledge the transfer but does generate a Stop condition which causes the 24XX512 to discontinue transmission (Figure 8-2). After a random Read command, the internal address counter will point to the address location following the one that was just read.

8.3 Sequential Read

Sequential reads are initiated in the same way as a random read except that after the 24XX512 transmits the first data byte, the master issues an acknowledge as opposed to the Stop condition used in a random read. This acknowledge directs the 24XX512 to transmit the next sequentially addressed 8-bit word (Figure 8-3). Following the final byte transmitted to the master, the master will NOT generate an acknowledge, but will generate a Stop condition. To provide sequential reads, the 24XX512 contains an internal Address Pointer which is incremented by one at the completion of each operation. This Address Pointer allows the entire memory contents to be serially read during one operation. The internal Address Pointer will automatically roll over from address FFFF to address 0000 if the master acknowledges the byte received from the array address FFFF.

FIGURE 8-2: RANDOM READ

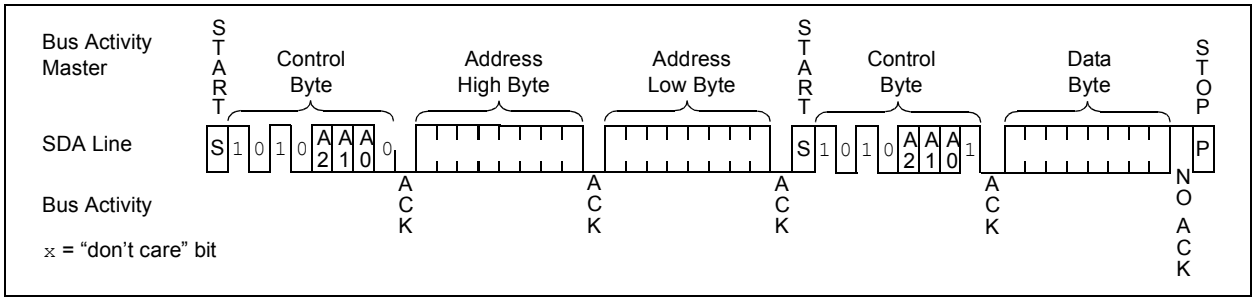

FIGURE 8-3: SEQUENTIAL READ

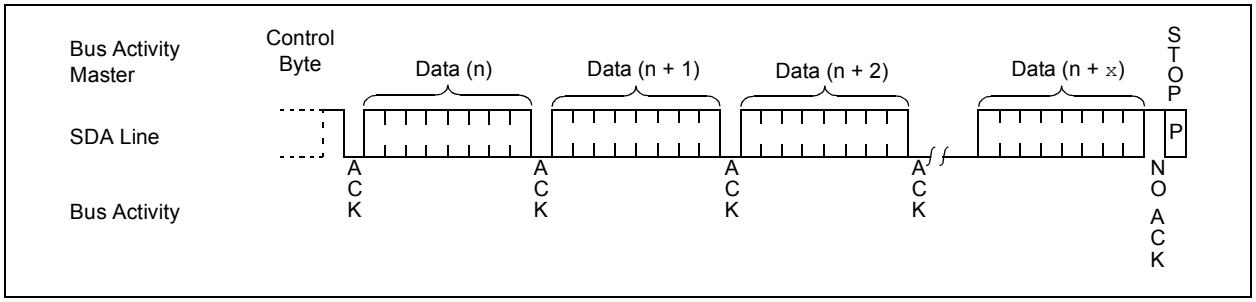

© 2010 Microchip Technology Inc.

9.0 PACKAGING INFORMATION

9.1 Package Marking Information

8-Lead PDIP (300 mil)

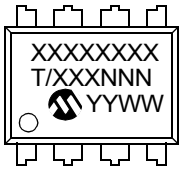

Example:

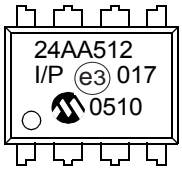

8-Lead SOIJ (5.28 mm)

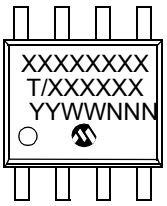

Example:

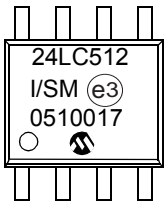

8-Lead DFN-S



Example:

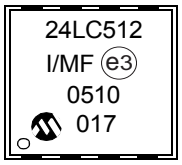

Legend:	XX...X	Customer-specific information*
	Y	Year code (last digit of calendar year)
	YY	Year code (last 2 digits of calendar year)
	WW	Week code (week of January 1 is week ‘01’)
	NNN	Alphanumeric traceability code
	(e3)	Pb-free JEDEC designator for Matte Tin (Sn)
	*	This package is Pb-free. The Pb-free JEDEC designator ((e3)) can be found on the outer packaging for this package.
	T	Temperature
	Blank	Commercial
	I	Industrial
	E	Extended

Note: In the event the full Microchip part number cannot be marked on one line, it will be carried over to the next line, thus limiting the number of available characters for customer-specific information.

*****Standard device marking consists of Microchip part number, year code, week code, and traceability code. For device marking beyond this, certain price adders apply. Please check with your Microchip Sales Office.

Package Marking Information (Continued)

8-Lead SOIC (3.90 mm)

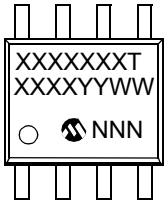

Example:

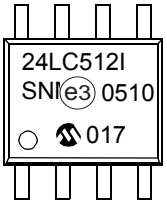

8-Lead TSSOP

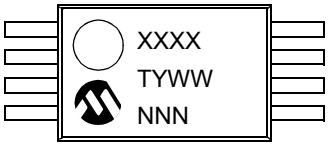

Example

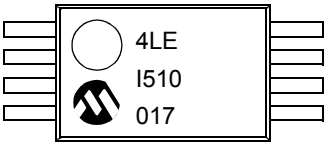

14-Lead TSSOP

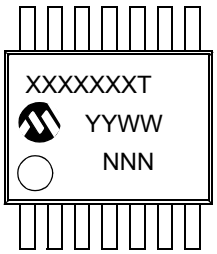

Example

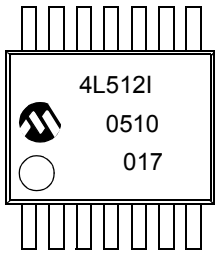

8-Lead Chip Scale

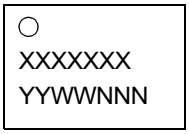

Example:



	First Line Marking Codes
Part No.	**8- Lead TSSOP Package Codes**
24AA512	4AE
24LC512	4LE
24FC512	4FE

© 2010 Microchip Technology Inc.

8-Lead Plastic Dual In-Line (P) – 300 mil Body [PDIP]

Note: For the most current package drawings, please see the Microchip Packaging Specification located at http://www.microchip.com/packaging

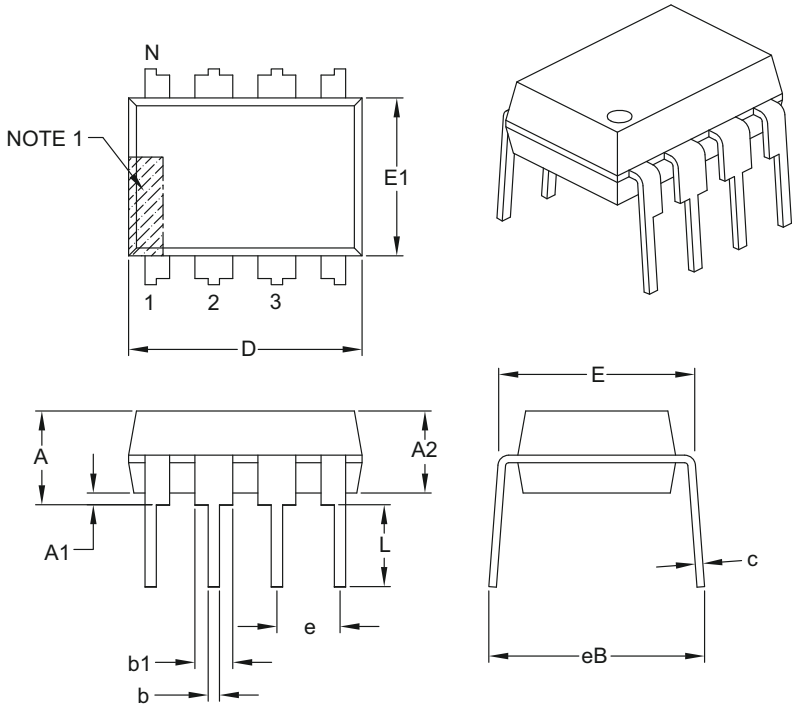

Units		INCHES		
Dimension Limits		MIN	NOM	MAX
Number of Pins	N		8	
Pitch	e		.100 BSC	
Top to Seating Plane	A	–	–	.210
Molded Package Thickness	A2	.115	.130	.195
Base to Seating Plane	A1	.015	–	–
Shoulder to Shoulder Width	E	.290	.310	.325
Molded Package Width	E1	.240	.250	.280
Overall Length	D	.348	.365	.400
Tip to Seating Plane	L	.115	.130	.150
Lead Thickness	c	.008	.010	.015
Upper Lead Width	b1	.040	.060	.070
Lower Lead Width	b	.014	.018	.022
Overall Row Spacing §	eB	–	–	.430

Notes:

1. Pin 1 visual index feature may vary, but must be located with the hatched area.
2. § Significant Characteristic.
3. Dimensions D and E1 do not include mold flash or protrusions. Mold flash or protrusions shall not exceed .010" per side.
4. Dimensioning and tolerancing per ASME Y14.5M.

   BSC: Basic Dimension. Theoretically exact value shown without tolerances.

Microchip Technology Drawing C04-018B

8-Lead Plastic Small Outline (SN) – Narrow, 3.90 mm Body [SOIC]

Note: For the most current package drawings, please see the Microchip Packaging Specification located at http://www.microchip.com/packaging

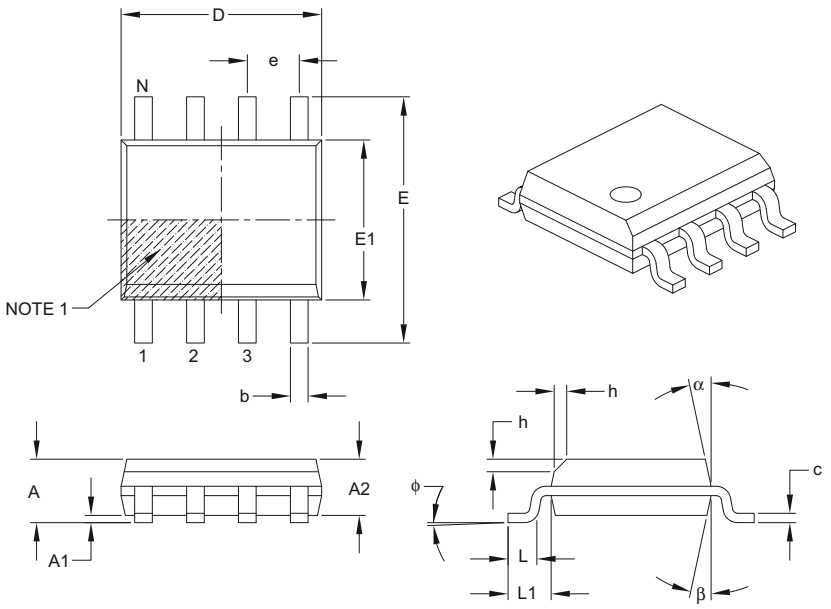

Units		MILLIMETERS		
Dimension Limits		MIN	NOM	MAX
Number of Pins	N		8	
Pitch	e		1.27 BSC	
Overall Height	A	–	–	1.75
Molded Package Thickness	A2	1.25	–	–
Standoff §	A1	0.10	–	0.25
Overall Width	E		6.00 BSC	
Molded Package Width	E1		3.90 BSC	
Overall Length	D		4.90 BSC	
Chamfer (optional)	h	0.25	–	0.50
Foot Length	L	0.40	–	1.27
Footprint	L1		1.04 REF	
Foot Angle	φ	0°	–	8°
Lead Thickness	c	0.17	–	0.25
Lead Width	b	0.31	–	0.51
Mold Draft Angle Top	α	5°	–	15°
Mold Draft Angle Bottom	β	5°	–	15°

Notes:

1. Pin 1 visual index feature may vary, but must be located within the hatched area.
2. § Significant Characteristic.
3. Dimensions D and E1 do not include mold flash or protrusions. Mold flash or protrusions shall not exceed 0.15 mm per side.
4. Dimensioning and tolerancing per ASME Y14.5M.

BSC: Basic Dimension. Theoretically exact value shown without tolerances.
REF: Reference Dimension, usually without tolerance, for information purposes only.

Microchip Technology Drawing C04-057B

© 2010 Microchip Technology Inc.

8-Lead Plastic Small Outline (SN) – Narrow, 3.90 mm Body [SOIC]

Note: For the most current package drawings, please see the Microchip Packaging Specification located at http://www.microchip.com/packaging

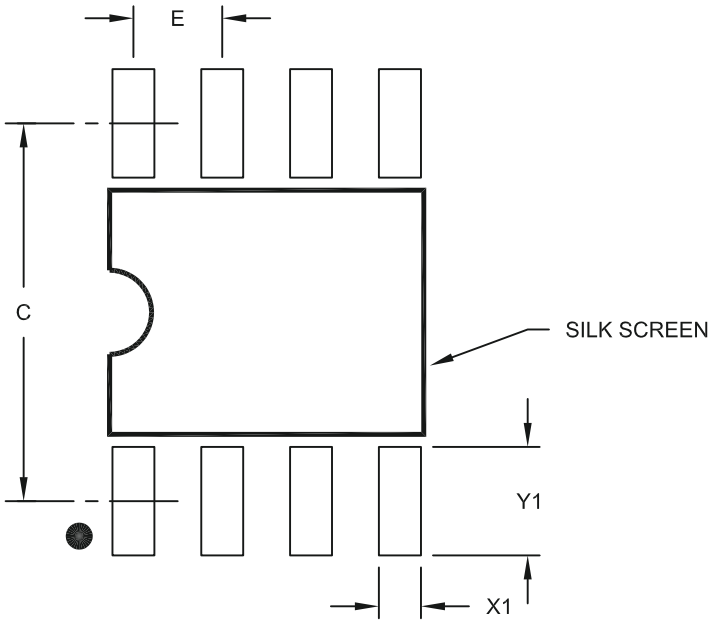

RECOMMENDED LAND PATTERN

Units		MILLIMETERS		
Dimension Limits		MIN	NOM	MAX
Contact Pitch	E		1.27 BSC	
Contact Pad Spacing	C		5.40	
Contact Pad Width (X8)	X1			0.60
Contact Pad Length (X8)	Y1			1.55

Notes:

1. Dimensioning and tolerancing per ASME Y14.5M

BSC: Basic Dimension. Theoretically exact value shown without tolerances.

Microchip Technology Drawing No. C04-2057A

8-Lead Plastic Small Outline (SM) – Medium, 5.28 mm Body [SOIJ]

Note: For the most current package drawings, please see the Microchip Packaging Specification located at http://www.microchip.com/packaging

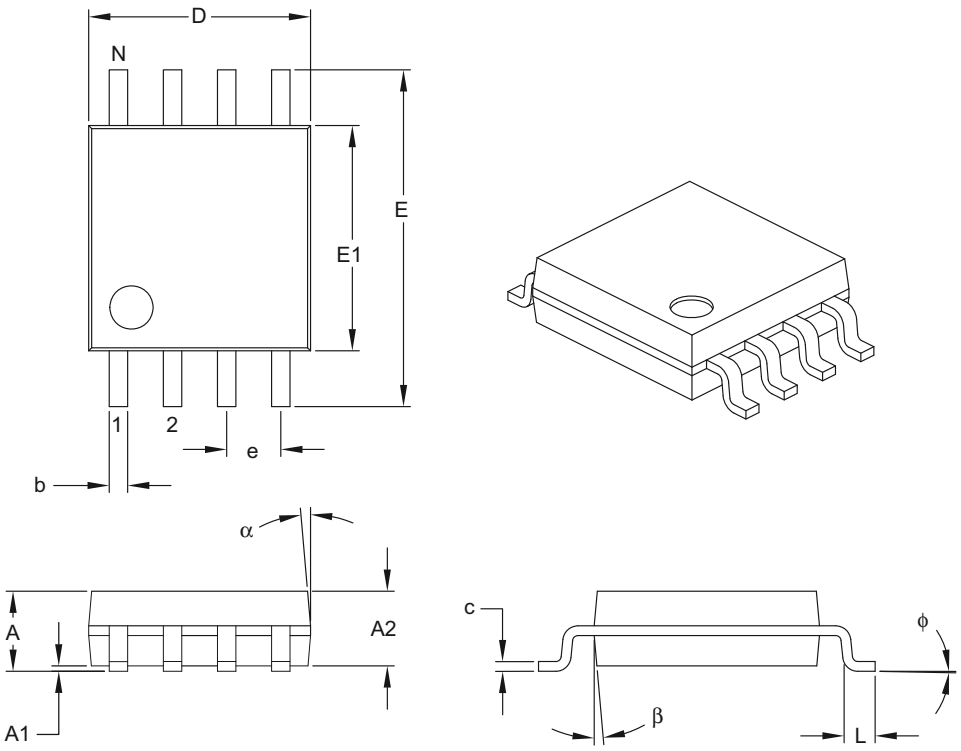

Units		MILLIMETERS		
Dimension Limits		MIN	NOM	MAX
Number of Pins	N		8	
Pitch	e		1.27 BSC	
Overall Height	A	1.77	–	2.03
Molded Package Thickness	A2	1.75	–	1.98
Standoff §	A1	0.05	–	0.25
Overall Width	E	7.62	–	8.26
Molded Package Width	E1	5.11	–	5.38
Overall Length	D	5.13	–	5.33
Foot Length	L	0.51	–	0.76
Foot Angle	ϕ	0°	–	8°
Lead Thickness	c	0.15	–	0.25
Lead Width	b	0.36	–	0.51
Mold Draft Angle Top	α	–	–	15°
Mold Draft Angle Bottom	β	–	–	15°

Notes:

1. SOIJ, JEITA/EIAJ Standard, formerly called SOIC.
2. § Significant Characteristic.
3. Dimensions D and E1 do not include mold flash or protrusions. Mold flash or protrusions shall not exceed 0.25 mm per side.

Microchip Technology Drawing C04-056B

© 2010 Microchip Technology Inc.

8-Lead Plastic Small Outline (SM) - Medium, 5.28 mm Body [SOIJ]

Note: For the most current package drawings, please see the Microchip Packaging Specification located at http://www.microchip.com/packaging

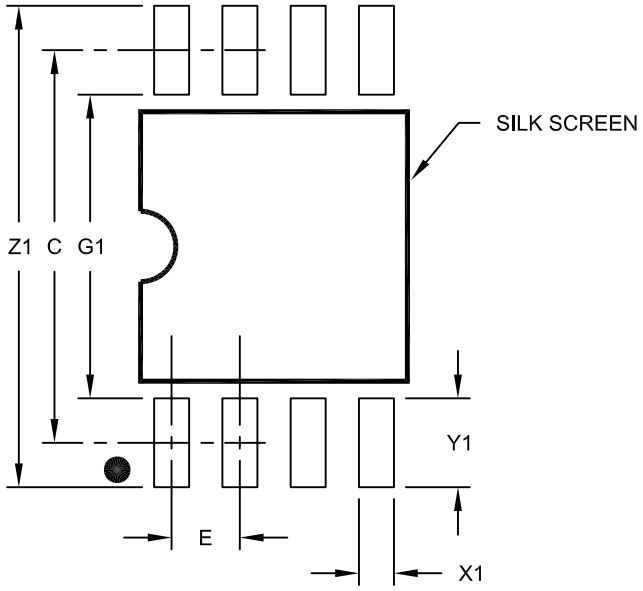

RECOMMENDED LAND PATTERN

Units		MILLIMETERS		
Dimension Limits		MIN	NOM	MAX
Contact Pitch	E		1.27 BSC	
Overall Width	Z1			9.00
Contact Pad Spacing	C1		7.30	
Contact Pad Width (X28)	X1			0.65
Contact Pad Length (X28)	Y1			1.70
Distance Between Pads	G1	5.60		
Distance Between Pads	G	0.62		

Notes:

1. Dimensioning and tolerancing per ASME Y14.5M

BSC: Basic Dimension. Theoretically exact value shown without tolerances.

Microchip Technology Drawing No. C04-2056B

8-Lead Plastic Thin Shrink Small Outline (ST) – 4.4 mm Body [TSSOP]

Note: For the most current package drawings, please see the Microchip Packaging Specification located at http://www.microchip.com/packaging

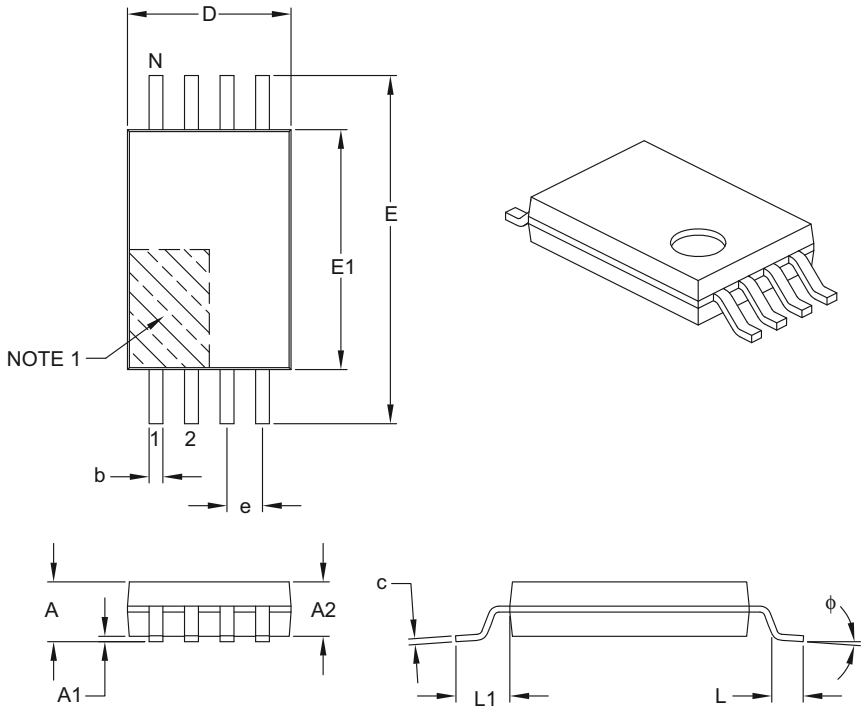

Units		MILLIMETERS		
Dimension Limits		MIN	NOM	MAX
Number of Pins	N		8	
Pitch	e		0.65 BSC	
Overall Height	A	–	–	1.20
Molded Package Thickness	A2	0.80	1.00	1.05
Standoff	A1	0.05	–	0.15
Overall Width	E		6.40 BSC	
Molded Package Width	E1	4.30	4.40	4.50
Molded Package Length	D	2.90	3.00	3.10
Foot Length	L	0.45	0.60	0.75
Footprint	L1		1.00 REF	
Foot Angle	ϕ	0°	–	8°
Lead Thickness	c	0.09	–	0.20
Lead Width	b	0.19	–	0.30

Notes:

1. Pin 1 visual index feature may vary, but must be located within the hatched area.
2. Dimensions D and E1 do not include mold flash or protrusions. Mold flash or protrusions shall not exceed 0.15 mm per side.
3. Dimensioning and tolerancing per ASME Y14.5M.

BSC: Basic Dimension. Theoretically exact value shown without tolerances.
REF: Reference Dimension, usually without tolerance, for information purposes only.

Microchip Technology Drawing C04-086B

© 2010 Microchip Technology Inc.

14-Lead Plastic Thin Shrink Small Outline (ST) – 4.4 mm Body [TSSOP]

Note: For the most current package drawings, please see the Microchip Packaging Specification located at http://www.microchip.com/packaging

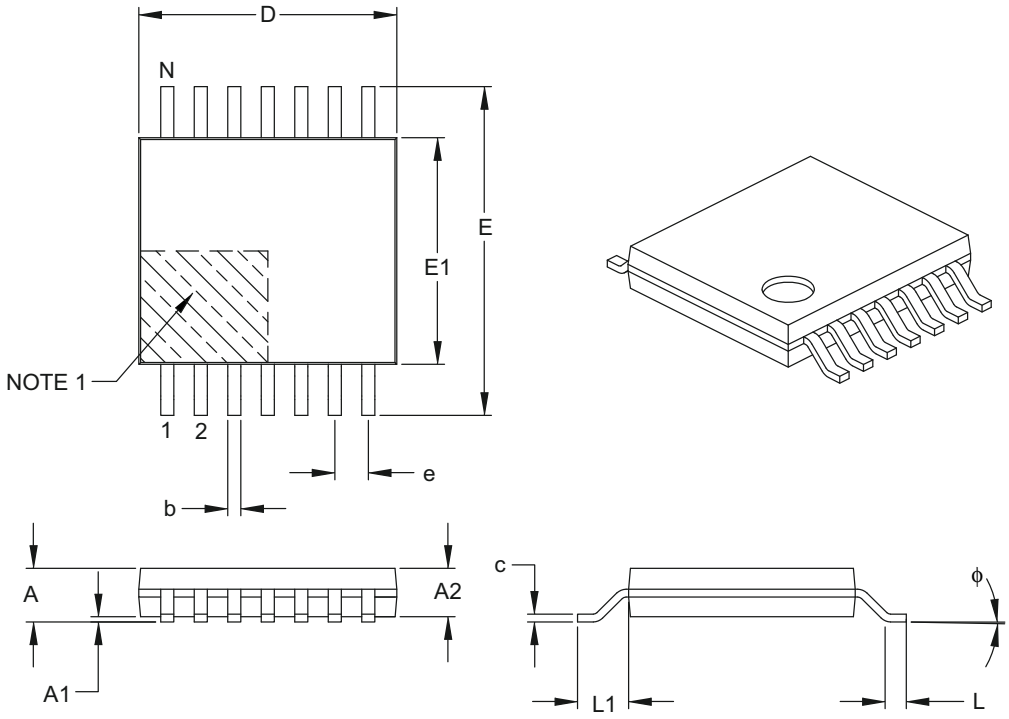

Units		MILLIMETERS		
Dimension Limits		MIN	NOM	MAX
Number of Pins	N		14	
Pitch	e		0.65 BSC	
Overall Height	A	–	–	1.20
Molded Package Thickness	A2	0.80	1.00	1.05
Standoff	A1	0.05	–	0.15
Overall Width	E		6.40 BSC	
Molded Package Width	E1	4.30	4.40	4.50
Molded Package Length	D	4.90	5.00	5.10
Foot Length	L	0.45	0.60	0.75
Footprint	L1		1.00 REF	
Foot Angle	ϕ	0°	–	8°
Lead Thickness	c	0.09	–	0.20
Lead Width	b	0.19	–	0.30

Notes:

1. Pin 1 visual index feature may vary, but must be located within the hatched area.
2. Dimensions D and E1 do not include mold flash or protrusions. Mold flash or protrusions shall not exceed 0.15 mm per side.
3. Dimensioning and tolerancing per ASME Y14.5M.

BSC: Basic Dimension. Theoretically exact value shown without tolerances.
REF: Reference Dimension, usually without tolerance, for information purposes only.

Microchip Technology Drawing C04-087B

8-Lead Plastic Dual Flat, No Lead Package (MF) – 6x5 mm Body [DFN-S]

Note: For the most current package drawings, please see the Microchip Packaging Specification located at http://www.microchip.com/packaging

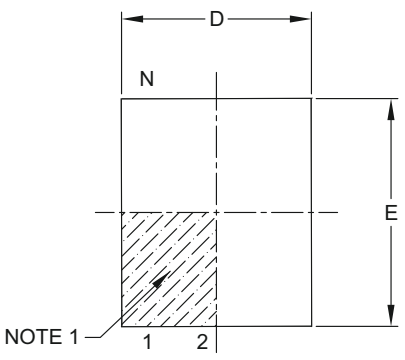

TOP VIEW

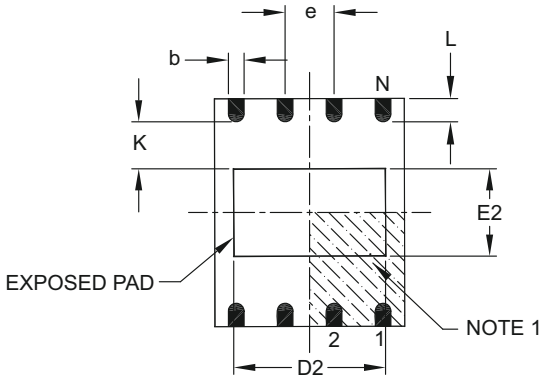

BOTTOM VIEW

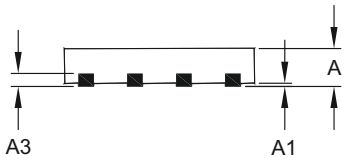

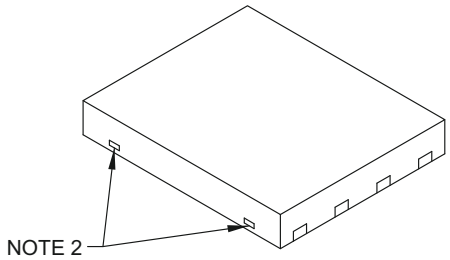

Units		MILLIMETERS		
Dimension Limits		MIN	NOM	MAX
Number of Pins	N		8	
Pitch	e		1.27 BSC	
Overall Height	A	0.80	0.85	1.00
Standoff	A1	0.00	0.01	0.05
Contact Thickness	A3		0.20 REF	
Overall Length	D		5.00 BSC	
Overall Width	E		6.00 BSC	
Exposed Pad Length	D2	3.90	4.00	4.10
Exposed Pad Width	E2	2.20	2.30	2.40
Contact Width	b	0.35	0.40	0.48
Contact Length	L	0.50	0.60	0.75
Contact-to-Exposed Pad	K	0.20	–	–

Notes:

1. Pin 1 visual index feature may vary, but must be located within the hatched area.
2. Package may have one or more exposed tie bars at ends.
3. Package is saw singulated.
4. Dimensioning and tolerancing per ASME Y14.5M.

BSC: Basic Dimension. Theoretically exact value shown without tolerances.

REF: Reference Dimension, usually without tolerance, for information purposes only.

Microchip Technology Drawing C04-122B

© 2010 Microchip Technology Inc.

8-Lead Plastic Dual Flat, No Lead Package (MF) - 6x5 mm Body [DFN-S]

Note: For the most current package drawings, please see the Microchip Packaging Specification located at http://www.microchip.com/packaging

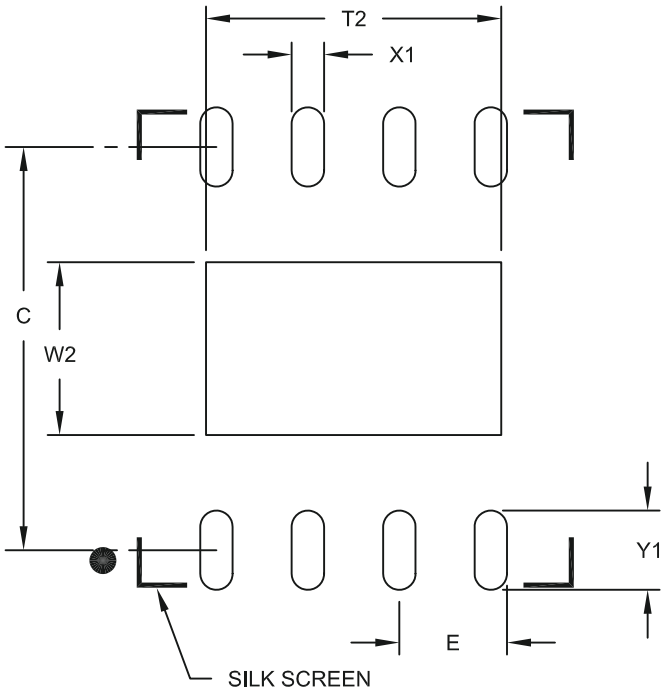

RECOMMENDED LAND PATTERN

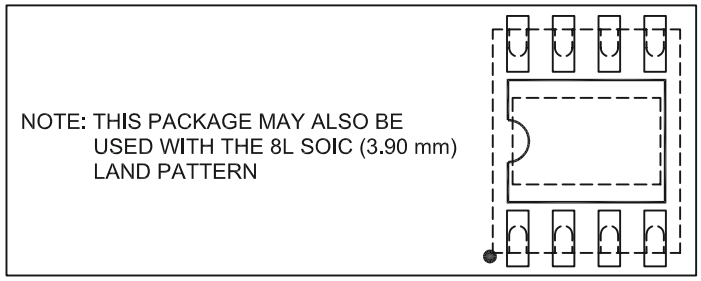

Units		MILLIMETERS		
Dimension Limits		MIN	NOM	MAX
Contact Pitch	E	1.27 BSC		
Optional Center Pad Width	W2			2.40
Optional Center Pad Length	T2			4.10
Contact Pad Spacing	C		5.60	
Contact Pad Width (X8)	X1			0.45
Contact Pad Length (X8)	Y1			1.10

Notes:

1. Dimensioning and tolerancing per ASME Y14.5M

BSC: Basic Dimension. Theoretically exact value shown without tolerances.

Microchip Technology Drawing No. C04-2122A

8-Lead Chip Scale Package (CS) - [CSP]

Note:	For the most current package drawings, please see the Microchip Packaging Specification located at http://www.microchip.com/packaging

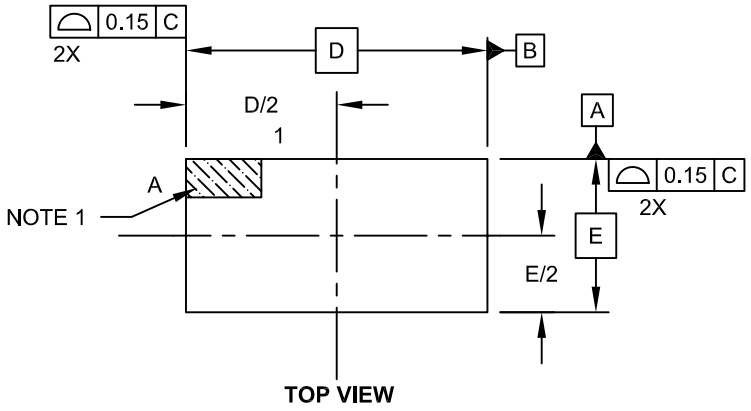

TOP VIEW

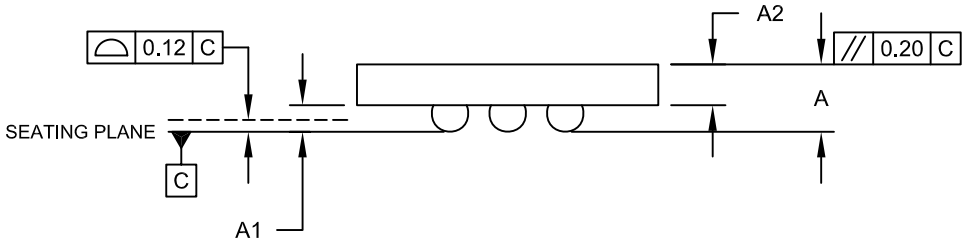

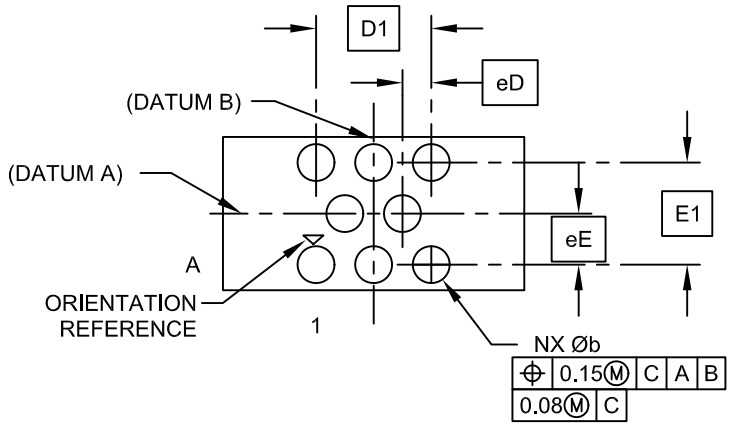

BOTTOM VIEW

Microchip Technology Drawing C04-6001C Sheet 1 of 2

© 2010 Microchip Technology Inc.

8-Lead Chip Scale Package (CS) - [CSP]

Note: For the most current package drawings, please see the Microchip Packaging Specification located at http://www.microchip.com/packaging

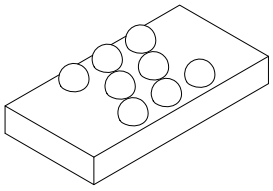

Units		MILLIMETERS		
Dimension Limits		MIN	NOM	MAX
Number of Contacts	N		8	
Overall Grid X-Pitch	E1		0.886 BSC	
Overall Grid Y-Pitch	D1		1.00 BSC	
Adjacent Column X-Pitch	eE		0.443 BSC	
Adjacent Row Y-Pitch	eD		0.25 BSC	
Overall Height	A	0.53	0.59	0.64
Die Height	A2	0.33	0.36	0.38
Bump Height	A1	0.20	0.23	0.26
Overall Width	E		NOTE 4	
Overall Length	D		NOTE 4	
Ball Diameter	b	0.30	0.32	0.34

Notes:

1. Orientation reference feature may vary, but must be located within the hatched area.
2. Package is saw singulated.
3. Dimensioning and tolerancing per ASME Y14.5M.
   BSC: Basic Dimension. Theoretically exact value shown without tolerances.
   REF: Reference Dimension, usually without tolerance, for information purposes only.
4. Package size varies with specific devices. Please contact your local Microchip representative for specific details

Microchip Technology Drawing C04-6001C Sheet 2 of 2

8-Lead Chip Scale Package (CS) - [CSP]

Note: For the most current package drawings, please see the Microchip Packaging Specification located at http://www.microchip.com/packaging

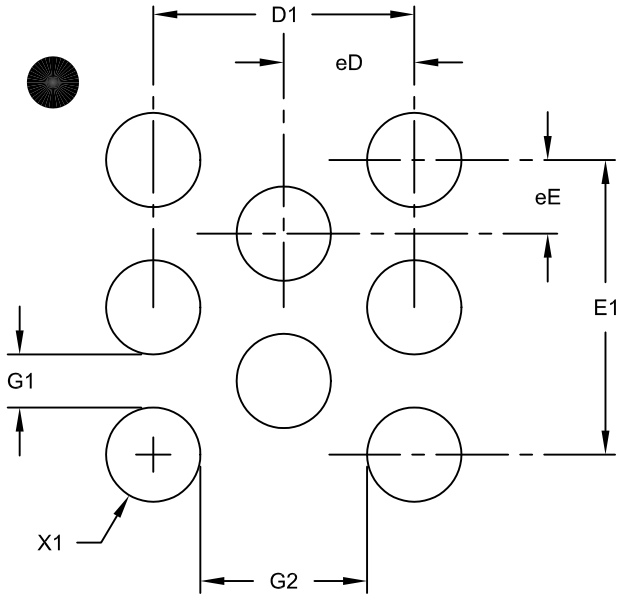

RECOMMENDED LAND PATTERN

Units		MILLIMETERS		
Dimension Limits		MIN	NOM	MAX
Number of Contacts	N		8	
Contact Pitch Y	eE		0.25	
Contact Pitch X	eD		0.443	
Contact Pad Spacing	E1		1.00	
Contact Pad Spacing	D1		0.886	
Contact Pad Diameter (X8)	X1			0.32
Distance Between Pads	G1	0.18		
Distance Between Pads	G2	0.56		

Notes:

1. Dimensioning and tolerancing per ASME Y14.5M

BSC: Basic Dimension. Theoretically exact value shown without tolerances.

Microchip Technology Drawing No. C04-8001A

© 2010 Microchip Technology Inc.

APPENDIX A: REVISION HISTORY

Revision D

Correction to Section 1.0, Electrical Characteristics.

Revision E

Correction to Section 1.0., Ambient Temperature
Correction to Section 6.2, Page Write

Revision F

Add E3 (Pb-free) to marking examples.
Updated Marking Legend and On-line Support.

Revision G

Revised Sections 2.1, 2.4 and 6.3.

Revision H

Revised Features section; Revised 1.8V voltage to 1.7V; Replaced Package Drawings; Revised Product ID System; Removed 14 Lead TSSOP.

Revision J

Revised Table 1-2, AC Characteristics; Updated Packaging.

Revision K (06/2009)

Removed CMOS from title; Revised Table 1-2, Para. 18; Added SOIC and TSSOP packaging; Updated Pin Descriptions; Updated Product ID.

Revision L (12/2009)

Added note to Section 6.1.

Revision M (03/2010)

Added 8-Lead Chip Scale package.

NOTES:

© 2010 Microchip Technology Inc.

THE MICROCHIP WEB SITE

Microchip provides online support via our WWW site at www.microchip.com. This web site is used as a means to make files and information easily available to customers. Accessible by using your favorite Internet browser, the web site contains the following information:

- **Product Support** – Data sheets and errata, application notes and sample programs, design resources, user's guides and hardware support documents, latest software releases and archived software
- **General Technical Support** – Frequently Asked Questions (FAQ), technical support requests, online discussion groups, Microchip consultant program member listing
- **Business of Microchip** – Product selector and ordering guides, latest Microchip press releases, listing of seminars and events, listings of Microchip sales offices, distributors and factory representatives

CUSTOMER CHANGE NOTIFICATION SERVICE

Microchip's customer notification service helps keep customers current on Microchip products. Subscribers will receive e-mail notification whenever there are changes, updates, revisions or errata related to a specified product family or development tool of interest.

To register, access the Microchip web site at www.microchip.com, click on Customer Change Notification and follow the registration instructions.

CUSTOMER SUPPORT

Users of Microchip products can receive assistance through several channels:

- Distributor or Representative
- Local Sales Office
- Field Application Engineer (FAE)
- Technical Support
- Development Systems Information Line

Customers should contact their distributor, representative or field application engineer (FAE) for support. Local sales offices are also available to help customers. A listing of sales offices and locations is included in the back of this document.

Technical support is available through the web site at: http://support.microchip.com

READER RESPONSE

It is our intention to provide you with the best documentation possible to ensure successful use of your Microchip product. If you wish to provide your comments on organization, clarity, subject matter, and ways in which our documentation can better serve you, please FAX your comments to the Technical Publications Manager at (480) 792-4150.

Please list the following information, and use this outline to provide us with your comments about this document.

To: Technical Publications Manager Total Pages Sent _____

RE: Reader Response

From: Name _____

Company _____

Address _____

City / State / ZIP / Country _____

Telephone: (_____) _____ - _____ FAX: (_____) _____ - _____

Application (optional):

Would you like a reply? ___Y ___N

Device: 24AA512/24LC512/24FC512 Literature Number: DS21754M

Questions:

1. What are the best features of this document?

2. How does this document meet your hardware and software development needs?

3. Do you find the organization of this document easy to follow? If not, why?

4. What additions to the document do you think would enhance the structure and subject?

5. What deletions from the document could be made without affecting the overall usefulness?

6. Is there any incorrect or misleading information (what and where)?

7. How would you improve this document?

© 2010 Microchip Technology Inc.

PRODUCT IDENTIFICATION SYSTEM

To order or obtain information, e.g., on pricing or delivery, refer to the factory or the listed sales office.

PART NO.	X	/XX
Device	Temperature Range	Package

Device:	24AA512:	512 Kbit 1.8V I^2C Serial EEPROM
	24AA512T:	512 Kbit 1.8V I^2C Serial EEPROM (Tape and Reel)
	24LC512:	512 Kbit 2.5V I^2C Serial EEPROM
	24LC512T:	512 Kbit 2.5V I^2C Serial EEPROM (Tape and Reel)
	24FC512:	512 Kbit 1 MHz I^2C Serial EEPROM
	24FC512T:	512 Kbit 1 MHz I^2C Serial EEPROM (Tape and Reel)
Temperature Range:	I =	-40°C to +85°C
	E =	-40°C to +125°C
Package:	P =	Plastic DIP (300 mil body), 8-lead
	SM =	Plastic SOIJ (5.28 mm body), 8-lead
	MF =	Micro Lead Frame (6x5 mm body), 8-lead
	SN =	Plastic SOIC (3.90 mm body), 8-lead
	ST =	Plastic TSSOP (4.4 mm), 8-lead
	ST14 =	Plastic TSSOP (4.4 mm), 14-lead
	CS17K(1) =	Chip Scale (CS), 8-lead (I-temp, "AA", Tape and Reel only)

Note 1: "17K" indicates 160K technology.

Examples:

a) 24AA512-I/P: Industrial Temp., 1.7V, PDIP package.

b) 24AA512T-I/SM: Tape and Reel, Industrial Temp., 1.7V, SOIJ package.

c) 24AA512-I/MF: Industrial Temp., 1.7V, DFN package.

d) 24LC512-E/P: Extended Temp., 2.5V, PDIP package.

e) 24LC512-I/SN: Industrial Temp., 2.5V, SOIC package.

f) 24LC512T-I/SM: Tape and Reel, Industrial Temp., 2.5V, SOIJ package.

g) 24LC512-I/ST: Industrial Temp., 2.5V, TSSOP package.

h) 24FC512-I/P: Industrial Temp., 1.7V, High Speed, PDIP package.

i) 24FC512-I/SM: Industrial Temp., 1.7V, High Speed, SOIJ package.

j) 24FC512T-I/SN: Tape and Reel, Industrial Temp., 1.7V, High Speed, SOIC package.

k) 24AA512T-I/CS17K: Industrial Temp., 1.7V, CS package, Tape and Reel

NOTES:

© 2010 Microchip Technology Inc.

Note the following details of the code protection feature on Microchip devices:

- Microchip products meet the specification contained in their particular Microchip Data Sheet.
- Microchip believes that its family of products is one of the most secure families of its kind on the market today, when used in the intended manner and under normal conditions.
- There are dishonest and possibly illegal methods used to breach the code protection feature. All of these methods, to our knowledge, require using the Microchip products in a manner outside the operating specifications contained in Microchip's Data Sheets. Most likely, the person doing so is engaged in theft of intellectual property.
- Microchip is willing to work with the customer who is concerned about the integrity of their code.
- Neither Microchip nor any other semiconductor manufacturer can guarantee the security of their code. Code protection does not mean that we are guaranteeing the product as "unbreakable."

Code protection is constantly evolving. We at Microchip are committed to continuously improving the code protection features of our products. Attempts to break Microchip's code protection feature may be a violation of the Digital Millennium Copyright Act. If such acts allow unauthorized access to your software or other copyrighted work, you may have a right to sue for relief under that Act.

Information contained in this publication regarding device applications and the like is provided only for your convenience and may be superseded by updates. It is your responsibility to ensure that your application meets with your specifications. MICROCHIP MAKES NO REPRESENTATIONS OR WARRANTIES OF ANY KIND WHETHER EXPRESS OR IMPLIED, WRITTEN OR ORAL, STATUTORY OR OTHERWISE, RELATED TO THE INFORMATION, INCLUDING BUT NOT LIMITED TO ITS CONDITION, QUALITY, PERFORMANCE, MERCHANTABILITY OR FITNESS FOR PURPOSE**.** Microchip disclaims all liability arising from this information and its use. Use of Microchip devices in life support and/or safety applications is entirely at the buyer's risk, and the buyer agrees to defend, indemnify and hold harmless Microchip from any and all damages, claims, suits, or expenses resulting from such use. No licenses are conveyed, implicitly or otherwise, under any Microchip intellectual property rights.

Trademarks

The Microchip name and logo, the Microchip logo, dsPIC, KEELOQ, KEELOQ logo, MPLAB, PIC, PICmicro, PICSTART, PIC^{32} logo, rfPIC and UNI/O are registered trademarks of Microchip Technology Incorporated in the U.S.A. and other countries.

FilterLab, Hampshire, HI-TECH C, Linear Active Thermistor, MXDEV, MXLAB, SEEVAL and The Embedded Control Solutions Company are registered trademarks of Microchip Technology Incorporated in the U.S.A.

Analog-for-the-Digital Age, Application Maestro, CodeGuard, dsPICDEM, dsPICDEM.net, dsPICworks, dsSPEAK, ECAN, ECONOMONITOR, FanSense, HI-TIDE, In-Circuit Serial Programming, ICSP, Mindi, MiWi, MPASM, MPLAB Certified logo, MPLIB, MPLINK, mTouch, Octopus, Omniscient Code Generation, PICC, PICC-18, PICDEM, PICDEM.net, PICkit, PICtail, REAL ICE, rfLAB, Select Mode, Total Endurance, TSHARC, UniWinDriver, WiperLock and ZENA are trademarks of Microchip Technology Incorporated in the U.S.A. and other countries.

SQTP is a service mark of Microchip Technology Incorporated in the U.S.A.

All other trademarks mentioned herein are property of their respective companies.

© 2010, Microchip Technology Incorporated, Printed in the U.S.A., All Rights Reserved.

Printed on recycled paper.

ISBN: 978-1-60932-073-7

QUALITY MANAGEMENT SYSTEM
CERTIFIED BY DNV
ISO/TS 16949:2002

Microchip received ISO/TS-16949:2002 certification for its worldwide headquarters, design and wafer fabrication facilities in Chandler and Tempe, Arizona; Gresham, Oregon and design centers in California and India. The Company's quality system processes and procedures are for its PIC® MCUs and dsPIC® DSCs, KEELOQ® code hopping devices, Serial EEPROMs, microperipherals, nonvolatile memory and analog products. In addition, Microchip's quality system for the design and manufacture of development systems is ISO 9001:2000 certified.

WORLDWIDE SALES AND SERVICE

AMERICAS

Corporate Office
2355 West Chandler Blvd.
Chandler, AZ 85224-6199
Tel: 480-792-7200
Fax: 480-792-7277
Technical Support:
http://support.microchip.com
Web Address:
www.microchip.com

Atlanta
Duluth, GA
Tel: 678-957-9614
Fax: 678-957-1455

Boston
Westborough, MA
Tel: 774-760-0087
Fax: 774-760-0088

Chicago
Itasca, IL
Tel: 630-285-0071
Fax: 630-285-0075

Cleveland
Independence, OH
Tel: 216-447-0464
Fax: 216-447-0643

Dallas
Addison, TX
Tel: 972-818-7423
Fax: 972-818-2924

Detroit
Farmington Hills, MI
Tel: 248-538-2250
Fax: 248-538-2260

Kokomo
Kokomo, IN
Tel: 765-864-8360
Fax: 765-864-8387

Los Angeles
Mission Viejo, CA
Tel: 949-462-9523
Fax: 949-462-9608

Santa Clara
Santa Clara, CA
Tel: 408-961-6444
Fax: 408-961-6445

Toronto
Mississauga, Ontario,
Canada
Tel: 905-673-0699
Fax: 905-673-6509

ASIA/PACIFIC

Asia Pacific Office
Suites 3707-14, 37th Floor
Tower 6, The Gateway
Harbour City, Kowloon
Hong Kong
Tel: 852-2401-1200
Fax: 852-2401-3431

Australia - Sydney
Tel: 61-2-9868-6733
Fax: 61-2-9868-6755

China - Beijing
Tel: 86-10-8528-2100
Fax: 86-10-8528-2104

China - Chengdu
Tel: 86-28-8665-5511
Fax: 86-28-8665-7889

China - Chongqing
Tel: 86-23-8980-9588
Fax: 86-23-8980-9500

China - Hong Kong SAR
Tel: 852-2401-1200
Fax: 852-2401-3431

China - Nanjing
Tel: 86-25-8473-2460
Fax: 86-25-8473-2470

China - Qingdao
Tel: 86-532-8502-7355
Fax: 86-532-8502-7205

China - Shanghai
Tel: 86-21-5407-5533
Fax: 86-21-5407-5066

China - Shenyang
Tel: 86-24-2334-2829
Fax: 86-24-2334-2393

China - Shenzhen
Tel: 86-755-8203-2660
Fax: 86-755-8203-1760

China - Wuhan
Tel: 86-27-5980-5300
Fax: 86-27-5980-5118

China - Xian
Tel: 86-29-8833-7252
Fax: 86-29-8833-7256

China - Xiamen
Tel: 86-592-2388138
Fax: 86-592-2388130

China - Zhuhai
Tel: 86-756-3210040
Fax: 86-756-3210049

ASIA/PACIFIC

India - Bangalore
Tel: 91-80-3090-4444
Fax: 91-80-3090-4123

India - New Delhi
Tel: 91-11-4160-8631
Fax: 91-11-4160-8632

India - Pune
Tel: 91-20-2566-1512
Fax: 91-20-2566-1513

Japan - Yokohama
Tel: 81-45-471- 6166
Fax: 81-45-471-6122

Korea - Daegu
Tel: 82-53-744-4301
Fax: 82-53-744-4302

Korea - Seoul
Tel: 82-2-554-7200
Fax: 82-2-558-5932 or
82-2-558-5934

Malaysia - Kuala Lumpur
Tel: 60-3-6201-9857
Fax: 60-3-6201-9859

Malaysia - Penang
Tel: 60-4-227-8870
Fax: 60-4-227-4068

Philippines - Manila
Tel: 63-2-634-9065
Fax: 63-2-634-9069

Singapore
Tel: 65-6334-8870
Fax: 65-6334-8850

Taiwan - Hsin Chu
Tel: 886-3-6578-300
Fax: 886-3-6578-370

Taiwan - Kaohsiung
Tel: 886-7-536-4818
Fax: 886-7-536-4803

Taiwan - Taipei
Tel: 886-2-2500-6610
Fax: 886-2-2508-0102

Thailand - Bangkok
Tel: 66-2-694-1351
Fax: 66-2-694-1350

EUROPE

Austria - Wels
Tel: 43-7242-2244-39
Fax: 43-7242-2244-393

Denmark - Copenhagen
Tel: 45-4450-2828
Fax: 45-4485-2829

France - Paris
Tel: 33-1-69-53-63-20
Fax: 33-1-69-30-90-79

Germany - Munich
Tel: 49-89-627-144-0
Fax: 49-89-627-144-44

Italy - Milan
Tel: 39-0331-742611
Fax: 39-0331-466781

Netherlands - Drunen
Tel: 31-416-690399
Fax: 31-416-690340

Spain - Madrid
Tel: 34-91-708-08-90
Fax: 34-91-708-08-91

UK - Wokingham
Tel: 44-118-921-5869
Fax: 44-118-921-5820

01/05/10

© 2010 Microchip Technology Inc.