# MCP1827/MCP1827S

## 1.5A, Low-Voltage, Low Quiescent Current LDO Regulator

### Features:

- 1.5A Output Current Capability
- Input Operating Voltage Range: 2.3V to 6.0V
- Adjustable Output Voltage Range: 0.8V to 5.0V (MCP1827 only)
- Standard Fixed Output Voltages:
  - 0.8V, 1.2V, 1.8V, 2.5V, 3.0V, 3.3V, 5.0V
- Other Fixed Output Voltage Options Available Upon Request
- Low Dropout Voltage: 330 mV Typical at 1.5A
- Typical Output Voltage Tolerance: 0.5%
- Stable with 1.0 µF Ceramic Output Capacitor
- Fast response to Load Transients
- Low Supply Current: 120 µA (typ)
- Low Shutdown Supply Current: 0.1 µA (typ) (MCP1827 only)
- Fixed Delay on Power Good Output (MCP1827 only)
- Short Circuit Current Limiting and Overtemperature Protection
- 5-Lead Plastic DDPAK, 5-Lead TO-220 Package Options (MCP1827)
- 3-Lead Plastic DDPAK, 3-Lead TO-220 Package Options (MCP1827S)

### Applications:

- High-Speed Driver Chipset Power
- Networking Backplane Cards
- Notebook Computers
- Network Interface Cards
- Palmtop Computers
- 2.5V to 1.XV Regulators

### Description:

The MCP1827/MCP1827S is a 1.5A Low Dropout (LDO) linear regulator that provides high current and low output voltages. The MCP1827 comes in a fixed or adjustable output voltage version, with an output voltage range of 0.8V to 5.0V. The 1.5A output current capability, combined with the low output voltage capability, make the MCP1827 a good choice for new sub-1.8V output voltage LDO applications that have high current demands. The MCP1827S is a 3-pin fixed voltage version. The MCP1827/MCP1827S is based upon the MCP1727 LDO device.

The MCP1827/MCP1827S is stable using ceramic output capacitors that inherently provide lower output noise and reduce the size and cost of the entire regulator solution. Only 1 µF of output capacitance is needed to stabilize the LDO.

Using CMOS construction, the quiescent current consumed by the MCP1827/MCP1827S is typically less than 120 µA over the entire input voltage range, making it attractive for portable computing applications that demand high output current. The MCP1827 versions have a Shutdown ($\overline{SHDN}$) pin. When shut down, the quiescent current is reduced to less than 0.1 µA.

On the MCP1827 fixed output versions the scaled-down output voltage is internally monitored and a power good (PWRGD) output is provided when the output is within 92% of regulation (typical). The PWRGD delay is internally fixed at 200 µs (typical).

The overtemperature and short circuit current-limiting provide additional protection for the LDO during system Fault conditions.

### Package Types

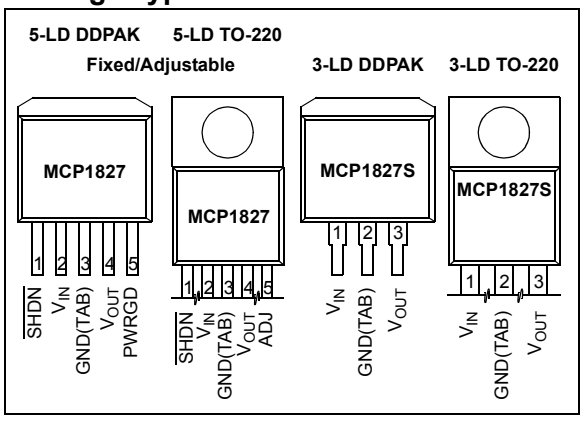


© 2006-2013 Microchip Technology Inc.

**Typical Application**

**MCP1827 Fixed Output Voltage**

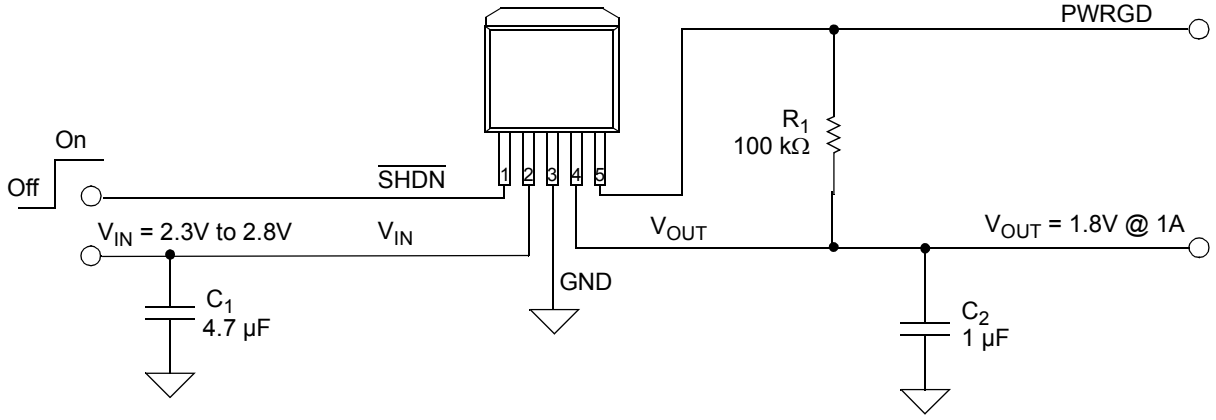


**MCP1827 Adjustable Output Voltage**

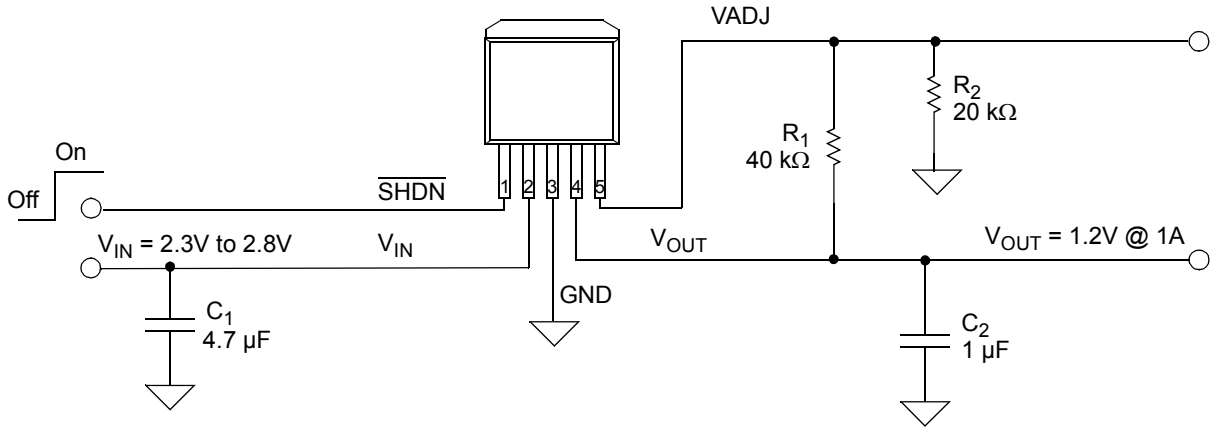



© 2006-2013 Microchip Technology Inc.

**Functional Block Diagram – Adjustable Output**

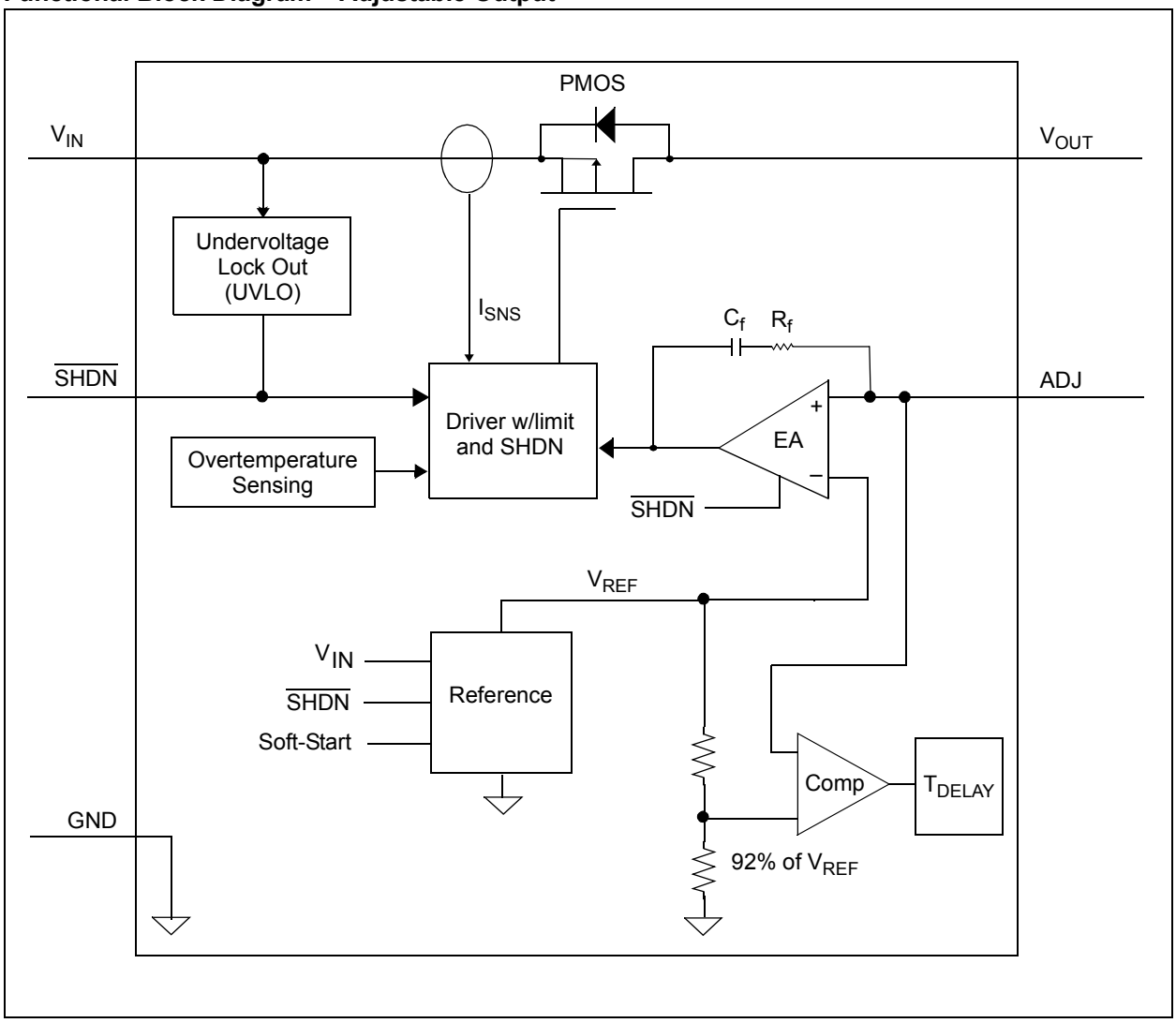

**Functional Block Diagram – Fixed Output (5-pin)**

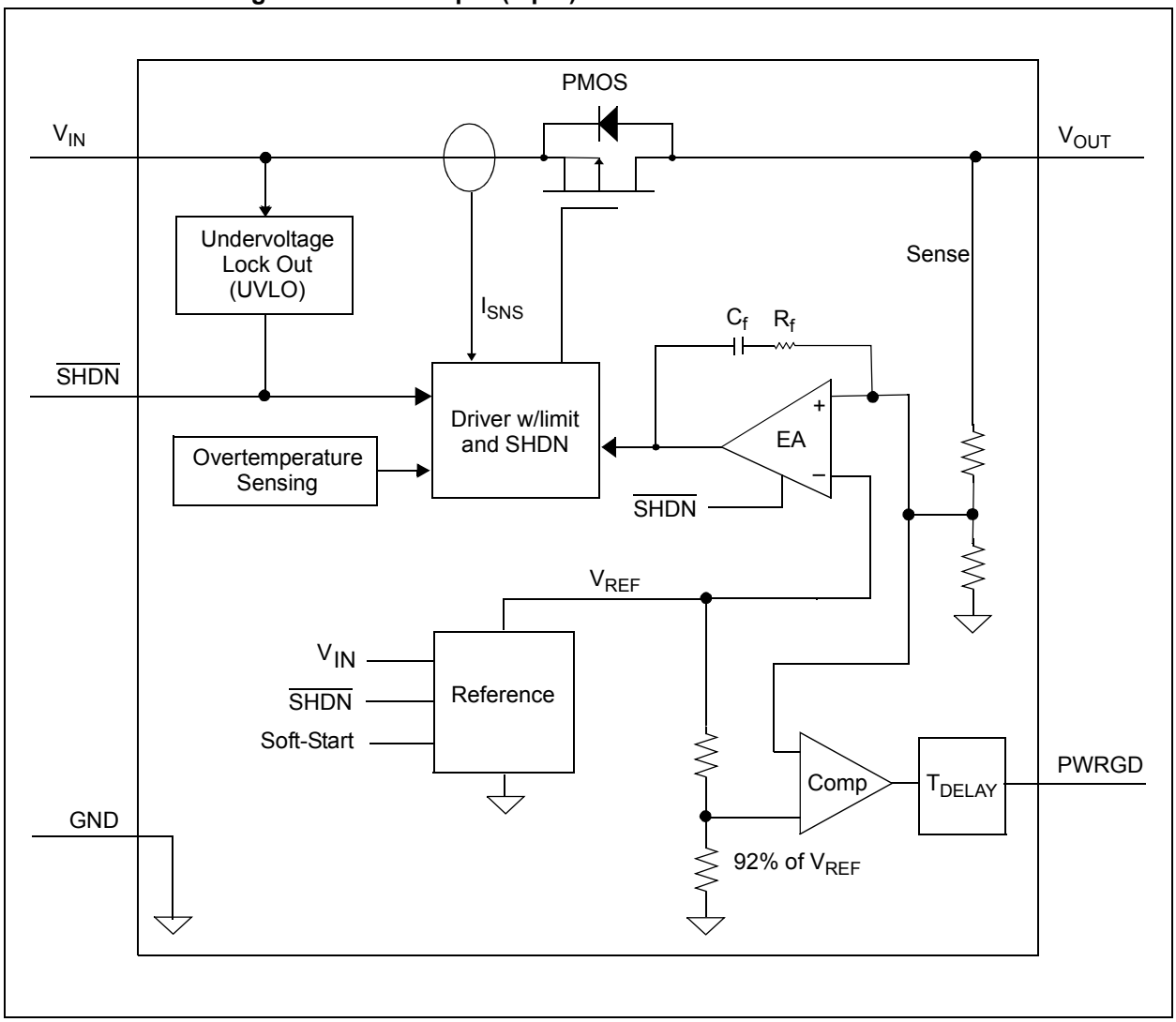



© 2006-2013 Microchip Technology Inc.

**Functional Block Diagram – Fixed Output (3-Pin)**

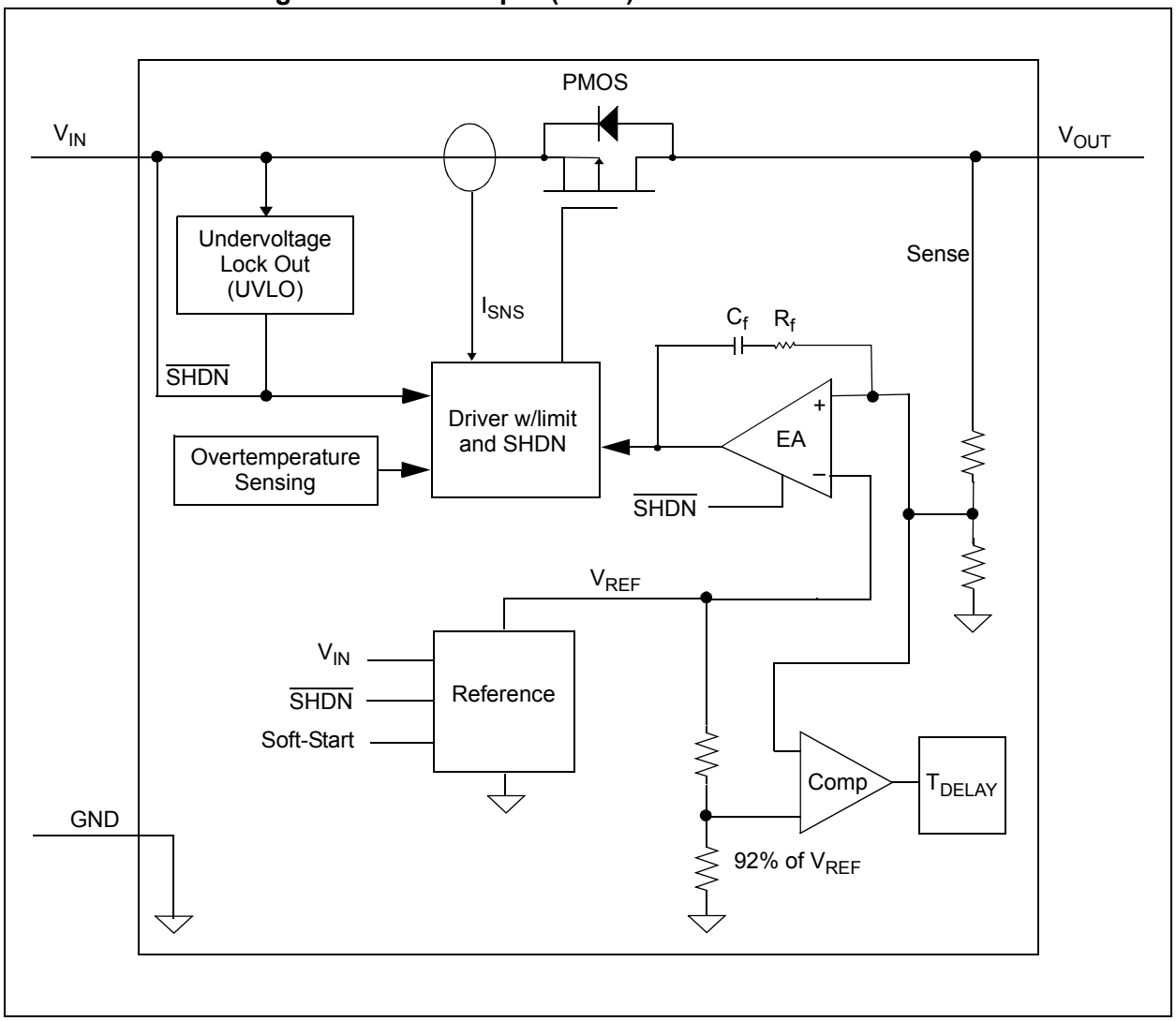

# 1.0 ELECTRICAL CHARACTERISTICS

## Absolute Maximum Ratings †

$V_{IN}$ .....6.5V

Maximum Voltage on Any Pin .. (GND – 0.3V) to ($V_{DD}$ + 0.3)V

Maximum Power Dissipation ..... Internally-Limited (**Note 6**)

Output Short Circuit Duration .....Continuous

Storage temperature .....-65°C to +150°C

Maximum Junction Temperature, $T_J$ .....+150°C

ESD protection on all pins (HBM/MM) ..... ≥ 2 kV; ≥ 200V

**† Notice:** Stresses above those listed under "Maximum Ratings" may cause permanent damage to the device. This is a stress rating only and functional operation of the device at those or any other conditions above those indicated in the operational listings of this specification is not implied. Exposure to maximum rating conditions for extended periods may affect device reliability.

## AC/DC CHARACTERISTICS

**Electrical Specifications:** Unless otherwise noted, $V_{IN} = V_{OUT(MAX)} + V_{DROPOUT(MAX)}$ **Note 1**, $V_R$=1.8V for Adjustable Output, $I_{OUT}$ = 1 mA, $C_{IN} = C_{OUT}$ = 4.7 µF (X7R Ceramic), $T_A$ = +25°C. **Boldface** type applies for junction temperatures, $T_J$ (**Note 7**) of **-40°C to +125°C**

| Parameters | Sym. | Min. | Typ. | Max. | Units | Conditions |
|---|---|---|---|---|---|---|
| Input Operating Voltage | $V_{IN}$ | **2.3** | | **6.0** | V | |
| Input Quiescent Current | $I_q$ | — | 120 | **220** | µA | $I_L$ = 0 mA, $V_{OUT}$ = 0.8V to 5.0V |
| Input Quiescent Current for $\overline{SHDN}$ Mode | $I_{\overline{SHDN}}$ | — | 0.1 | **3** | µA | $\overline{SHDN}$ = GND |
| Maximum Output Current | $I_{OUT}$ | **1.5** | — | — | A | $V_{IN}$ = 2.3V to 6.0V<br>$V_R$ = 0.8V to 5.0V |
| Line Regulation | $\Delta V_{OUT}/(V_{OUT} \times \Delta V_{IN})$ | — | 0.05 | **0.16** | %/V | (**Note 1**) ≤ $V_{IN}$ ≤ 6V |
| Load Regulation | $\Delta V_{OUT}/V_{OUT}$ | **-1.0** | ±0.5 | **1.0** | % | $I_{OUT}$ = 1 mA to 1.5A (**Note 4**) |
| Output Short Circuit Current | $I_{OUT_SC}$ | — | 2.2 | — | A | $R_{LOAD}$ < 0.1Ω, Peak Current |
| **Adjust Pin Characteristics (Adjustable Output Only)** | | | | | | |
| Adjust Pin Reference Voltage | $V_{ADJ}$ | **0.402** | 0.410 | **0.418** | V | $V_{IN}$ = 2.3V to $V_{IN}$ = 6.0V, $I_{OUT}$ = 1 mA |
| Adjust Pin Leakage Current | $I_{ADJ}$ | -10 | ±0.01 | +10 | nA | $V_{IN}$ = 6.0V, $V_{ADJ}$ = 0V to 6V |
| Adjust Temperature Coefficient | $TCV_{OUT}$ | — | 40 | — | ppm/°C | **Note 3** |
| **Fixed-Output Characteristics (Fixed Output Only)** | | | | | | |
| Voltage Regulation | $V_{OUT}$ | **$V_R$ - 2.5%** | $V_R$ ±0.5% | **$V_R$ + 2.5%** | V | **Note 2** |

**Note 1:** The minimum $V_{IN}$ must meet two conditions: $V_{IN} \geq 2.3V$ and $V_{IN} \geq V_{OUT(MAX)} + V_{DROPOUT(MAX)}$.

**2:** $V_R$ is the nominal regulator output voltage for the fixed cases. $V_R$ = 1.2V, 1.8V, etc. $V_R$ is the desired set point output voltage for the adjustable cases. $V_R = V_{ADJ} * ((R_1/R_2)+1)$. Figure 4-1.

**3:** $TCV_{OUT} = (V_{OUT-HIGH} - V_{OUT-LOW}) * 10^6 / (V_R * \Delta Temperature)$. $V_{OUT-HIGH}$ is the highest voltage measured over the temperature range. $V_{OUT-LOW}$ is the lowest voltage measured over the temperature range.

**4:** Load regulation is measured at a constant junction temperature using low duty-cycle pulse testing. Load regulation is tested over a load range from 1 mA to the maximum specified output current.

**5:** Dropout voltage is defined as the input-to-output voltage differential at which the output voltage drops 2% below its nominal value that was measured with an input voltage of $V_{IN} = V_{OUTMAX} + V_{DROPOUT(MAX)}$.

**6:** The maximum allowable power dissipation is a function of ambient temperature, the maximum allowable junction temperature and the thermal resistance from junction to air. (i.e., $T_A$, $T_J$, $\theta_{JA}$). Exceeding the maximum allowable power dissipation will cause the device operating junction temperature to exceed the maximum +150°C rating. Sustained junction temperatures above 150°C can impact device reliability.

**7:** The junction temperature is approximated by soaking the device under test at an ambient temperature equal to the desired junction temperature. The test time is small enough such that the rise in the junction temperature over the ambient temperature is not significant.


© 2006-2013 Microchip Technology Inc.

## AC/DC CHARACTERISTICS (CONTINUED)

**Electrical Specifications:** Unless otherwise noted, $V_{IN} = V_{OUT(MAX)} + V_{DROPOUT(MAX)}$ **Note 1**, $V_R$=1.8V for Adjustable Output, $I_{OUT}$ = 1 mA, $C_{IN} = C_{OUT}$ = 4.7 µF (X7R Ceramic), $T_A$ = +25°C. **Boldface** type applies for junction temperatures, $T_J$ (**Note 7**) of **-40°C to +125°C**

| Parameters | Sym. | Min. | Typ. | Max. | Units | Conditions |
|---|---|---|---|---|---|---|
| **Dropout Characteristics** | | | | | | |
| Dropout Voltage | $V_{IN}$-$V_{OUT}$ | — | 330 | **600** | mV | **Note 5**, $I_{OUT}$ = 1.5A, $V_{IN(MIN)}$ = 2.3V |
| **Power Good Characteristics** | | | | | | |
| PWRGD Input Voltage Operating Range | $V_{PWRGD_VIN}$ | 1.0<br>**1.2** | —<br>— | 6.0<br>**6.0** | V | $T_A$ = +25°C<br>$T_A$ = -40°C to +125°C<br>For $V_{IN}$ < 2.3V, $I_{SINK}$ = 100 µA |
| PWRGD Threshold Voltage (Referenced to $V_{OUT}$) | $V_{PWRGD_TH}$ | <br>**89**<br>**90** | <br>92<br>92 | <br>**95**<br>**94** | %$V_{OUT}$ | Falling Edge<br>$V_{OUT}$ < 2.5V Fixed, $V_{OUT}$ = Adj.<br>$V_{OUT}$ >= 2.5V Fixed |
| PWRGD Threshold Hysteresis | $V_{PWRGD_HYS}$ | **1.0** | 2.0 | **3.0** | %$V_{OUT}$ | |
| PWRGD Output Voltage Low | $V_{PWRGD_L}$ | — | 0.2 | **0.4** | V | $I_{PWRGD\ SINK}$ = 1.2 mA, ADJ = 0V |
| PWRGD Leakage | $P_{WRGD_LK}$ | — | 1 | — | nA | $V_{PWRGD} = V_{IN}$ = 6.0V |
| PWRGD Time Delay | $T_{PG}$ | — | 200 | — | µs | Rising Edge<br>$R_{PULLUP}$ = 10 kΩ |
| Detect Threshold to PWRGD Active Time Delay | $T_{VDET-PWRGD}$ | — | 200 | — | µs | $V_{ADJ}$ or $V_{OUT} = V_{PWRGD_TH}$ + 20 mV to $V_{PWRGD_TH}$ - 20 mV |
| **Shutdown Input** | | | | | | |
| Logic High Input | $V_{SHDN-HIGH}$ | **45** | | | %$V_{IN}$ | $V_{IN}$ = 2.3V to 6.0V |
| Logic Low Input | $V_{SHDN-LOW}$ | | | **15** | %$V_{IN}$ | $V_{IN}$ = 2.3V to 6.0V |
| $\overline{SHDN}$ Input Leakage Current | $\overline{SHDN}_{ILK}$ | **-0.1** | ±0.001 | **+0.1** | µA | $V_{IN}$ = 6V, $\overline{SHDN}$ =$V_{IN}$, $\overline{SHDN}$ = GND |
| **AC Performance** | | | | | | |
| Output Delay From $\overline{SHDN}$ | $T_{OR}$ | | 100 | | µs | $\overline{SHDN}$ = GND to $V_{IN}$<br>$V_{OUT}$ = GND to 95% $V_R$ |
| Output Noise | $e_N$ | — | 2.0 | — | µV/√Hz | $I_{OUT}$ = 200 mA, f = 1 kHz, $C_{OUT}$ = 10 µF (X7R Ceramic), $V_{OUT}$ = 2.5V |
| Power Supply Ripple Rejection Ratio | PSRR | — | 60 | — | dB | f = 100 Hz, $C_{OUT}$ = 10 µF, $I_{OUT}$ = 10 mA, $V_{INAC}$ = 30 mV pk-pk, $C_{IN}$ = 0 µF |

**Note 1:** The minimum $V_{IN}$ must meet two conditions: $V_{IN} \geq 2.3V$ and $V_{IN} \geq V_{OUT(MAX)} + V_{DROPOUT(MAX)}$.

**2:** $V_R$ is the nominal regulator output voltage for the fixed cases. $V_R$ = 1.2V, 1.8V, etc. $V_R$ is the desired set point output voltage for the adjustable cases. $V_R = V_{ADJ} * ((R_1/R_2)+1)$. Figure 4-1.

**3:** $TCV_{OUT} = (V_{OUT-HIGH} - V_{OUT-LOW}) * 10^6 / (V_R * \Delta Temperature)$. $V_{OUT-HIGH}$ is the highest voltage measured over the temperature range. $V_{OUT-LOW}$ is the lowest voltage measured over the temperature range.

**4:** Load regulation is measured at a constant junction temperature using low duty-cycle pulse testing. Load regulation is tested over a load range from 1 mA to the maximum specified output current.

**5:** Dropout voltage is defined as the input-to-output voltage differential at which the output voltage drops 2% below its nominal value that was measured with an input voltage of $V_{IN} = V_{OUTMAX} + V_{DROPOUT(MAX)}$.

**6:** The maximum allowable power dissipation is a function of ambient temperature, the maximum allowable junction temperature and the thermal resistance from junction to air. (i.e., $T_A$, $T_J$, $\theta_{JA}$). Exceeding the maximum allowable power dissipation will cause the device operating junction temperature to exceed the maximum +150°C rating. Sustained junction temperatures above 150°C can impact device reliability.

**7:** The junction temperature is approximated by soaking the device under test at an ambient temperature equal to the desired junction temperature. The test time is small enough such that the rise in the junction temperature over the ambient temperature is not significant.

© 2006-2013 Microchip Technology Inc.

## AC/DC CHARACTERISTICS (CONTINUED)

**Electrical Specifications:** Unless otherwise noted, $V_{IN} = V_{OUT(MAX)} + V_{DROPOUT(MAX)}$ **Note 1**, $V_R$=1.8V for Adjustable Output, $I_{OUT}$ = 1 mA, $C_{IN} = C_{OUT}$ = 4.7 µF (X7R Ceramic), $T_A$ = +25°C. **Boldface** type applies for junction temperatures, $T_J$ (**Note 7**) of **-40°C to +125°C**

| Parameters | Sym. | Min. | Typ. | Max. | Units | Conditions |
|---|---|---|---|---|---|---|
| Thermal Shutdown Temperature | $T_{SD}$ | — | 150 | — | °C | $I_{OUT}$ = 100 µA, $V_{OUT}$ = 1.8V, $V_{IN}$ = 2.8V |
| Thermal Shutdown Hysteresis | $\Delta T_{SD}$ | — | 10 | — | °C | $I_{OUT}$ = 100 µA, $V_{OUT}$ = 1.8V, $V_{IN}$ = 2.8V |

**Note 1:** The minimum $V_{IN}$ must meet two conditions: $V_{IN} \geq 2.3V$ and $V_{IN} \geq V_{OUT(MAX)} + V_{DROPOUT(MAX)}$.

**2:** $V_R$ is the nominal regulator output voltage for the fixed cases. $V_R$ = 1.2V, 1.8V, etc. $V_R$ is the desired set point output voltage for the adjustable cases. $V_R = V_{ADJ} * ((R_1/R_2)+1)$. Figure 4-1.

**3:** $TCV_{OUT} = (V_{OUT-HIGH} - V_{OUT-LOW}) *10^6 / (V_R * \Delta Temperature)$. $V_{OUT-HIGH}$ is the highest voltage measured over the temperature range. $V_{OUT-LOW}$ is the lowest voltage measured over the temperature range.

**4:** Load regulation is measured at a constant junction temperature using low duty-cycle pulse testing. Load regulation is tested over a load range from 1 mA to the maximum specified output current.

**5:** Dropout voltage is defined as the input-to-output voltage differential at which the output voltage drops 2% below its nominal value that was measured with an input voltage of $V_{IN} = V_{OUTMAX} + V_{DROPOUT(MAX)}$.

**6:** The maximum allowable power dissipation is a function of ambient temperature, the maximum allowable junction temperature and the thermal resistance from junction to air. (i.e., $T_A$, $T_J$, $\theta_{JA}$). Exceeding the maximum allowable power dissipation will cause the device operating junction temperature to exceed the maximum +150°C rating. Sustained junction temperatures above 150°C can impact device reliability.

**7:** The junction temperature is approximated by soaking the device under test at an ambient temperature equal to the desired junction temperature. The test time is small enough such that the rise in the junction temperature over the ambient temperature is not significant.

## TEMPERATURE SPECIFICATIONS

**Electrical Specifications:** Unless otherwise indicated, all limits apply for $V_{IN}$ = 2.3V to 6.0V.

| Parameters | Sym. | Min. | Typ. | Max. | Units | Conditions |
|---|---|---|---|---|---|---|
| **Temperature Ranges** | | | | | | |
| Operating Junction Temperature Range | $T_J$ | -40 | — | +125 | °C | Steady State |
| Maximum Junction Temperature | $T_J$ | — | — | +150 | °C | Transient |
| Storage Temperature Range | $T_A$ | -65 | — | +150 | °C | |
| **Thermal Package Resistances** | | | | | | |
| Thermal Resistance, 5LD DDPAK | $\theta_{JA}$ | — | 31.2 | — | °C/W | 4-Layer JC51 Standard Board |
| Thermal Resistance, 3LD DDPAK | $\theta_{JA}$ | — | 31.4 | — | °C/W | 4-Layer JC51 Standard Board |
| Thermal Resistance, 5LD TO-220 | $\theta_{JA}$ | — | 29.3 | — | °C/W | 4-Layer JC51 Standard Board |
| Thermal Resistance, 3LD TO-220 | $\theta_{JA}$ | — | 29.4 | — | °C/W | 4-Layer JC51 Standard Board |


© 2006-2013 Microchip Technology Inc.

## 2.0 TYPICAL PERFORMANCE CURVES

**Note:** The graphs and tables provided following this note are a statistical summary based on a limited number of samples and are provided for informational purposes only. The performance characteristics listed herein are not tested or guaranteed. In some graphs or tables, the data presented may be outside the specified operating range (e.g., outside specified power supply range) and therefore outside the warranted range.

**Note:** Unless otherwise indicated, $V_{OUT}$ = 1.8V (Adjustable), $V_{IN}$ = 2.8V, $C_{OUT}$ = 4.7 µF Ceramic (X7R), $C_{IN}$ = 4.7 µF Ceramic (X7R), $I_{OUT}$ = 1 mA, Temperature = +25°C, $V_{IN}$ = $V_{OUT}$ + 0.6V, $R_{PWRGD}$ = 10 kΩ To $V_{IN}$.

**Note**: Junction Temperature ($T_J$) is approximated by soaking the device under test to an ambient temperature equal to the desired Junction temperature. The test time is small enough such that the rise in Junction temperature over the Ambient temperature is not significant.

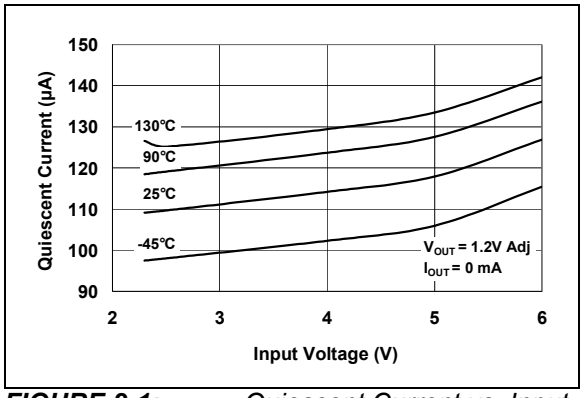


***FIGURE 2-1:*** *Quiescent Current vs. Input Voltage (1.2V Adjustable).*

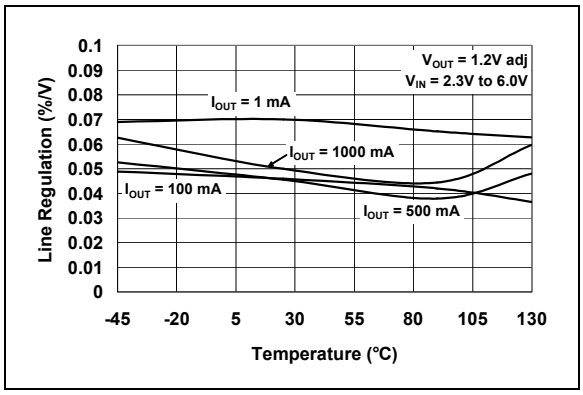


***FIGURE 2-4:*** *Line Regulation vs. Temperature (1.2V Adjustable).*

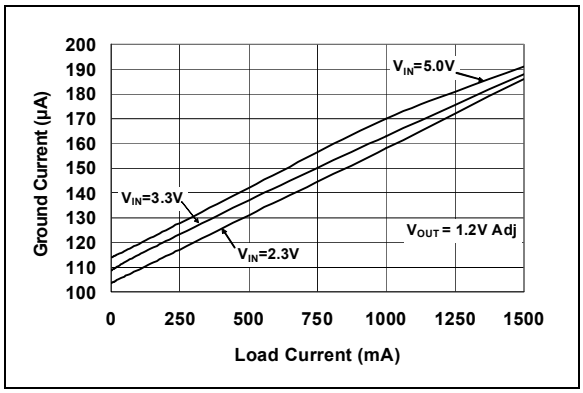


***FIGURE 2-2:*** *Ground Current vs. Load Current (1.2V Adjustable).*

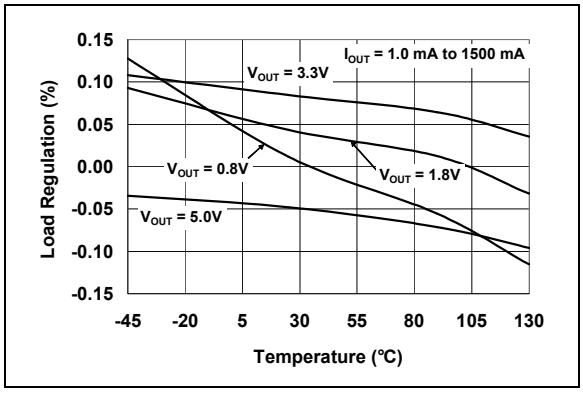


***FIGURE 2-5:*** *Load Regulation vs. Temperature (Adjustable Version).*

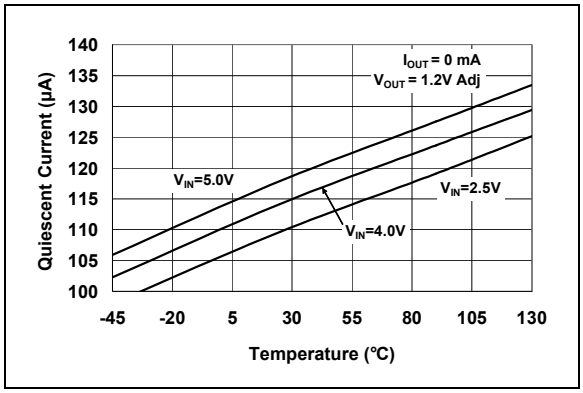


***FIGURE 2-3:*** *Quiescent Current vs. Junction Temperature (1.2V Adjustable).*

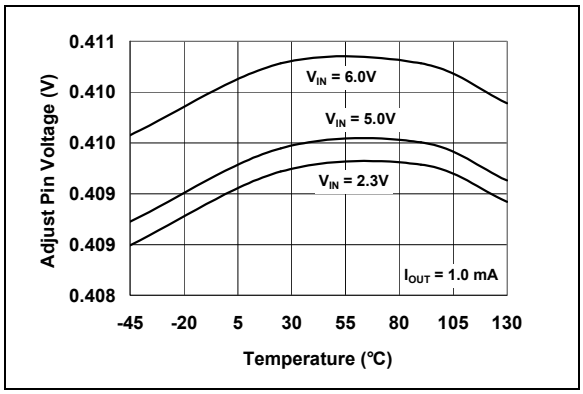


***FIGURE 2-6:*** *Adjust Pin Voltage vs. Temperature.*

**Note:** Unless otherwise indicated, $V_{OUT}$ = 1.8V (Adjustable), $V_{IN}$ = 2.8V, $C_{OUT}$ = 4.7 µF Ceramic (X7R), $C_{IN}$ = 4.7 µF Ceramic (X7R), $I_{OUT}$ = 1 mA, Temperature = +25°C, $V_{IN}$ = $V_{OUT}$ + 0.6V, $R_{PWRGD}$ = 10 kΩ To $V_{IN}$.

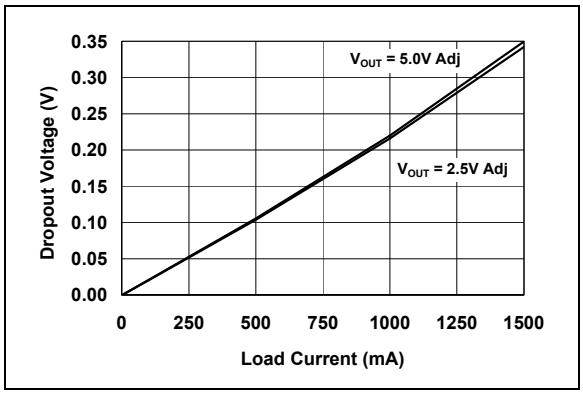


***FIGURE 2-7:*** *Dropout Voltage vs. Load Current (Adjustable Version).*

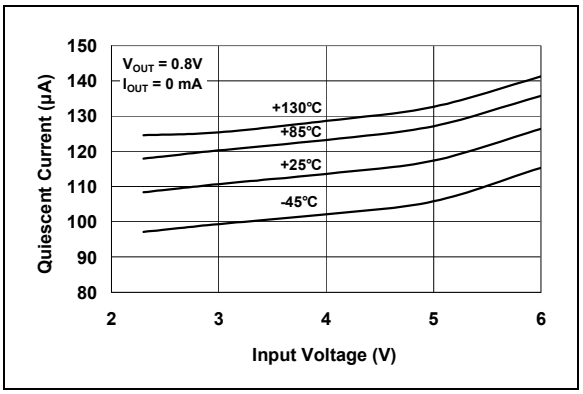


***FIGURE 2-10:*** *Quiescent Current vs. Input Voltage (0.8V Fixed).*

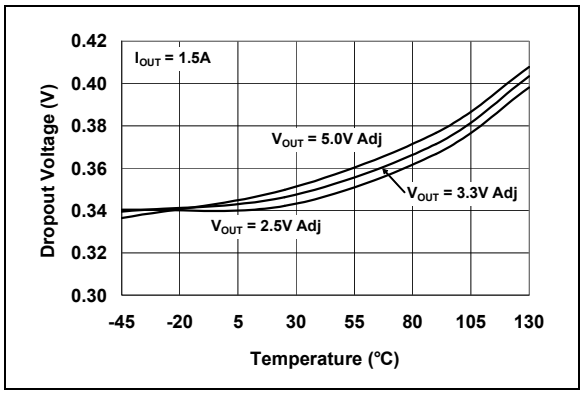


***FIGURE 2-8:*** *Dropout Voltage vs. Temperature (Adjustable Version).*

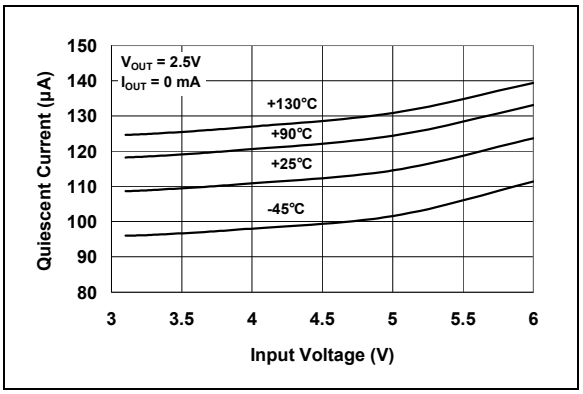


***FIGURE 2-11:*** *Quiescent Current vs. Input Voltage (2.5V Fixed).*

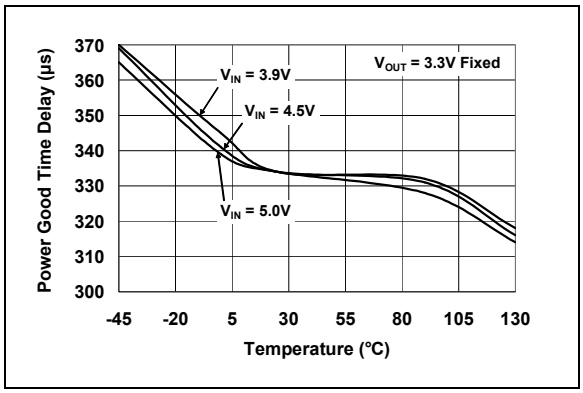


***FIGURE 2-9:*** *Power Good (PWRGD) Time Delay vs. Temperature (Adjustable Version).*

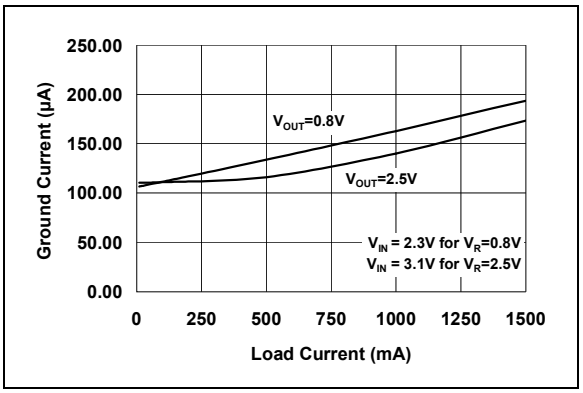


***FIGURE 2-12:*** *Ground Current vs. Load Current.*


© 2006-2013 Microchip Technology Inc.

**Note:** Unless otherwise indicated, $V_{OUT}$ = 1.8V (Adjustable), $V_{IN}$ = 2.8V, $C_{OUT}$ = 4.7 µF Ceramic (X7R), $C_{IN}$ = 4.7 µF Ceramic (X7R), $I_{OUT}$ = 1 mA, Temperature = +25°C, $V_{IN} = V_{OUT}$ + 0.6V, $R_{PWRGD}$ = 10 kΩ To $V_{IN}$.

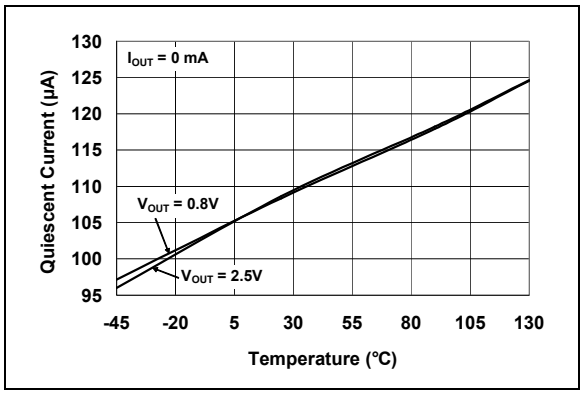


***FIGURE 2-13:*** *Quiescent Current vs. Temperature.*

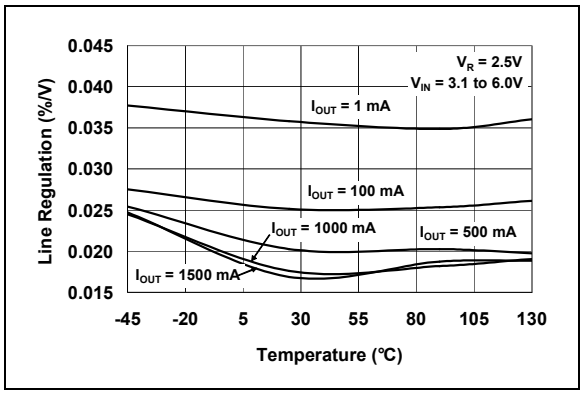


***FIGURE 2-16:*** *Line Regulation vs. Temperature (2.5V Fixed).*

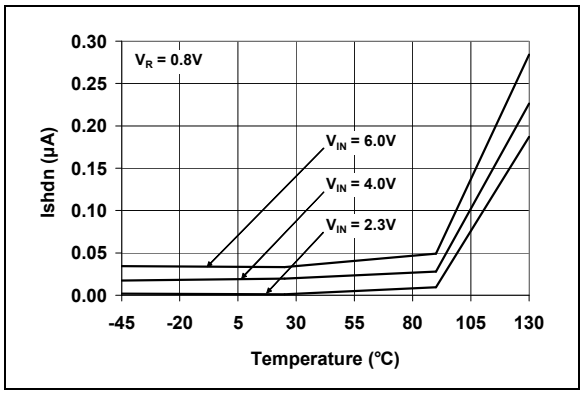


***FIGURE 2-14:*** *$I_{\overline{SHDN}}$ vs. Temperature.*

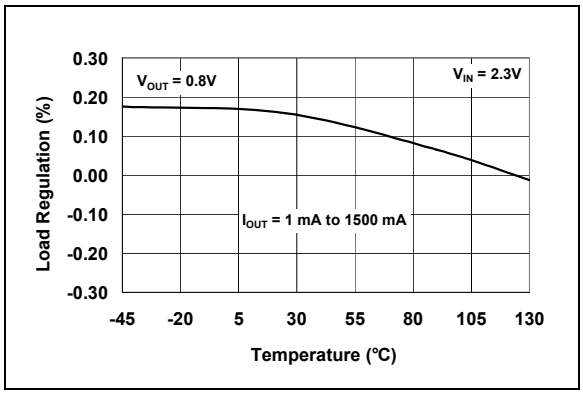


***FIGURE 2-17:*** *Load Regulation vs. Temperature ($V_{OUT}$ < 2.5V Fixed).*

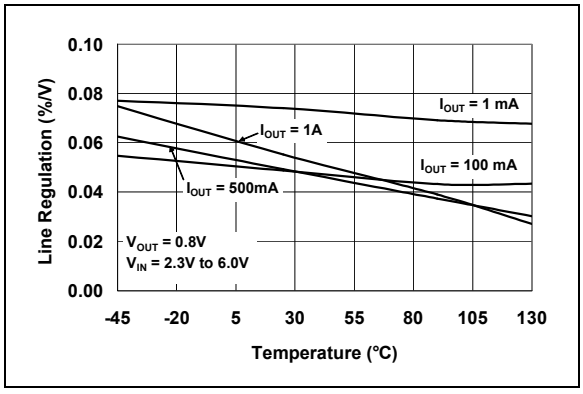


***FIGURE 2-15:*** *Line Regulation vs. Temperature (0.8V Fixed).*

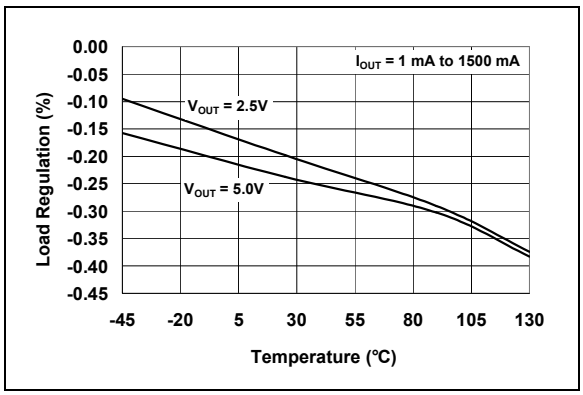


***FIGURE 2-18:*** *Load Regulation vs. Temperature ($V_{OUT} \geq$ 2.5V Fixed).*

**Note:** Unless otherwise indicated, $V_{OUT}$ = 1.8V (Adjustable), $V_{IN}$ = 2.8V, $C_{OUT}$ = 4.7 µF Ceramic (X7R), $C_{IN}$ = 4.7 µF Ceramic (X7R), $I_{OUT}$ = 1 mA, Temperature = +25°C, $V_{IN}$ = $V_{OUT}$ + 0.6V, $R_{PWRGD}$ = 10 kΩ To $V_{IN}$.

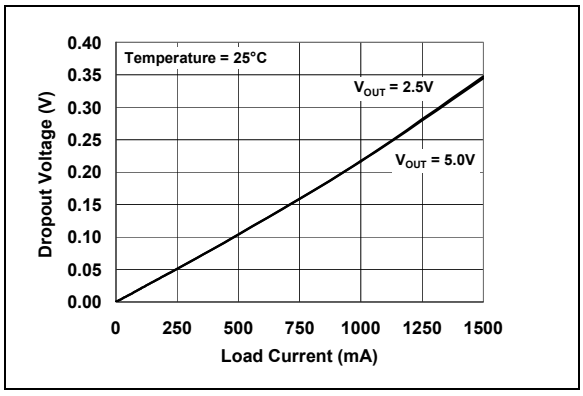


***FIGURE 2-19:*** *Dropout Voltage vs. Load Current.*

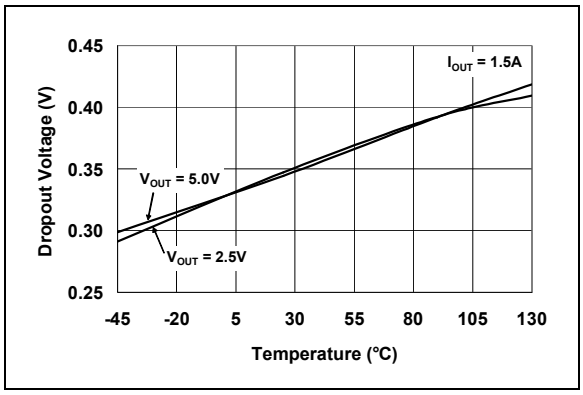


***FIGURE 2-20:*** *Dropout Voltage vs. Temperature.*

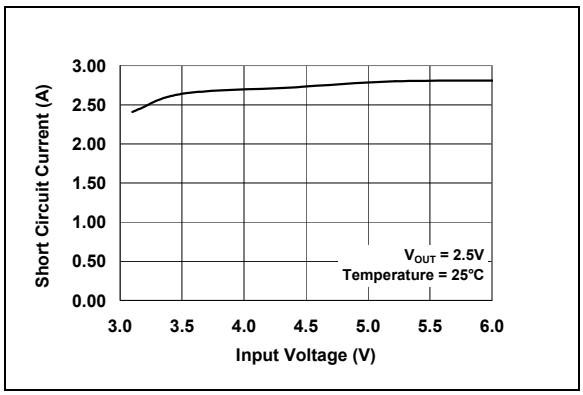


***FIGURE 2-21:*** *Short Circuit Current vs. Input Voltage.*

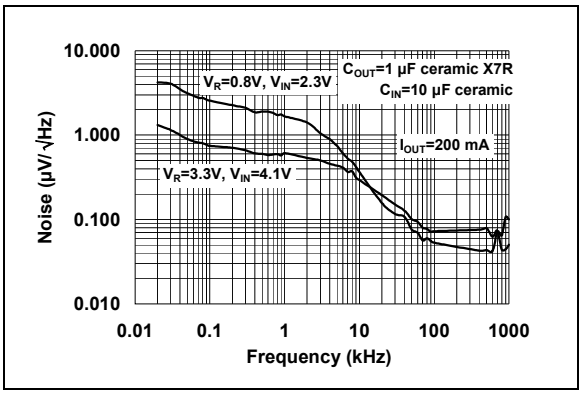


***FIGURE 2-22:*** *Output Noise Voltage Density vs. Frequency.*

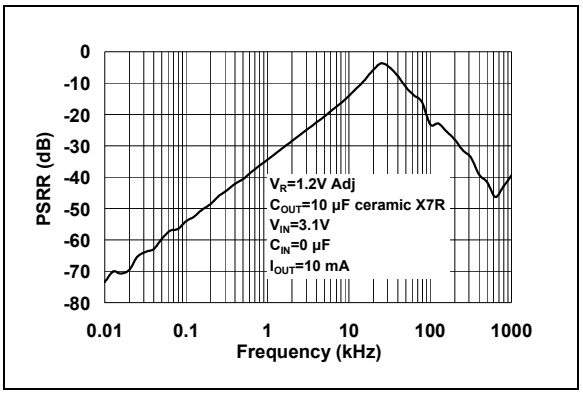


***FIGURE 2-23:*** *Power Supply Ripple Rejection (PSRR) vs. Frequency ($V_{OUT}$ = 1.2V Adj.).*

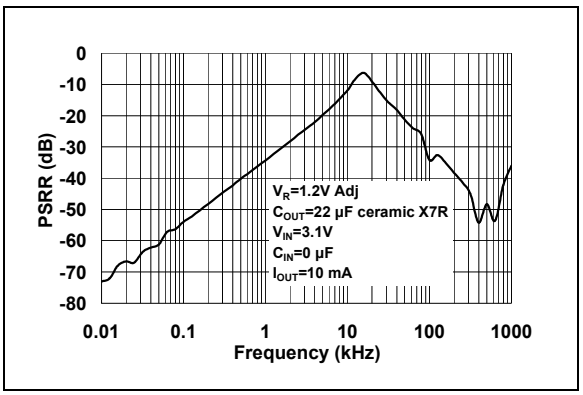


***FIGURE 2-24:*** *Power Supply Ripple Rejection (PSRR) vs. Frequency ($V_{OUT}$ = 1.2V Adj.).*


© 2006-2013 Microchip Technology Inc.

**Note:** Unless otherwise indicated, $V_{OUT}$ = 1.8V (Adjustable), $V_{IN}$ = 2.8V, $C_{OUT}$ = 4.7 µF Ceramic (X7R), $C_{IN}$ = 4.7 µF Ceramic (X7R), $I_{OUT}$ = 1 mA, Temperature = +25°C, $V_{IN}$ = $V_{OUT}$ + 0.6V, $R_{PWRGD}$ = 10 kΩ To $V_{IN}$.

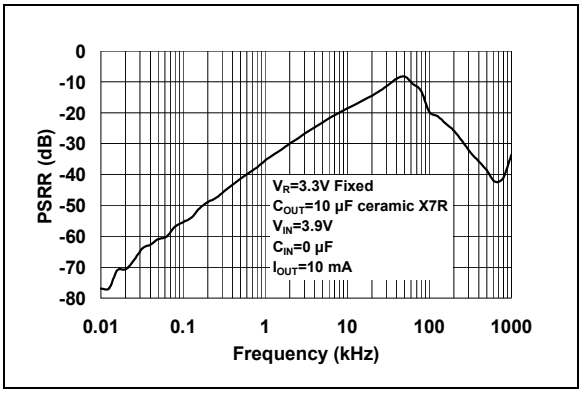


***FIGURE 2-25:*** *Power Supply Ripple Rejection (PSRR) vs. Frequency ($V_{OUT}$ = 3.3V Fixed).*

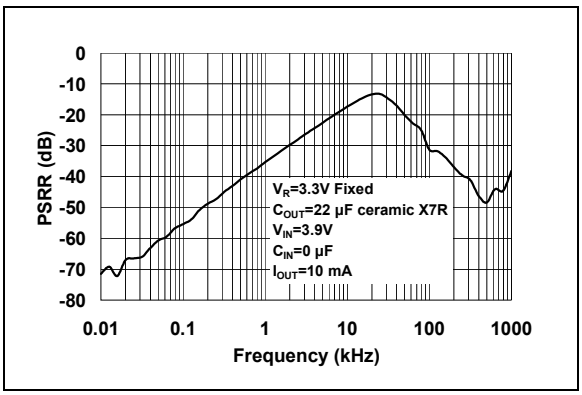


***FIGURE 2-26:*** *Power Supply Ripple Rejection (PSRR) vs. Frequency ($V_{OUT}$ = 3.3V Fixed).*

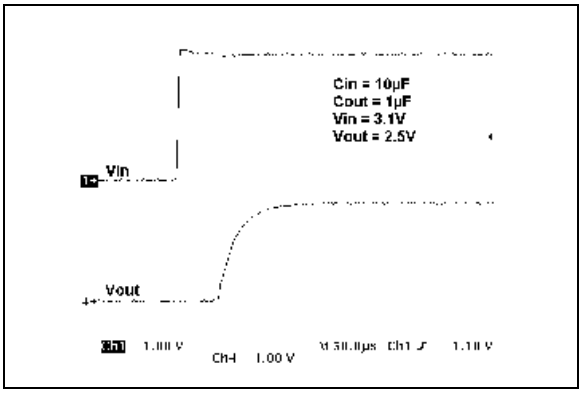


***FIGURE 2-27:*** *2.5V (Adj.) Startup from $V_{IN}$.*

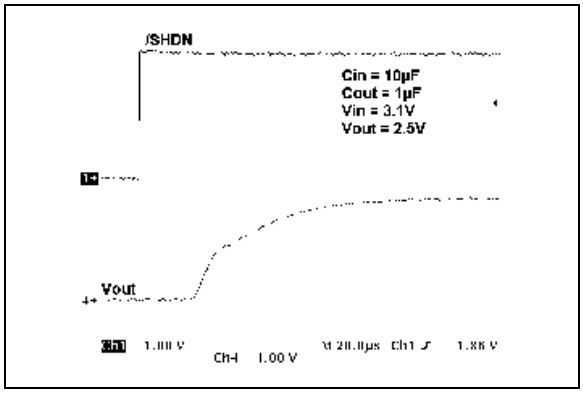


***FIGURE 2-28:*** *2.5V (Adj.) Startup from Shutdown.*

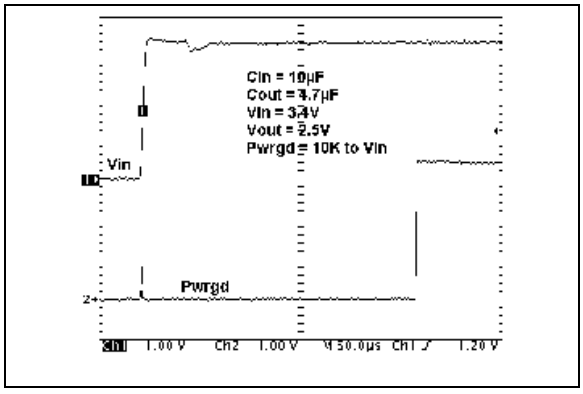


***FIGURE 2-29:*** *Power Good (PWRGD) Timing.*

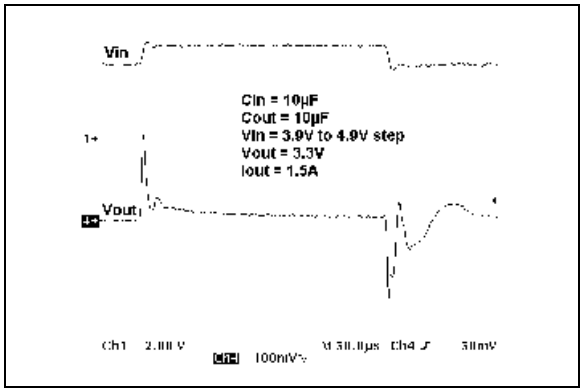


***FIGURE 2-30:*** *Dynamic Line Response (3.3V Fixed).*

**Note:** Unless otherwise indicated, $V_{OUT}$ = 1.8V (Adjustable), $V_{IN}$ = 2.8V, $C_{OUT}$ = 4.7 µF Ceramic (X7R), $C_{IN}$ = 4.7 µF Ceramic (X7R), $I_{OUT}$ = 1 mA, Temperature = +25°C, $V_{IN}$ = $V_{OUT}$ + 0.6V, $R_{PWRGD}$ = 10 kΩ To $V_{IN}$.

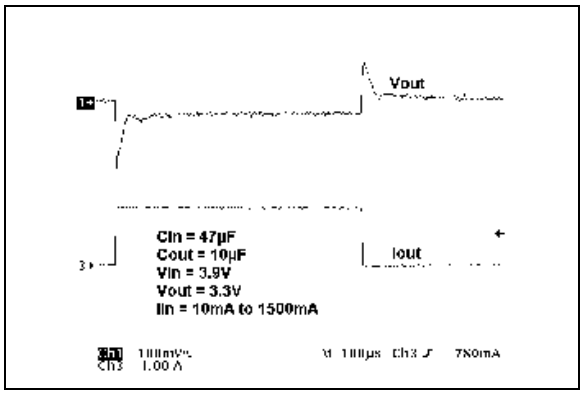


***FIGURE 2-31:*** *Dynamic Load Response (3.3V Fixed, 10 mA to 1500 mA).*

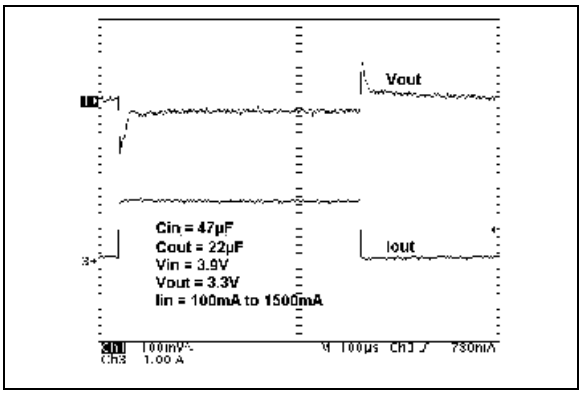


***FIGURE 2-32:*** *Dynamic Load Response (3.3V Fixed, 100 mA to 1500 mA).*


© 2006-2013 Microchip Technology Inc.

## 3.0 PIN DESCRIPTION

The descriptions of the pins are listed in Table 3-1.

**TABLE 3-1: PIN FUNCTION TABLE**

| 3-Pin Fixed Output | 5-Pin Fixed Output | Adjustable Output | Name | Description |
|---|---|---|---|---|
| — | 1 | 1 | $\overline{SHDN}$ | Shutdown Control Input (active-low) |
| 1 | 2 | 2 | $V_{IN}$ | Input Voltage Supply |
| 2 | 3 | 3 | GND | Ground |
| 3 | 4 | 4 | $V_{OUT}$ | Regulated Output Voltage |
| — | 5 | — | PWRGD | Power Good Output |
| — | — | 5 | ADJ | Voltage Adjust/Sense Input |
| Pad | Pad | Pad | EP | Exposed Pad of the Package (ground potential) |

### 3.1 Input Voltage Supply ($V_{IN}$)

Connect the unregulated or regulated input voltage source to $V_{IN}$. If the input voltage source is located several inches away from the LDO, or the input source is a battery, it is recommended that an input capacitor be used. A typical input capacitance value of 1 µF to 10 µF should be sufficient for most applications.

### 3.2 Shutdown Control Input ($\overline{SHDN}$)

The $\overline{SHDN}$ input is used to turn the LDO output voltage on and off. When the $\overline{SHDN}$ input is at a logic-high level, the LDO output voltage is enabled. When the $\overline{SHDN}$ input is pulled to a logic-low level, the LDO output voltage is disabled. When the $\overline{SHDN}$ input is pulled low, the PWRGD output also goes low and the LDO enters a low quiescent current shutdown state where the typical quiescent current is 0.1 µA.

### 3.3 Ground (GND)

Connect the GND pin of the LDO to a quiet circuit ground. This will help the LDO power supply rejection ratio and noise performance. The ground pin of the LDO only conducts the quiescent current of the LDO (typically 120 µA), so a heavy trace is not required. For applications have switching or noisy inputs tie the GND pin to the return of the output capacitor. Ground planes help lower inductance and voltage spikes caused by fast transient load currents and are recommended for applications that are subjected to fast load transients.

### 3.4 Power Good Output (PWRGD)

The PWRGD output is an open-drain output used to indicate when the LDO output voltage is within 92% (typically) of its nominal regulation value. The PWRGD threshold has a typical hysteresis value of 2%. The PWRGD output is delayed by 200 µs (typical) from the time the LDO output is within 92% + 3% (max hysteresis) of the regulated output value on power-up. This delay time is internally fixed.

### 3.5 Output Voltage Adjust Input (ADJ)

For adjustable applications, the output voltage is connected to the ADJ input through a resistor divider that sets the output voltage regulation value. This provides the user the capability to set the output voltage to any value they desire within the 0.8V to 5.0V range of the device.

### 3.6 Regulated Output Voltage ($V_{OUT}$)

The $V_{OUT}$ pin is the regulated output voltage of the LDO. A minimum output capacitance of 1.0 µF is required for LDO stability. The MCP1827/MCP1827S is stable with ceramic, tantalum and aluminum-electrolytic capacitors. See **Section 4.3 "Output Capacitor"** for output capacitor selection guidance.

### 3.7 Exposed Pad (EP)

The DDPAK and TO-220 package have an exposed tab on the package. A heat sink may be mount to the tab to aid in the removal of heat from the package during operation. The exposed tab is at the ground potential of the LDO.

© 2006-2013 Microchip Technology Inc.

## 4.0 DEVICE OVERVIEW

The MCP1827/MCP1827S is a high output current, Low Dropout (LDO) voltage regulator. The low dropout voltage of 330 mV typical at 1.5A of current makes it ideal for battery-powered applications. Unlike other high output current LDOs, the MCP1827/MCP1827S only draws a maximum of 220 µA of quiescent current. The MCP1827 has a shutdown control input and a power good output.

### 4.1 LDO Output Voltage

The 5-pin MCP1827 LDO is available with either a fixed output voltage or an adjustable output voltage. The output voltage range is 0.8V to 5.0V for both versions. The 3-pin MCP1827S LDO is available as a fixed voltage device.

#### 4.1.1 ADJUST INPUT

The adjustable version of the MCP1827 uses the ADJ pin (pin 5) to get the output voltage feedback for output voltage regulation. This allows the user to set the output voltage of the device with two external resistors. The nominal voltage for ADJ is 0.41V.

Figure 4-1 shows the adjustable version of the MCP1827. Resistors $R_1$ and $R_2$ form the resistor divider network necessary to set the output voltage. With this configuration, the equation for setting $V_{OUT}$ is:

**EQUATION 4-1:**

$$V_{OUT} = V_{ADJ}\left(\frac{R_1 + R_2}{R_2}\right)$$

Where:

$V_{OUT}$ = LDO Output Voltage

$V_{ADJ}$ = ADJ Pin Voltage (typically 0.41V)

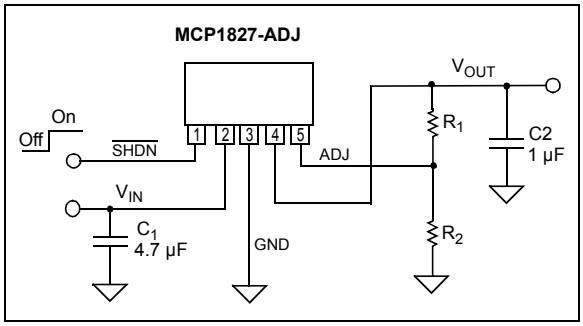


***FIGURE 4-1:*** *Typical adjustable output voltage application circuit.*

The allowable resistance value range for resistor $R_2$ is from 10 kΩ to 200 kΩ. Solving the equation for $R_1$ yields the following equation:

**EQUATION 4-2:**

$$R_1 = R_2\left(\frac{V_{OUT} - V_{ADJ}}{V_{ADJ}}\right)$$

Where:

$V_{OUT}$ = LDO Output Voltage

$V_{ADJ}$ = ADJ Pin Voltage (typically 0.41V)

### 4.2 Output Current and Current Limiting

The MCP1827/MCP1827S LDO is tested and ensured to supply a minimum of 1.5A of output current. The MCP1827/MCP1827S has no minimum output load, so the output load current can go to 0 mA and the LDO will continue to regulate the output voltage to within tolerance.

The MCP1827/MCP1827S also incorporates an output current limit. If the output voltage falls below 0.7V due to an overload condition (usually represents a shorted load condition), the output current is limited to 2.2A (typical). If the overload condition is a soft overload, the MCP1827/MCP1827S will supply higher load currents of up to 3A. The MCP1827/MCP1827S should not be operated in this condition continuously as it may result in failure of the device. However, this does allow for device usage in applications that have higher pulsed load currents having an average output current value of 1.5A or less.

Output overload conditions may also result in an over-temperature shutdown of the device. If the junction temperature rises above 150°C, the LDO will shut down the output voltage. See **Section 4.8 "Overtemperature Protection"** for more information on overtemperature shutdown.

### 4.3 Output Capacitor

The MCP1827/MCP1827S requires a minimum output capacitance of 1 µF for output voltage stability. Ceramic capacitors are recommended because of their size, cost and environmental robustness qualities.

Aluminum-electrolytic and tantalum capacitors can be used on the LDO output as well. The Equivalent Series Resistance (ESR) of the electrolytic output capacitor must be no greater than 1 ohm. The output capacitor should be located as close to the LDO output as is practical. Ceramic materials X7R and X5R have low temperature coefficients and are well within the acceptable ESR range required. A typical 1 µF X7R 0805 capacitor has an ESR of 50 milli-ohms.


© 2006-2013 Microchip Technology Inc.

Larger LDO output capacitors can be used with the MCP1827/MCP1827S to improve dynamic performance and power supply ripple rejection. A maximum of 22 µF is recommended. Aluminum-electrolytic capacitors are not recommended for low-temperature applications of ≤ 25°C.

## 4.4 Input Capacitor

Low input source impedance is necessary for the LDO output to operate properly. When operating from batteries, or in applications with long lead length (> 10 inches) between the input source and the LDO, some input capacitance is recommended. A minimum of 1.0 µF to 4.7 µF is recommended for most applications.

For applications that have output step load requirements, the input capacitance of the LDO is very important. The input capacitance provides the LDO with a good local low-impedance source to pull the transient currents from in order to respond quickly to the output load step. For good step response performance, the input capacitor should be of equivalent (or higher) value than the output capacitor. The capacitor should be placed as close to the input of the LDO as is practical. Larger input capacitors will also help reduce any high-frequency noise on the input and output of the LDO and reduce the effects of any inductance that exists between the input source voltage and the input capacitance of the LDO.

## 4.5 Power Good Output (PWRGD)

The PWRGD output is used to indicate when the output voltage of the LDO is within 92% (typical value, see **Section 1.0 "Electrical Characteristics"** for Minimum and Maximum specifications) of its nominal regulation value.

As the output voltage of the LDO rises, the PWRGD output will be held low until the output voltage has exceeded the power good threshold plus the hysteresis value. Once this threshold has been exceeded, the power good time delay is started (shown as $T_{PG}$ in the Electrical Characteristics table). The power good time delay is fixed at 200 µs (typical). After the time delay period, the PWRGD output will go high, indicating that the output voltage is stable and within regulation limits.

If the output voltage of the LDO falls below the power good threshold, the power good output will transition low. The power good circuitry has a 170 µs delay when detecting a falling output voltage, which helps to increase noise immunity of the power good output and avoid false triggering of the power good output during fast output transients. See Figure 4-2 for power good timing characteristics.

When the LDO is put into Shutdown mode using the $\overline{SHDN}$ input, the power good output is pulled low immediately, indicating that the output voltage will be out of regulation. The timing diagram for the power good output when using the shutdown input is shown in Figure 4-3.

The power good output is an open-drain output that can be pulled up to any voltage that is equal to or less than the LDO input voltage. This output is capable of sinking 1.2 mA ($V_{PWRGD}$ < 0.4V maximum).

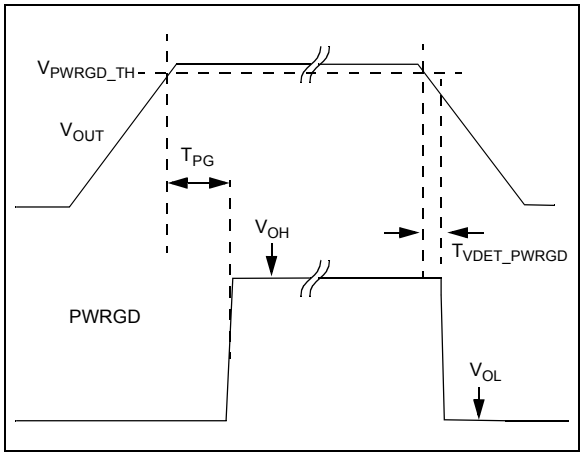


***FIGURE 4-2:*** *Power Good Timing.*

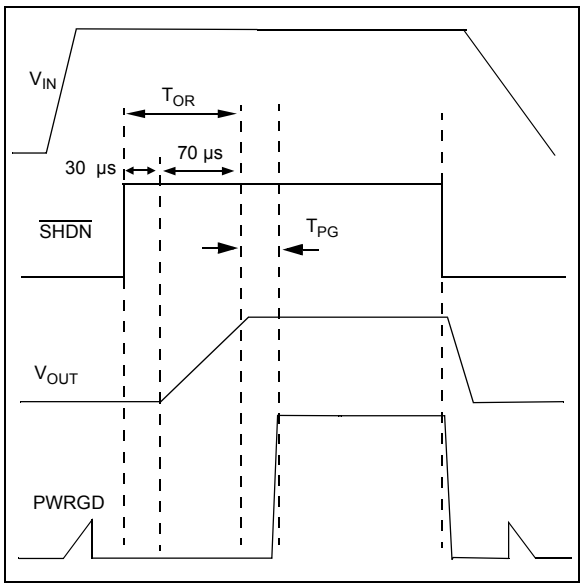


***FIGURE 4-3:*** *Power Good Timing from Shutdown.*

## 4.6 Shutdown Input ($\overline{SHDN}$)

The $\overline{SHDN}$ input is an active-low input signal that turns the LDO on and off. The $\overline{SHDN}$ threshold is a percentage of the input voltage. The typical value of this shutdown threshold is 30% of $V_{IN}$, with minimum and maximum limits over the entire operating temperature range of 45% and 15%, respectively.

The $\overline{SHDN}$ input will ignore low-going pulses (pulses meant to shut down the LDO) that are up to 400 ns in pulse width. If the shutdown input is pulled low for more than 400 ns, the LDO will enter Shutdown mode. This small bit of filtering helps to reject any system noise spikes on the shutdown input signal.

On the rising edge of the $\overline{SHDN}$ input, the shutdown circuitry has a 30 µs delay before allowing the LDO output to turn on. This delay helps to reject any false turn-on signals or noise on the $\overline{SHDN}$ input signal. After the 30 µs delay, the LDO output enters its soft-start period as it rises from 0V to its final regulation value. If the $\overline{SHDN}$ input signal is pulled low during the 30 µs delay period, the timer will be reset and the delay time will start over again on the next rising edge of the $\overline{SHDN}$ input. The total time from the $\overline{SHDN}$ input going high (turn-on) to the LDO output being in regulation is typically 100 µs. See Figure 4-4 for a timing diagram of the $\overline{SHDN}$ input.

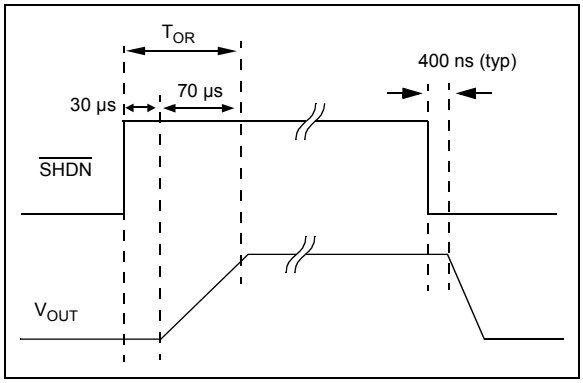


***FIGURE 4-4:*** *Shutdown Input Timing Diagram.*

## 4.7 Dropout Voltage and Undervoltage Lockout

Dropout voltage is defined as the input-to-output voltage differential at which the output voltage drops 2% below the nominal value that was measured with a $V_R$ + 0.6V differential applied. The MCP1827/MCP1827S LDO has a very low dropout voltage specification of 330 mV (typical) at 1.5A of output current. See **Section 1.0 "Electrical Characteristics"** for maximum dropout voltage specifications.

The MCP1827/MCP1827S LDO operates across an input voltage range of 2.3V to 6.0V and incorporates input Undervoltage Lockout (UVLO) circuitry that keeps the LDO output voltage off until the input voltage reaches a minimum of 2.18V (typical) on the rising edge of the input voltage. As the input voltage falls, the LDO output will remain on until the input voltage level reaches 2.04V (typical).

Since the MCP1827/MCP1827S LDO undervoltage lockout activates at 2.04V as the input voltage is falling, the dropout voltage specification does not apply for output voltages that are less than 1.9V.

For high-current applications, voltage drops across the PCB traces must be taken into account. The trace resistances can cause significant voltage drops between the input voltage source and the LDO. For applications with input voltages near 2.3V, these PCB trace voltage drops can sometimes lower the input voltage enough to trigger a shutdown due to undervoltage lockout.

## 4.8 Overtemperature Protection

The MCP1827/MCP1827S LDO has temperature-sensing circuitry to prevent the junction temperature from exceeding approximately 150°C. If the LDO junction temperature does reach 150°C, the LDO output will be turned off until the junction temperature cools to approximately 140°C, at which point the LDO output will automatically resume normal operation. If the internal power dissipation continues to be excessive, the device will again shut off. The junction temperature of the die is a function of power dissipation, ambient temperature and package thermal resistance. See **Section 5.0 "Application Circuits/ Issues"** for more information on LDO power dissipation and junction temperature.


© 2006-2013 Microchip Technology Inc.

# 5.0 APPLICATION CIRCUITS/ ISSUES

## 5.1 Typical Application

The MCP1827/MCP1827S is used for applications that require high LDO output current and a power good output.

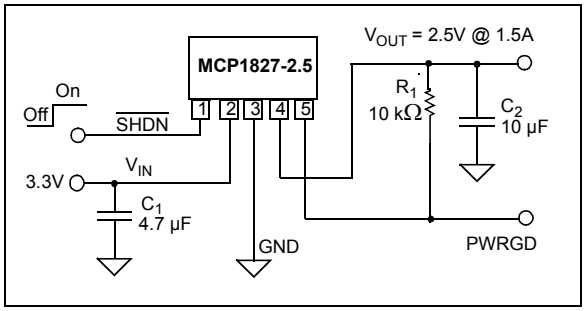


***FIGURE 5-1:*** *Typical Application Circuit.*

### 5.1.1 APPLICATION CONDITIONS

| | |
|---|---|
| Package Type = | TO-220-5 |
| Input Voltage Range = | 3.3V ± 5% |
| $V_{IN}$ maximum = | 3.465V |
| $V_{IN}$ minimum = | 3.135V |
| $V_{DROPOUT\ (max)}$ = | 0.600V |
| $V_{OUT}$ (typical) = | 2.5V |
| $I_{OUT}$ = | 1.5A maximum |
| $P_{DISS}$ (typical) = | 1.2W |
| Temperature Rise = | 35.2°C |

## 5.2 Power Calculations

### 5.2.1 POWER DISSIPATION

The internal power dissipation within the MCP1827/ MCP1827S is a function of input voltage, output voltage, output current and quiescent current. Equation 5-1 can be used to calculate the internal power dissipation for the LDO.

**EQUATION 5-1:**

$$P_{LDO} = (V_{INMAX)} - V_{OUT(MIN)}) \times I_{OUT(MAX)}$$

Where:

| | | |
|---|---|---|
| $P_{LDO}$ | = | LDO Pass device internal power dissipation |
| $V_{IN(MAX)}$ | = | Maximum input voltage |
| $V_{OUT(MIN)}$ | = | LDO minimum output voltage |

In addition to the LDO pass element power dissipation, there is power dissipation within the MCP1827/ MCP1827S as a result of quiescent or ground current. The power dissipation as a result of the ground current can be calculated using the following equation:

**EQUATION 5-2:**

$$P_{I(GND)} = V_{IN(MAX)} \times I_{VIN}$$

Where:

| | | |
|---|---|---|
| $P_{I(GND}$ | = | Power dissipation due to the quiescent current of the LDO |
| $V_{IN(MAX)}$ | = | Maximum input voltage |
| $I_{VIN}$ | = | Current flowing in the $V_{IN}$ pin with no LDO output current (LDO quiescent current) |

The total power dissipated within the MCP1827/ MCP1827S is the sum of the power dissipated in the LDO pass device and the $P(I_{GND})$ term. Because of the CMOS construction, the typical $I_{GND}$ for the MCP1827/ MCP1827S is 120 µA. Operating at a maximum of 3.465V results in a power dissipation of 0.49 milli-Watts. For most applications, this is small compared to the LDO pass device power dissipation and can be neglected.

The maximum continuous operating junction temperature specified for the MCP1827/MCP1827S is +125°C. To estimate the internal junction temperature of the MCP1827/MCP1827S, the total internal power dissipation is multiplied by the thermal resistance from junction to ambient ($R\theta_{JA}$) of the device. The thermal resistance from junction to ambient for the TO-220-5 package is estimated at 29.3° C/W.

**EQUATION 5-3:**

$$T_{J(MAX)} = P_{TOTAL} \times R\theta_{JA} + T_{A(MAX)}$$

| | | |
|---|---|---|
| $T_{J(MAX)}$ | = | Maximum continuous junction temperature |
| $P_{TOTAL}$ | = | Total device power dissipation |
| $R\theta_{JA}$ | = | Thermal resistance from junction to ambient |
| $T_{A(MAX)}$ | = | Maximum ambient temperature |

The maximum power dissipation capability for a package can be calculated given the junction-to-ambient thermal resistance and the maximum ambient temperature for the application. Equation 5-4 can be used to determine the package maximum internal power dissipation.

**EQUATION 5-4:**

$$P_{D(MAX)} = \frac{(T_{J(MAX)} - T_{A(MAX)})}{R\theta_{JA}}$$

$P_{D(MAX)}$ = Maximum device power dissipation
$T_{J(MAX)}$ = maximum continuous junction temperature
$T_{A(MAX)}$ = maximum ambient temperature
$R\theta_{JA}$ = Thermal resistance from junction to ambient

**EQUATION 5-5:**

$$T_{J(RISE)} = P_{D(MAX)} \times R\theta_{JA}$$

$T_{J(RISE)}$ = Rise in device junction temperature over the ambient temperature
$P_{D(MAX)}$ = Maximum device power dissipation
$R\theta_{JA}$ = Thermal resistance from junction to ambient

**EQUATION 5-6:**

$$T_J = T_{J(RISE)} + T_A$$

$T_J$ = Junction temperature
$T_{J(RISE)}$ = Rise in device junction temperature over the ambient temperature
$T_A$ = Ambient temperature

## 5.3 Typical Application

Internal power dissipation, junction temperature rise, junction temperature and maximum power dissipation is calculated in the following example. The power dissipation as a result of ground current is small enough to be neglected.

### 5.3.1 POWER DISSIPATION EXAMPLE

**Package**

Package Type = TO-220-5

**Input Voltage**

$V_{IN}$ = 3.3V ± 5%

**LDO Output Voltage and Current**

$V_{OUT}$ = 2.5V

$I_{OUT}$ = 1.5A

**Maximum Ambient Temperature**

$T_{A(MAX)}$ = 60°C

**Internal Power Dissipation**

$P_{LDO(MAX)}$ = ($V_{IN(MAX)}$ – $V_{OUT(MIN)}$) x $I_{OUT(MAX)}$

$P_{LDO}$ = ((3.3V x 1.05) – (2.5V x 0.975)) x 1.5A

$P_{LDO}$ = 1.54 Watts

#### 5.3.1.1 Device Junction Temperature Rise

The internal junction temperature rise is a function of internal power dissipation and the thermal resistance from junction-to-ambient for the application. The thermal resistance from junction-to-ambient ($R\theta_{JA}$) is derived from EIA/JEDEC standards for measuring thermal resistance. The EIA/JEDEC specification is JESD51. The standard describes the test method and board specifications for measuring the thermal resistance from junction to ambient. The actual thermal resistance for a particular application can vary depending on many factors such as copper area and thickness. Refer to AN792, *"A Method to Determine How Much Power a SOT23 Can Dissipate in an Application"* (DS00792), for more information regarding this subject.

$T_{J(RISE)}$ = $P_{TOTAL}$ x $R\theta_{JA}$

$T_{J(RISE)}$ = 1.54 W x 29.3° C/W

$T_{J(RISE)}$ = 45.12°C


© 2006-2013 Microchip Technology Inc.

#### 5.3.1.2 Junction Temperature Estimate

To estimate the internal junction temperature, the calculated temperature rise is added to the ambient or offset temperature. For this example, the worst-case junction temperature is estimated below:

$$T_J = T_{J(RISE)} + T_{A(MAX)}$$
$$T_J = 45.12°C + 60.0°C$$
$$T_J = 105.12°C$$

As you can see from the result, this application will be operating within the maximum operating junction temperature of 125°C.

#### 5.3.1.3 Maximum Package Power Dissipation at 60°C Ambient Temperature

**TO-220-5 (29.3° C/W $R\theta_{JA}$):**

$P_{D(MAX)} = (125°C – 60°C) / 29.3° C/W$

$P_{D(MAX)} = 2.218W$

**DDPAK-5 (31.2°C/Watt $R\theta_{JA}$):**

$P_{D(MAX)} = (125°C – 60°C)/ 31.2° C/W$

$P_{D(MAX)} = 2.083W$

From this table you can see the difference in maximum allowable power dissipation between the TO-220-5 package and the DDPAK-5 package.

## 6.0 PACKAGING INFORMATION

### 6.1 Package Marking Information

3-Lead DDPAK (MCP1827S)

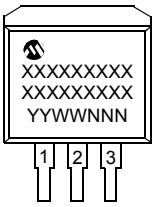


Example:

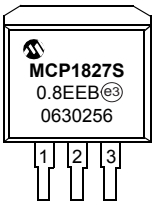


3-Lead TO-220 (MCP1827S)




Example:




5-Lead DDPAK (Fixed) (MCP1827)

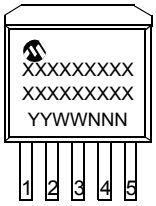


Example:

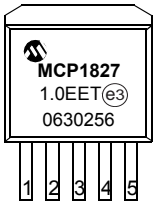


5-Lead TO-220 (Adj) (MCP1827)




Example:




| | | |
|---|---|---|
| **Legend:** | XX...X | Customer-specific information |
| | Y | Year code (last digit of calendar year) |
| | YY | Year code (last 2 digits of calendar year) |
| | WW | Week code (week of January 1 is week ‘01’) |
| | NNN | Alphanumeric traceability code |
| | (e3) | Pb-free JEDEC designator for Matte Tin (Sn) |
| | * | This package is Pb-free. The Pb-free JEDEC designator ((e3)) can be found on the outer packaging for this package. |

**Note**: In the event the full Microchip part number cannot be marked on one line, it will be carried over to the next line, thus limiting the number of available characters for customer-specific information.


© 2006-2013 Microchip Technology Inc.

## 3-Lead Plastic (EB) [DDPAK]

**Note:** For the most current package drawings, please see the Microchip Packaging Specification located at http://www.microchip.com/packaging

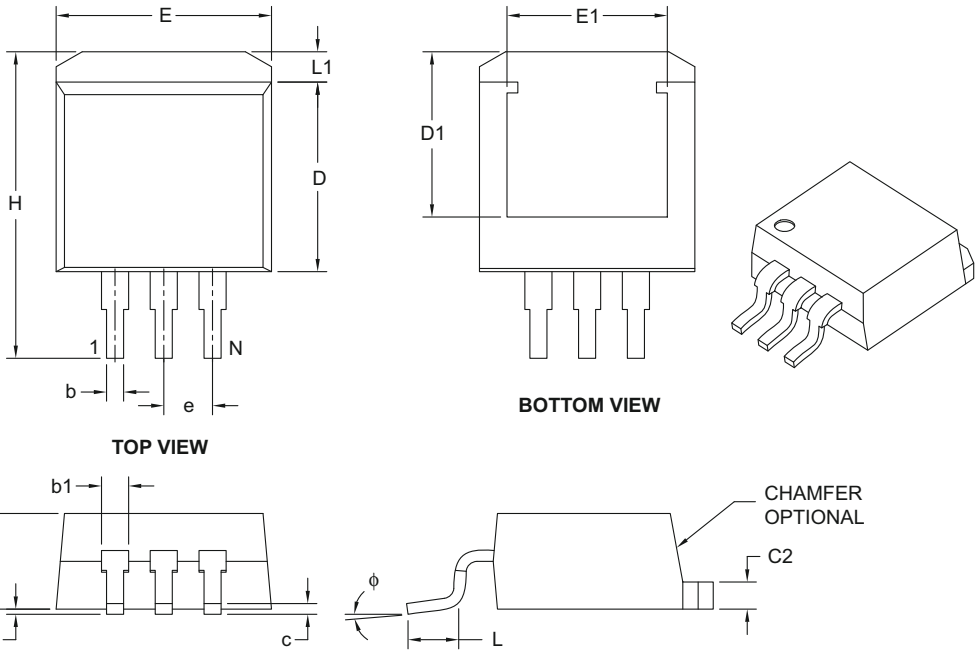


| Units | | INCHES | | |
|---|---|---|---|---|
| Dimension Limits | | MIN | NOM | MAX |
| Number of Pins | N | | 3 | |
| Pitch | e | | .100 BSC | |
| Overall Height | A | .160 | – | .190 |
| Standoff § | A1 | .000 | – | .010 |
| Overall Width | E | .380 | – | .420 |
| Exposed Pad Width | E1 | .245 | – | – |
| Molded Package Length | D | .330 | – | .380 |
| Overall Length | H | .549 | – | .625 |
| Exposed Pad Length | D1 | .270 | – | – |
| Lead Thickness | c | .014 | – | .029 |
| Pad Thickness | C2 | .045 | – | .065 |
| Lower Lead Width | b | .020 | – | .039 |
| Upper Lead Width | b1 | .045 | – | .070 |
| Foot Length | L | .068 | – | .110 |
| Pad Length | L1 | – | – | .067 |
| Foot Angle | ϕ | 0° | – | 8° |

**Notes:**

1. § Significant Characteristic.
2. Dimensions D and E do not include mold flash or protrusions. Mold flash or protrusions shall not exceed .005" per side.
3. Dimensioning and tolerancing per ASME Y14.5M.

BSC: Basic Dimension. Theoretically exact value shown without tolerances.

Microchip Technology Drawing C04-011B

3-Lead Plastic (EB) [DDPAK]

**Note:** For the most current package drawings, please see the Microchip Packaging Specification located at http://www.microchip.com/packaging

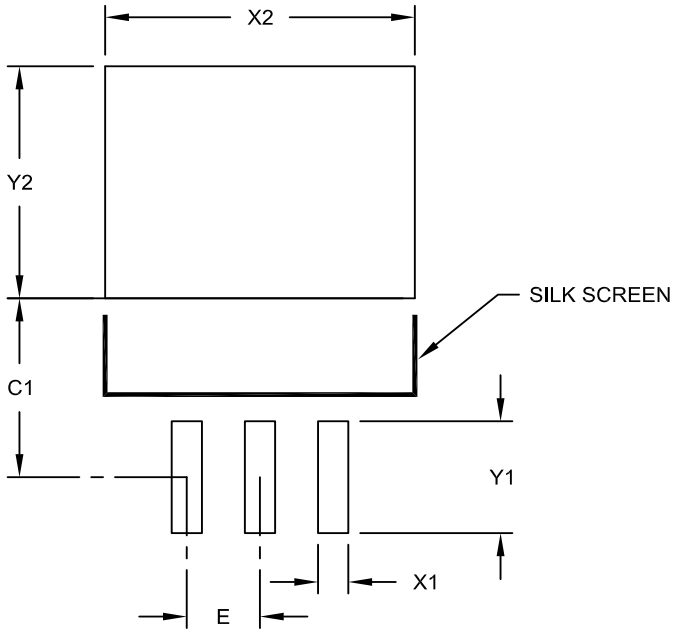


RECOMMENDED LAND PATTERN

| Units | | INCHES | | |
|---|---|---|---|---|
| Dimension Limits | | MIN | NOM | MAX |
| Contact Pitch | E | | .100 BSC | |
| Pad Width | X2 | | | .423 |
| Pad Length | Y2 | | | .327 |
| Contact Pad Spacing | C1 | | .252 | |
| Contact Pad Width (X3) | X1 | | | .041 |
| Contact Pad Length (X3) | Y1 | | | .157 |

Notes:

1. Dimensioning and tolerancing per ASME Y14.5M

BSC: Basic Dimension. Theoretically exact value shown without tolerances.

Microchip Technology Drawing No. C04-2011A


© 2006-2013 Microchip Technology Inc.

## 3-Lead Plastic Transistor Outline (AB) [TO-220]

**Note:** For the most current package drawings, please see the Microchip Packaging Specification located at http://www.microchip.com/packaging

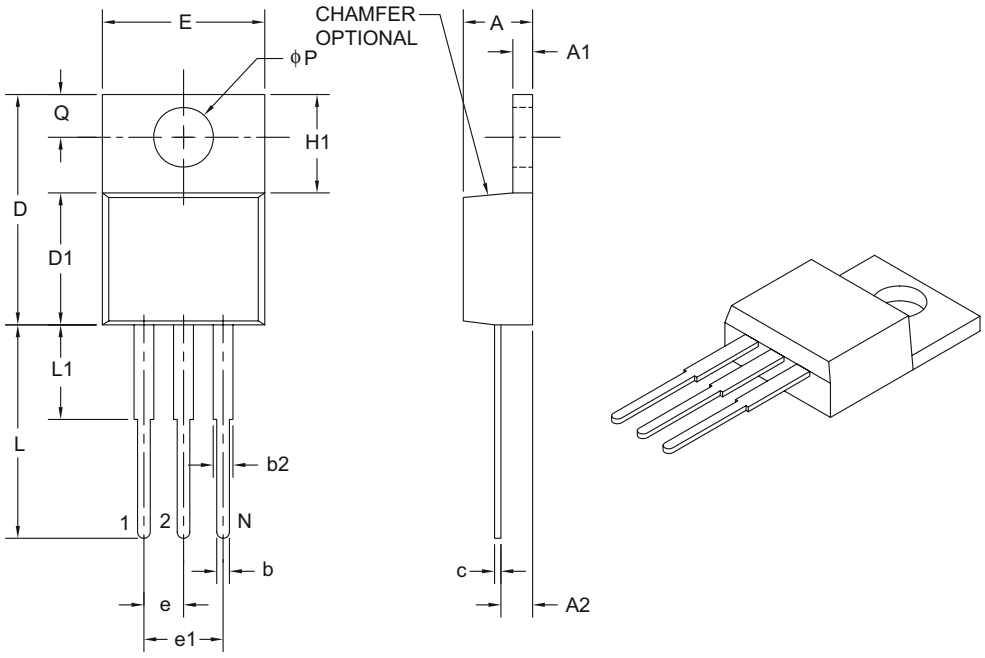


| Units | | INCHES | | |
|---|---|---|---|---|
| Dimension Limits | | MIN | NOM | MAX |
| Number of Pins | N | | 3 | |
| Pitch | e | | .100 BSC | |
| Overall Pin Pitch | e1 | | .200 BSC | |
| Overall Height | A | .140 | – | .190 |
| Tab Thickness | A1 | .020 | – | .055 |
| Base to Lead | A2 | .080 | – | .115 |
| Overall Width | E | .357 | – | .420 |
| Mounting Hole Center | Q | .100 | – | .120 |
| Overall Length | D | .560 | – | .650 |
| Molded Package Length | D1 | .330 | – | .355 |
| Tab Length | H1 | .230 | – | .270 |
| Mounting Hole Diameter | ϕP | .139 | – | .156 |
| Lead Length | L | .500 | – | .580 |
| Lead Shoulder | L1 | – | – | .250 |
| Lead Thickness | c | .012 | – | .024 |
| Lead Width | b | .015 | .027 | .040 |
| Shoulder Width | b2 | .045 | .057 | .070 |

**Notes:**

1. Dimensions D and E do not include mold flash or protrusions. Mold flash or protrusions shall not exceed .005" per side.
2. Dimensioning and tolerancing per ASME Y14.5M.

BSC: Basic Dimension. Theoretically exact value shown without tolerances.

Microchip Technology Drawing C04-034B

## 5-Lead Plastic (ET) [DDPAK]

**Note:** For the most current package drawings, please see the Microchip Packaging Specification located at http://www.microchip.com/packaging

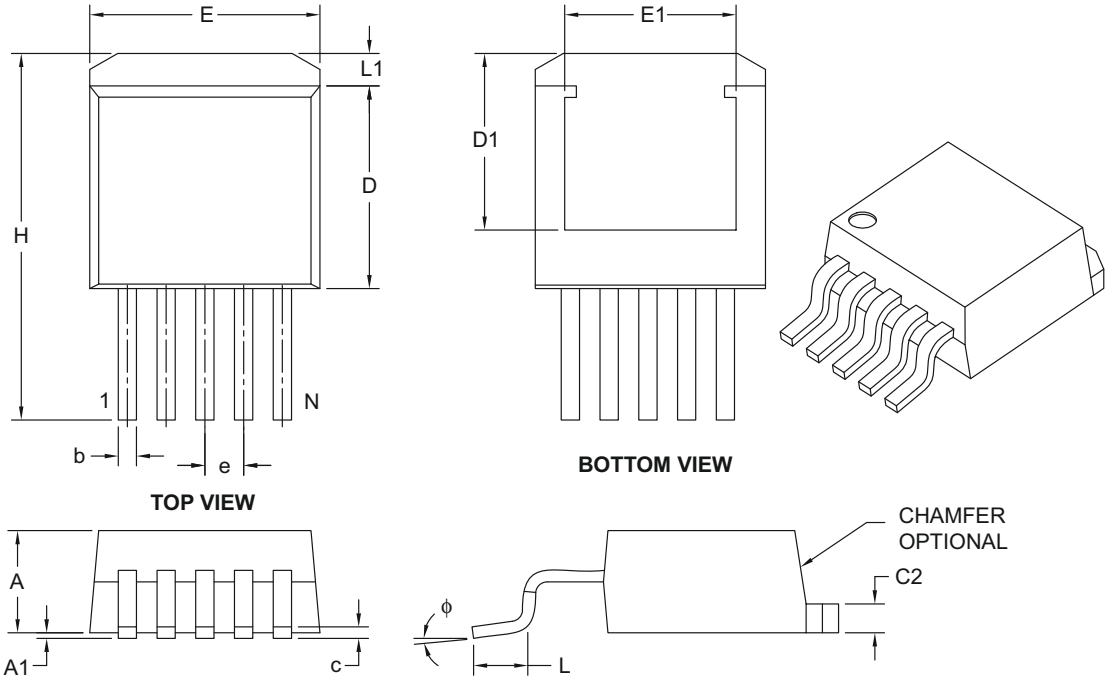


| Units | | INCHES | | |
|---|---|---|---|---|
| Dimension Limits | | MIN | NOM | MAX |
| Number of Pins | N | | 5 | |
| Pitch | e | | .067 BSC | |
| Overall Height | A | .160 | – | .190 |
| Standoff § | A1 | .000 | – | .010 |
| Overall Width | E | .380 | – | .420 |
| Exposed Pad Width | E1 | .245 | – | – |
| Molded Package Length | D | .330 | – | .380 |
| Overall Length | H | .549 | – | .625 |
| Exposed Pad Length | D1 | .270 | – | – |
| Lead Thickness | c | .014 | – | .029 |
| Pad Thickness | C2 | .045 | – | .065 |
| Lead Width | b | .020 | – | .039 |
| Foot Length | L | .068 | – | .110 |
| Pad Length | L1 | – | – | .067 |
| Foot Angle | ϕ | 0° | – | 8° |

**Notes:**

1. § Significant Characteristic.
2. Dimensions D and E do not include mold flash or protrusions. Mold flash or protrusions shall not exceed .005" per side.
3. Dimensioning and tolerancing per ASME Y14.5M.

BSC: Basic Dimension. Theoretically exact value shown without tolerances.

Microchip Technology Drawing C04-012B


© 2006-2013 Microchip Technology Inc.

5-Lead Plastic (ET) [DDPAK]

**Note:** For the most current package drawings, please see the Microchip Packaging Specification located at http://www.microchip.com/packaging

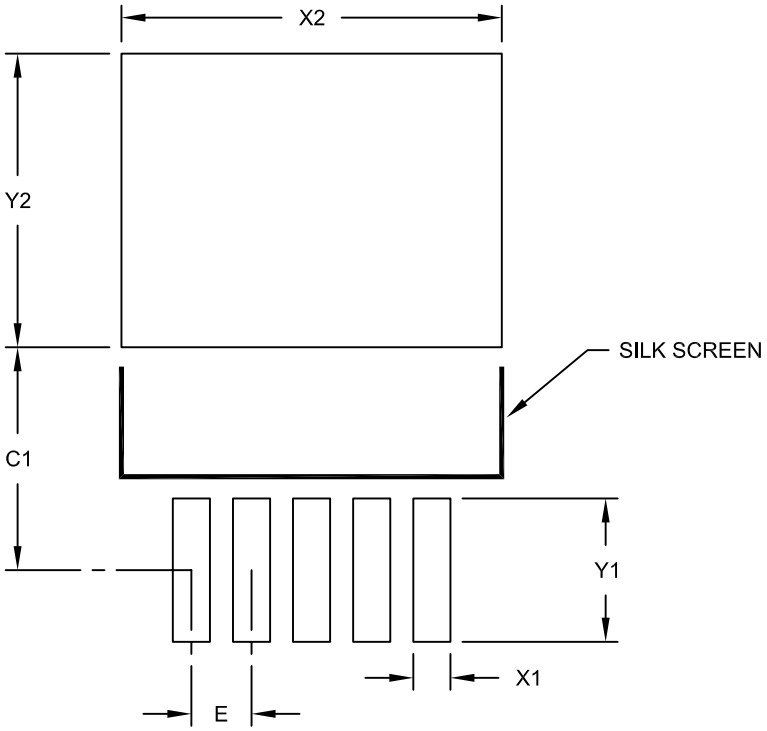


RECOMMENDED LAND PATTERN

| Units | | INCHES | | |
|---|---|---|---|---|
| Dimension Limits | | MIN | NOM | MAX |
| Contact Pitch | E | | .067 BSC | |
| Optional Center Pad Width | X2 | | | .423 |
| Optional Center Pad Length | Y2 | | | .327 |
| Contact Pad Spacing | C1 | | .248 | |
| Contact Pad Width (X5) | X1 | | | .041 |
| Contact Pad Length (X5) | Y1 | | | .159 |

Notes:

1. Dimensioning and tolerancing per ASME Y14.5M

BSC: Basic Dimension. Theoretically exact value shown without tolerances.

Microchip Technology Drawing No. C04-2012A

## 5-Lead Plastic Transistor Outline (AT) [TO-220]

**Note:** For the most current package drawings, please see the Microchip Packaging Specification located at http://www.microchip.com/packaging

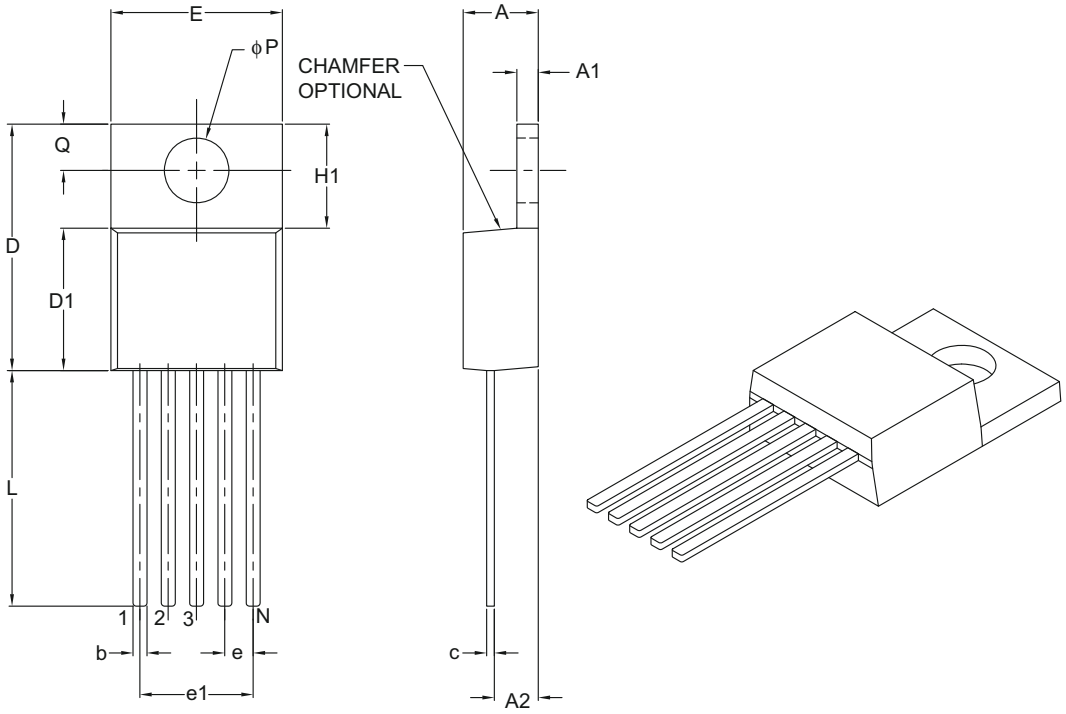


| Units | | INCHES | | |
|---|---|---|---|---|
| Dimension Limits | | MIN | NOM | MAX |
| Number of Pins | N | | 5 | |
| Pitch | e | | .067 BSC | |
| Overall Pin Pitch | e1 | | .268 BSC | |
| Overall Height | A | .140 | – | .190 |
| Overall Width | E | .380 | – | .420 |
| Overall Length | D | .560 | – | .650 |
| Molded Package Length | D1 | .330 | – | .355 |
| Tab Length | H1 | .204 | – | .293 |
| Tab Thickness | A1 | .020 | – | .055 |
| Mounting Hole Center | Q | .100 | – | .120 |
| Mounting Hole Diameter | ϕP | .139 | – | .156 |
| Lead Length | L | .482 | – | .590 |
| Base to Bottom of Lead | A2 | .080 | – | .115 |
| Lead Thickness | c | .012 | – | .025 |
| Lead Width | b | .015 | .027 | .040 |

**Notes:**

1. Dimensions D and E do not include mold flash or protrusions. Mold flash or protrusions shall not exceed .005" per side.
2. Dimensioning and tolerancing per ASME Y14.5M.

BSC: Basic Dimension. Theoretically exact value shown without tolerances.

Microchip Technology Drawing C04-036B


© 2006-2013 Microchip Technology Inc.

# APPENDIX A: REVISION HISTORY

## Revision D (March 2013)

The following is the list of modifications:

- Updated the value of $V_{DROPOUT\ (max)}$ in **Section 5.1 "Typical Application"**.
- Updated the 5-lead DDPAK (MCP1827) information in the Product Identification Systemsection.

## Revision C (February 2007)

- Figure 2-22: Revised label on Y-axis.
- **Section 2.0 "Typical Performance Curves"**: Added note on Junction Temperature.
- Pages 9-14: Revised notes.

## Revision B (September 2006)

- Correction to maximum Dropout Voltage in Section 1.0.
- Added additional graphs in Section 2.0.
- Added disclaimer to package outline drawings.

## Revision A (July 2006)

- Original Release of this Document.

**NOTES:**


© 2006-2013 Microchip Technology Inc.

## PRODUCT IDENTIFICATION SYSTEM

To order or obtain information, e.g., on pricing or delivery, refer to the factory or the listed sales office.

| PART NO. | XX | X | X | X/ | XX |
|---|---|---|---|---|---|
| Device | Output Voltage | Feature Code | Tolerance | Temp. | Package |

| | |
|---|---|
| **Device:** | MCP1827: 1.5A Low Dropout Regulator<br>MCP1827T: 1.5A Low Dropout Regulator Tape and Reel<br>MCP1827S: 1.5A Low Dropout Regulator<br>MCP1827ST: 1.5A Low Dropout Regulator Tape and Reel |
| **Output Voltage *:** | 08 = 0.8V “Standard”<br>12 = 1.2V “Standard”<br>18 = 1.8V “Standard”<br>25 = 2.5V “Standard”<br>30 = 3.0V “Standard”<br>33 = 3.3V “Standard”<br>50 = 5.0V “Standard”<br>*Contact factory for other output voltage options |
| **Extra Feature Code:** | 0 = Fixed |
| **Tolerance:** | 2 = 2.0% (Standard) |
| **Temperature:** | E = -40°C to +125°C |
| **Package Type:** | AB = Plastic Transistor Outline, TO-220, 3-lead<br>AT = Plastic Transistor Outline, TO-220, 5-lead<br>EB = Plastic, DDPAK, 3-lead<br>ET = Plastic, DDPAK, 5-lead |

**Examples:**

a) MCP1827-0802E/AT: 0.8V LDO Regulator 5LD TO-220

b) MCP1827-1002E/ET: 1.0V LDO Regulator 5LD DDPAK

c) MCP1827-1202E/AT: 1.2V LDO Regulator 5LD TO-220

d) MCP1827-1802E/AT: 1.8V LDO Regulator 5LD TO-220

e) MCP1827-2502E/ET: 2.5V LDO Regulator 5LD DDPAK

f) MCP1827-3002E/ET: 3.0V LDO Regulator 5LD DDPAK

g) MCP1827-3302E/AT 3.3V LDO Regulator 5LD TO-220

h) MCP1827-5002E/ET: 5.0V LDO Regulator 5LD DDPAK

i) MCP1827-ADJE/AT: ADJ LDO Regulator 5LD TO-220

j) MCP1827-ADJE/ET ADJ LDO Regulator 5LD DDPAK

a) MCP1827S-0802E/EB: 0.8V LDO Regulator 3LD DDPAK

b) MCP1827S-0802E/AB: 0.8V LDO Regulator 3LD TO-220

c) MCP1827S-1002E/EB: 1.0V LDO Regulator 3LD DDPAK

d) MCP1827S-1202E/AB 1.2V LDO Regulator 3LD TO-220

e) MCP1827S-1802E/EB 1.8V LDO Regulator 3LD DDPAK

f) MCP1827S-2502E/EB 2.5V LDO Regulator 3LD DDPAK

g) MCP1827S-2502E/EB 3.0V LDO Regulator 3LD DDPAK

h) MCP1827S-3302E/AB 3.3V LDO Regulator 3LD TO-220

i) MCP1827S-5002E/EB 5.0V LDO Regulator 3LD DDPAK

**NOTES:**


© 2006-2013 Microchip Technology Inc.

**Note the following details of the code protection feature on Microchip devices:**

- Microchip products meet the specification contained in their particular Microchip Data Sheet.
- Microchip believes that its family of products is one of the most secure families of its kind on the market today, when used in the intended manner and under normal conditions.
- There are dishonest and possibly illegal methods used to breach the code protection feature. All of these methods, to our knowledge, require using the Microchip products in a manner outside the operating specifications contained in Microchip's Data Sheets. Most likely, the person doing so is engaged in theft of intellectual property.
- Microchip is willing to work with the customer who is concerned about the integrity of their code.
- Neither Microchip nor any other semiconductor manufacturer can guarantee the security of their code. Code protection does not mean that we are guaranteeing the product as "unbreakable."

Code protection is constantly evolving. We at Microchip are committed to continuously improving the code protection features of our products. Attempts to break Microchip's code protection feature may be a violation of the Digital Millennium Copyright Act. If such acts allow unauthorized access to your software or other copyrighted work, you may have a right to sue for relief under that Act.

Information contained in this publication regarding device applications and the like is provided only for your convenience and may be superseded by updates. It is your responsibility to ensure that your application meets with your specifications. MICROCHIP MAKES NO REPRESENTATIONS OR WARRANTIES OF ANY KIND WHETHER EXPRESS OR IMPLIED, WRITTEN OR ORAL, STATUTORY OR OTHERWISE, RELATED TO THE INFORMATION, INCLUDING BUT NOT LIMITED TO ITS CONDITION, QUALITY, PERFORMANCE, MERCHANTABILITY OR FITNESS FOR PURPOSE**.** Microchip disclaims all liability arising from this information and its use. Use of Microchip devices in life support and/or safety applications is entirely at the buyer's risk, and the buyer agrees to defend, indemnify and hold harmless Microchip from any and all damages, claims, suits, or expenses resulting from such use. No licenses are conveyed, implicitly or otherwise, under any Microchip intellectual property rights.

**Trademarks**

The Microchip name and logo, the Microchip logo, dsPIC, FlashFlex, KEELOQ, KEELOQ logo, MPLAB, PIC, PICmicro, PICSTART, PIC$^{32}$ logo, rfPIC, SST, SST Logo, SuperFlash and UNI/O are registered trademarks of Microchip Technology Incorporated in the U.S.A. and other countries.

FilterLab, Hampshire, HI-TECH C, Linear Active Thermistor, MTP, SEEVAL and The Embedded Control Solutions Company are registered trademarks of Microchip Technology Incorporated in the U.S.A.

Silicon Storage Technology is a registered trademark of Microchip Technology Inc. in other countries.

Analog-for-the-Digital Age, Application Maestro, BodyCom, chipKIT, chipKIT logo, CodeGuard, dsPICDEM, dsPICDEM.net, dsPICworks, dsSPEAK, ECAN, ECONOMONITOR, FanSense, HI-TIDE, In-Circuit Serial Programming, ICSP, Mindi, MiWi, MPASM, MPF, MPLAB Certified logo, MPLIB, MPLINK, mTouch, Omniscient Code Generation, PICC, PICC-18, PICDEM, PICDEM.net, PICkit, PICtail, REAL ICE, rfLAB, Select Mode, SQI, Serial Quad I/O, Total Endurance, TSHARC, UniWinDriver, WiperLock, ZENA and Z-Scale are trademarks of Microchip Technology Incorporated in the U.S.A. and other countries.

SQTP is a service mark of Microchip Technology Incorporated in the U.S.A.

GestIC and ULPP are registered trademarks of Microchip Technology Germany II GmbH & Co. KG, a subsidiary of Microchip Technology Inc., in other countries.

All other trademarks mentioned herein are property of their respective companies.

© 2006-2013, Microchip Technology Incorporated, Printed in the U.S.A., All Rights Reserved.

Printed on recycled paper.

ISBN: 9781620770412

**QUALITY MANAGEMENT SYSTEM**
**CERTIFIED BY DNV**
**ISO/TS 16949**

*Microchip received ISO/TS-16949:2009 certification for its worldwide headquarters, design and wafer fabrication facilities in Chandler and Tempe, Arizona; Gresham, Oregon and design centers in California and India. The Company's quality system processes and procedures are for its PIC® MCUs and dsPIC® DSCs, KEELOQ® code hopping devices, Serial EEPROMs, microperipherals, nonvolatile memory and analog products. In addition, Microchip's quality system for the design and manufacture of development systems is ISO 9001:2000 certified.*

# Worldwide Sales and Service


## AMERICAS

**Corporate Office**
2355 West Chandler Blvd.
Chandler, AZ 85224-6199
Tel: 480-792-7200
Fax: 480-792-7277
Technical Support:
http://www.microchip.com/support
Web Address:
www.microchip.com

**Atlanta**
Duluth, GA
Tel: 678-957-9614
Fax: 678-957-1455

**Boston**
Westborough, MA
Tel: 774-760-0087
Fax: 774-760-0088

**Chicago**
Itasca, IL
Tel: 630-285-0071
Fax: 630-285-0075

**Cleveland**
Independence, OH
Tel: 216-447-0464
Fax: 216-447-0643

**Dallas**
Addison, TX
Tel: 972-818-7423
Fax: 972-818-2924

**Detroit**
Farmington Hills, MI
Tel: 248-538-2250
Fax: 248-538-2260

**Indianapolis**
Noblesville, IN
Tel: 317-773-8323
Fax: 317-773-5453

**Los Angeles**
Mission Viejo, CA
Tel: 949-462-9523
Fax: 949-462-9608

**Santa Clara**
Santa Clara, CA
Tel: 408-961-6444
Fax: 408-961-6445

**Toronto**
Mississauga, Ontario,
Canada
Tel: 905-673-0699
Fax: 905-673-6509

## ASIA/PACIFIC

**Asia Pacific Office**
Suites 3707-14, 37th Floor
Tower 6, The Gateway
Harbour City, Kowloon
Hong Kong
Tel: 852-2401-1200
Fax: 852-2401-3431

**Australia - Sydney**
Tel: 61-2-9868-6733
Fax: 61-2-9868-6755

**China - Beijing**
Tel: 86-10-8569-7000
Fax: 86-10-8528-2104

**China - Chengdu**
Tel: 86-28-8665-5511
Fax: 86-28-8665-7889

**China - Chongqing**
Tel: 86-23-8980-9588
Fax: 86-23-8980-9500

**China - Hangzhou**
Tel: 86-571-2819-3187
Fax: 86-571-2819-3189

**China - Hong Kong SAR**
Tel: 852-2943-5100
Fax: 852-2401-3431

**China - Nanjing**
Tel: 86-25-8473-2460
Fax: 86-25-8473-2470

**China - Qingdao**
Tel: 86-532-8502-7355
Fax: 86-532-8502-7205

**China - Shanghai**
Tel: 86-21-5407-5533
Fax: 86-21-5407-5066

**China - Shenyang**
Tel: 86-24-2334-2829
Fax: 86-24-2334-2393

**China - Shenzhen**
Tel: 86-755-8864-2200
Fax: 86-755-8203-1760

**China - Wuhan**
Tel: 86-27-5980-5300
Fax: 86-27-5980-5118

**China - Xian**
Tel: 86-29-8833-7252
Fax: 86-29-8833-7256

**China - Xiamen**
Tel: 86-592-2388138
Fax: 86-592-2388130

**China - Zhuhai**
Tel: 86-756-3210040
Fax: 86-756-3210049

## ASIA/PACIFIC

**India - Bangalore**
Tel: 91-80-3090-4444
Fax: 91-80-3090-4123

**India - New Delhi**
Tel: 91-11-4160-8631
Fax: 91-11-4160-8632

**India - Pune**
Tel: 91-20-2566-1512
Fax: 91-20-2566-1513

**Japan - Osaka**
Tel: 81-6-6152-7160
Fax: 81-6-6152-9310

**Japan - Tokyo**
Tel: 81-3-6880- 3770
Fax: 81-3-6880-3771

**Korea - Daegu**
Tel: 82-53-744-4301
Fax: 82-53-744-4302

**Korea - Seoul**
Tel: 82-2-554-7200
Fax: 82-2-558-5932 or
82-2-558-5934

**Malaysia - Kuala Lumpur**
Tel: 60-3-6201-9857
Fax: 60-3-6201-9859

**Malaysia - Penang**
Tel: 60-4-227-8870
Fax: 60-4-227-4068

**Philippines - Manila**
Tel: 63-2-634-9065
Fax: 63-2-634-9069

**Singapore**
Tel: 65-6334-8870
Fax: 65-6334-8850

**Taiwan - Hsin Chu**
Tel: 886-3-5778-366
Fax: 886-3-5770-955

**Taiwan - Kaohsiung**
Tel: 886-7-213-7828
Fax: 886-7-330-9305

**Taiwan - Taipei**
Tel: 886-2-2508-8600
Fax: 886-2-2508-0102

**Thailand - Bangkok**
Tel: 66-2-694-1351
Fax: 66-2-694-1350

## EUROPE

**Austria - Wels**
Tel: 43-7242-2244-39
Fax: 43-7242-2244-393

**Denmark - Copenhagen**
Tel: 45-4450-2828
Fax: 45-4485-2829

**France - Paris**
Tel: 33-1-69-53-63-20
Fax: 33-1-69-30-90-79

**Germany - Munich**
Tel: 49-89-627-144-0
Fax: 49-89-627-144-44

**Italy - Milan**
Tel: 39-0331-742611
Fax: 39-0331-466781

**Netherlands - Drunen**
Tel: 31-416-690399
Fax: 31-416-690340

**Spain - Madrid**
Tel: 34-91-708-08-90
Fax: 34-91-708-08-91

**UK - Wokingham**
Tel: 44-118-921-5869
Fax: 44-118-921-5820


11/29/12



© 2006-2013 Microchip Technology Inc.