USB224x

Ultra Fast USB 2.0 Multi-Format, SD/MMC, and MS Flash Media Controllers

PRODUCT FEATURES

Data Brief

General Description

The SMSC USB224x is a USB 2.0 compliant, Hi-Speed bulk only[1] mass storage class peripheral controller intended for reading and writing to popular flash media from the xD-Picture Card™ (xD)[2], Memory Stick® (MS), Secure Digital (SD), and MultiMediaCard™ (MMC) families.

The SMSC USB224x is a fully integrated, single chip solution capable of ultra high performance operation. Average sustained transfer rates exceeding 35 MB/s are possible if the media and host can support those rates. The USB2244/44i includes provisions to read/write secure media formats.

General Features

- Low pin count 36-pin QFN (6x6 mm) lead-free RoHS compliant package
- USB2240/40i/41/41i
  - Targeted for applications in which single or "combo" media sockets are used
- Hardware-controlled data flow architecture for all self-mapped media
- Pipelined hardware support for access to non-self-mapped media
- Order number with “i” denote the products that support the industrial temperature range of -40ºC to 85ºC
- Support included for secure media format on a licensed, customized basis
  - USB2244/44i: SD Secure
  - USB2242/42i: Sony MagicGate™

Hardware Features

- Single chip flash media controller with
  - USB2240/40i/41/4i: multiplexed interface for use with “combo” card sockets
  - USB2242/42i: MS flash media reader/writer
  - USB2244/44i: SD/MMC flash media reader/writer
- SDIO and MMC Streaming Mode support
- Extended configuration options
  - xD player mode operation
  - Socket switch polarities, etc.
- Media Activity LED
- GPIO configuration and polarity
  - Up to 8 GPIOs for special function use
  - One GPIO with up to 200 mA drive
- On board 24 MHz crystal driver circuit
- Optional external 24 MHz clock input[3]
- Internal card power FET
  - 200 mA
  - "Fold-back" short circuit protection
- 8051 8-bit microprocessor
  - 60 MHz - single cycle execution
  - 64 KB ROM | 14 KB RAM
- Supports a single external 3.3 V supply source; internal regulators provide 1.8 V internal core voltage for additional bill of materials and power savings
- Optimized pinout improves signal routing which eases implementation for improved signal integrity

Flash Media Specification Compliance

- Secure Digital 2.0
  - HS-SD, SDHC
  - TransFlash™ and reduced form factor media
- MultiMediaCard 4.2
  - 1/4/8-bit MMC
- Memory Stick Formats
  - MS 1.43, Pro 1.02, Duo 1.10
  - Pro-HG Duo 1.01
    - MS, MS Duo, HS-MS, MS Pro-HG, MS Pro
- xD-Picture Card 1.2

Software Features

- Customizable vendor specific data
- Optimized for low latency interrupt handling
- Reduced memory footprint

Applications

- Flash media card reader/writers
- Desktop and mobile PCs
- Printers
- Consumer A/V and media players/viewers
- Compatible with
  - Microsoft® Vista™ and Vista ReadyBoost™
  - Windows® XP, ME, 2K SP4
  - Apple Mac OSx®
  - Linux Mass Storage Class Drivers

1.Bulk only is not applicable to USB2240/40i/41/41i.
2.xD-Picture Card is not applicable to USB2241/41i.

3.Only applicable to USB2240/40i/41/41i.

PRODUCT PREVIEW

Order Numbers:

ORDER NUMBERS	LEAD-FREE ROHS COMPLIANT PACKAGE TYPE / SIZE	SD/MMC	xD	MS/ MS PRO/ MS PRO-HG	OPERATING TEMPERATURE
USB2240-AEZG-XX	36 QFN 6 x 6 x 0.5 mm	✓	✓	✓	0ºC to 70ºC
USB2240i-AEZG-XX		✓	✓	✓	-40ºC to 85ºC
USB2241-AEZG-XX		✓		✓	0ºC to 70ºC
USB2241i-AEZG-XX		✓		✓	-40ºC to 85ºC
USB2242-AEZG-XX				✓	0ºC to 70ºC
USB2242i-AEZG-XX				✓	-40ºC to 85ºC
USB2244-AEZG-XX		✓			0ºC to 70ºC
USB2244i-AEZG-XX		✓			-40ºC to 85ºC

"XX" in the order number indicates the internal ROM firmware revision level.
Please contact your SMSC sales representative for more information.

This product meets the halogen maximum concentration values per IEC61249-2-21

For RoHS compliance and environmental information, please visit www.smsc.com/rohs

Copyright © 2013 SMSC or its subsidiaries. All rights reserved.

Circuit diagrams and other information relating to SMSC products are included as a means of illustrating typical applications. Consequently, complete information sufficient for construction purposes is not necessarily given. Although the information has been checked and is believed to be accurate, no responsibility is assumed for inaccuracies. SMSC reserves the right to make changes to specifications and product descriptions at any time without notice. Contact your local SMSC sales office to obtain the latest specifications before placing your product order. The provision of this information does not convey to the purchaser of the described semiconductor devices any licenses under any patent rights or other intellectual property rights of SMSC or others. All sales are expressly conditional on your agreement to the terms and conditions of the most recently dated version of SMSC's standard Terms of Sale Agreement dated before the date of your order (the "Terms of Sale Agreement"). The product may contain design defects or errors known as anomalies which may cause the product's functions to deviate from published specifications. Anomaly sheets are available upon request. SMSC products are not designed, intended, authorized or warranted for use in any life support or other application where product failure could cause or contribute to personal injury or severe property damage. Any and all such uses without prior written approval of an Officer of SMSC and further testing and/or modification will be fully at the risk of the customer. Copies of this document or other SMSC literature, as well as the Terms of Sale Agreement, may be obtained by visiting SMSC's website at http://www.smsc.com. SMSC is a registered trademark of Standard Microsystems Corporation ("SMSC"). Product names and company names are the trademarks of their respective holders.

The Microchip name and logo, and the Microchip logo are registered trademarks of Microchip Technology Incorporated in the U.S.A. and other countries.

SMSC DISCLAIMS AND EXCLUDES ANY AND ALL WARRANTIES, INCLUDING WITHOUT LIMITATION ANY AND ALL IMPLIED WARRANTIES OF MERCHANTABILITY, FITNESS FOR A PARTICULAR PURPOSE, TITLE, AND AGAINST INFRINGEMENT AND THE LIKE, AND ANY AND ALL WARRANTIES ARISING FROM ANY COURSE OF DEALING OR USAGE OF TRADE. IN NO EVENT SHALL SMSC BE LIABLE FOR ANY DIRECT, INCIDENTAL, INDIRECT, SPECIAL, PUNITIVE, OR CONSEQUENTIAL DAMAGES; OR FOR LOST DATA, PROFITS, SAVINGS OR REVENUES OF ANY KIND; REGARDLESS OF THE FORM OF ACTION, WHETHER BASED ON CONTRACT; TORT; NEGLIGENCE OF SMSC OR OTHERS; STRICT LIABILITY; BREACH OF WARRANTY; OR OTHERWISE; WHETHER OR NOT ANY REMEDY OF BUYER IS HELD TO HAVE FAILED OF ITS ESSENTIAL PURPOSE, AND WHETHER OR NOT SMSC HAS BEEN ADVISED OF THE POSSIBILITY OF SUCH DAMAGES.

Overview

The SMSC USB224x is a flash media card reader solution fully compliant with the USB 2.0 specification. All required resistors on the USB ports are integrated into the device. This includes all series termination resistors on D+ and D– pins and all required pull-down and pull-up resistors. The over-current sense inputs for the downstream facing ports have internal pull-up resistors.

Hardware Features

- Single chip flash media controller in low pin count 36-pin QFN, lead-free RoHS compliant package
- Commercial temperature products support 0°C to +70°C: USB2240/41, USB2242 and USB2244
- Industrial temperature products support -40°C to +85°C: USB2240i/41i, USB2242i and USB2244i
- Up to 8 GPIOs
  - — Configuration and polarity for special function use such as LED indicators, button inputs, and power control to memory devices
  - — The number of actual GPIOs depends on the implementation configuration used
- One GPIO available with up to 200 mA drive and “fold-back” short circuit protection
- 8051 8-bit microprocessor
  - — 60 MHz - single cycle execution
  - — 64 KB ROM |14 KB RAM
- Supports a single external 3.3 V supply source; internal regulators provide 1.8 V internal core voltage for additional bill of materials and power savings

Compliance with the following flash media card specifications:

- Secure Digital 2.0
  - — HS-SD and SDHC
  - — TransFlash™ and reduced form factor media
- MultiMediaCard 4.2
  - — 1/4/8 bit MMC
- Memory Stick 1.43
- Memory Stick Pro Format 1.02
- Memory Stick Pro-HG Duo Format 1.01
  - — Memory Stick, MS Duo, HS-MS, MS Pro-HG, MS Pro
- Memory Stick Duo 1.10
- xD-Picture Card 1.2

Software Features

- If the OEM is using an external EEPROM, the following features are available:
  - — Customizable vendor, product, language, and device ID’s
  - — 12-hex digits maximum for the serial number string
  - — 28-character manufacturer ID and product strings for the flash media reader/writer
  - — LED blink interval or duration

Block Diagrams

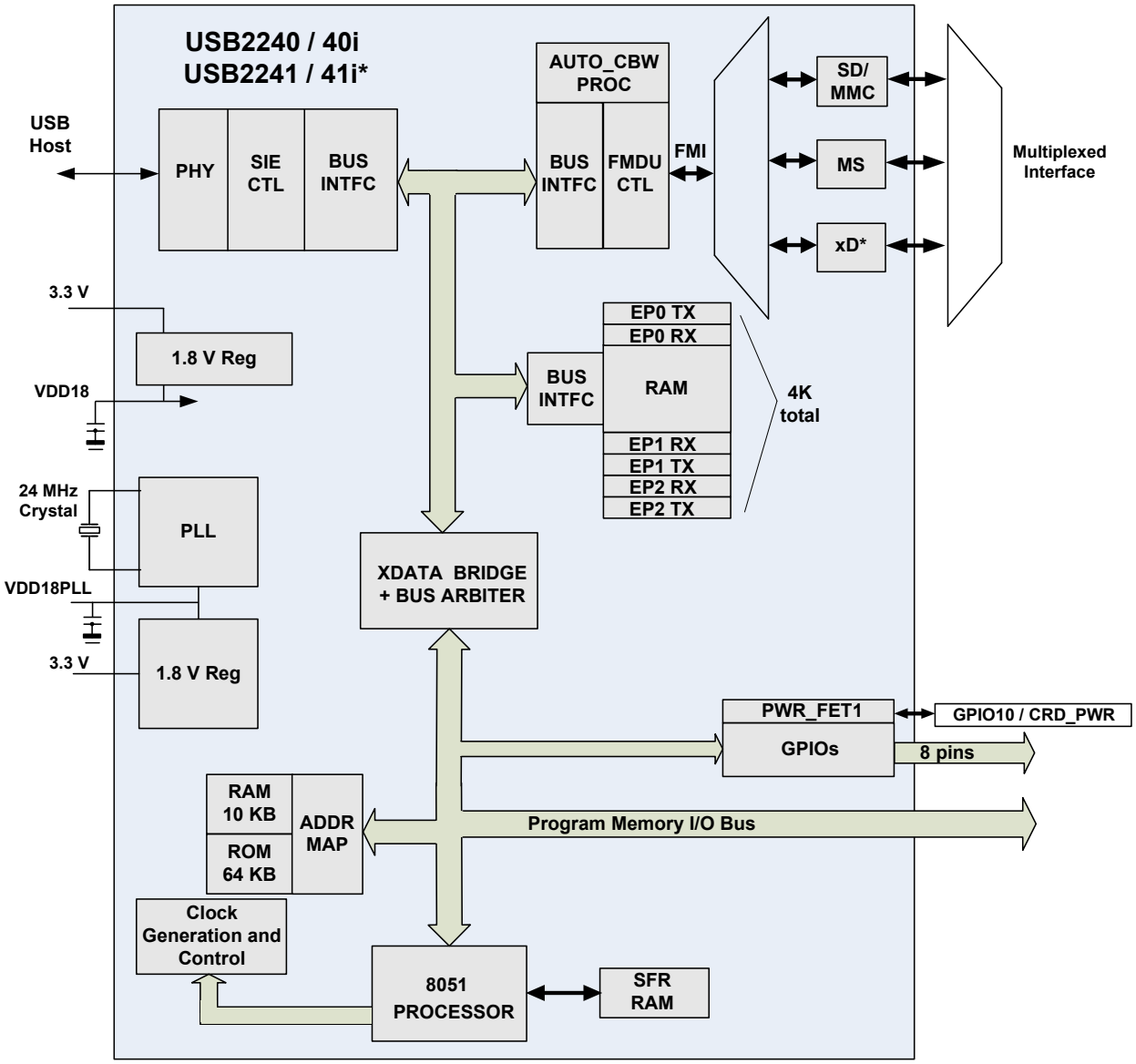

NOTE: xD-Picture Card is not applicable to USB2241/41i.

Figure 1 USB2240/40i/41/41i Block Diagram

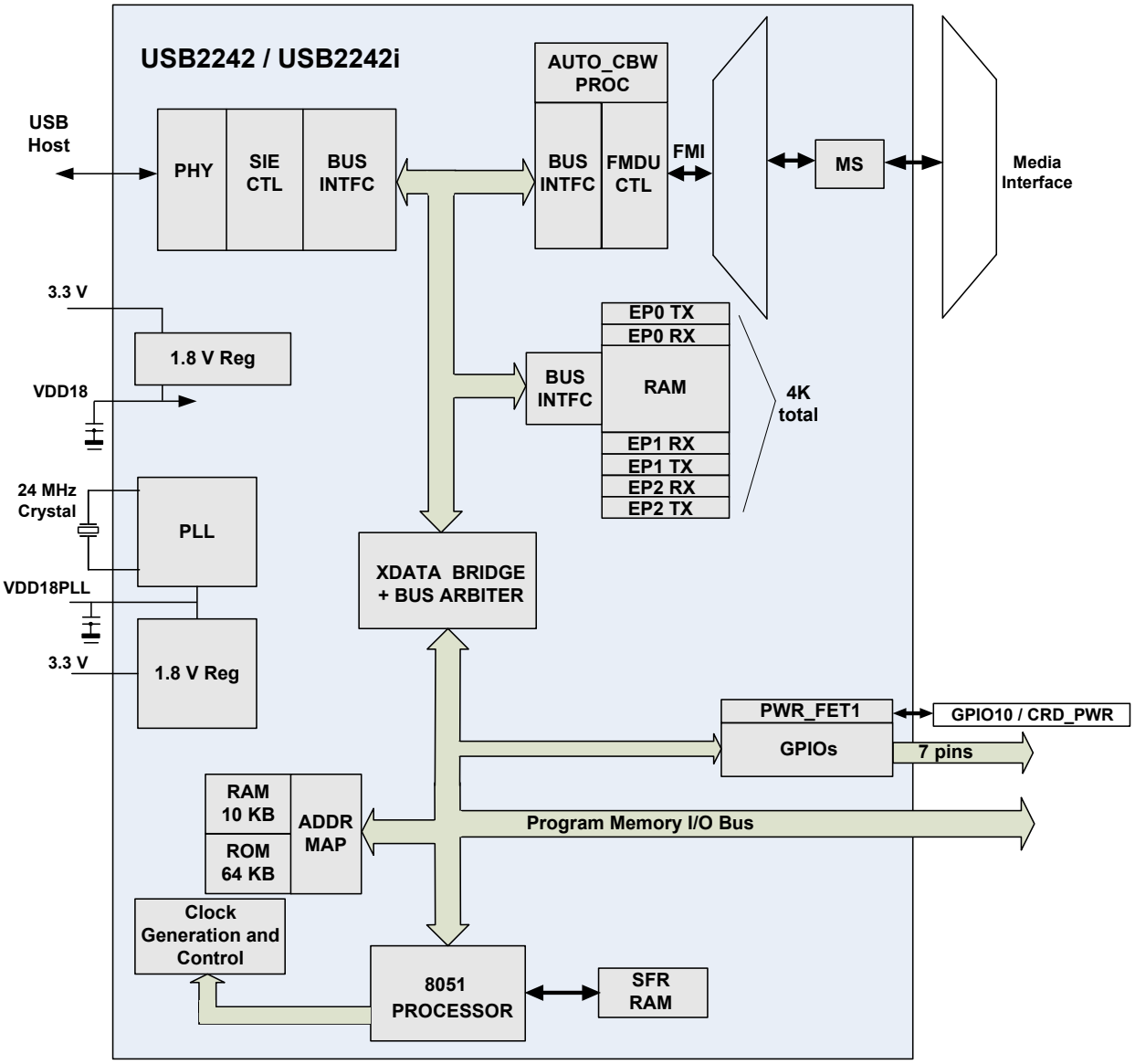

Figure 2 USB2242/42i Block Diagram

PRODUCT PREVIEW

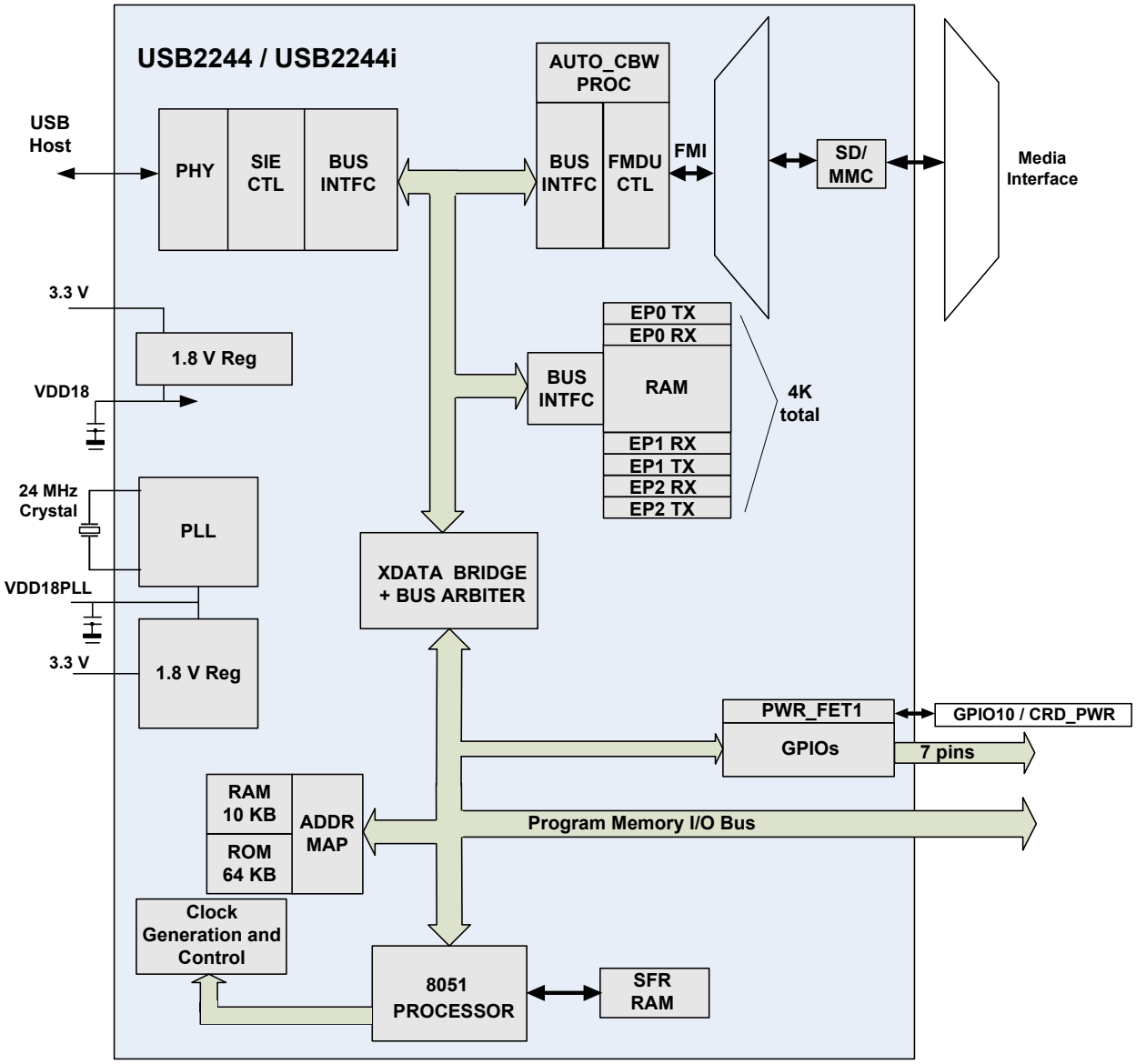

Figure 3 USB2244/44i Block Diagram

PRODUCT PREVIEW

Package Outline

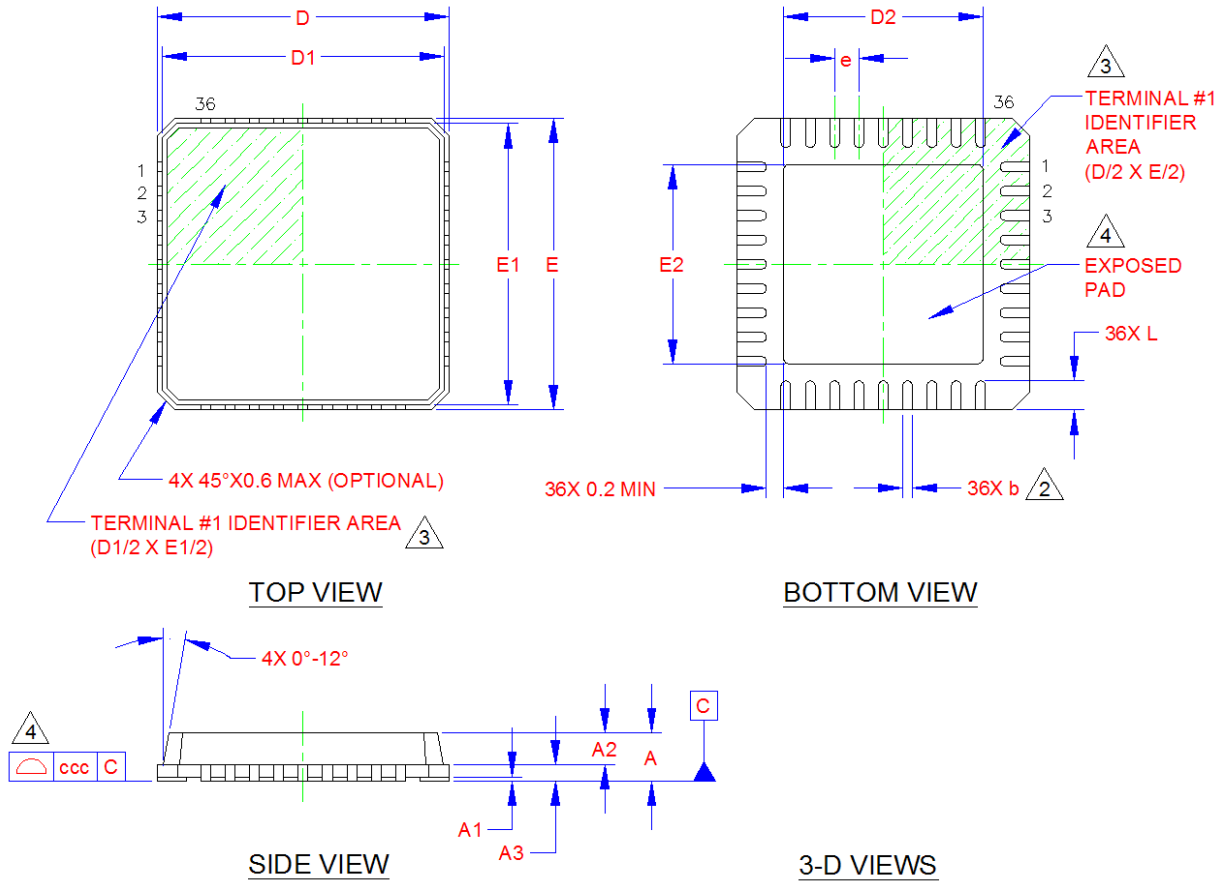

Figure 4 USB224x 36-QFN, 6x6 mm Body, 0.5 mm Pitch

Table 1 Package Parameters

SYMBOL	MIN	NOMINAL	MAX	NOTE	REMARKS
A	0.80	~	1.00	-	Overall Package Height
A1	0	0.02	0.05	-	Standoff
A2	0.60	~	0.80	-	Mold Thickness
A3		0.20 REF		-	Leadframe Thickness
D/E	5.85	6.00	6.15	-	X/Y Overall Body Size
D1/E1	5.55	~	5.95	-	X/Y Mold Cap Size
D2/E2	4.00	4.10	4.20	2	X/Y Exposed Pad Size
L	0.50	0.60	0.75	-	Terminal Length
b	0.18	0.25	0.30	2	Terminal Width
e		0.50 BSC		-	Terminal Pitch

Note 1 All dimensions are in millimeters.

Note 2 Position tolerance of each terminal and exposed pad is ±0.05 mm at maximum material condition.

Note 3 Dimension “b” applies to plated terminals and is measured between 0.15 mm and 0.30 mm from the terminal tip.

Note 4 Details of terminal #1 identifier are optional but must be located within the area indicated.

Note 5 Coplanarity zone applies to exposed pad and terminals.

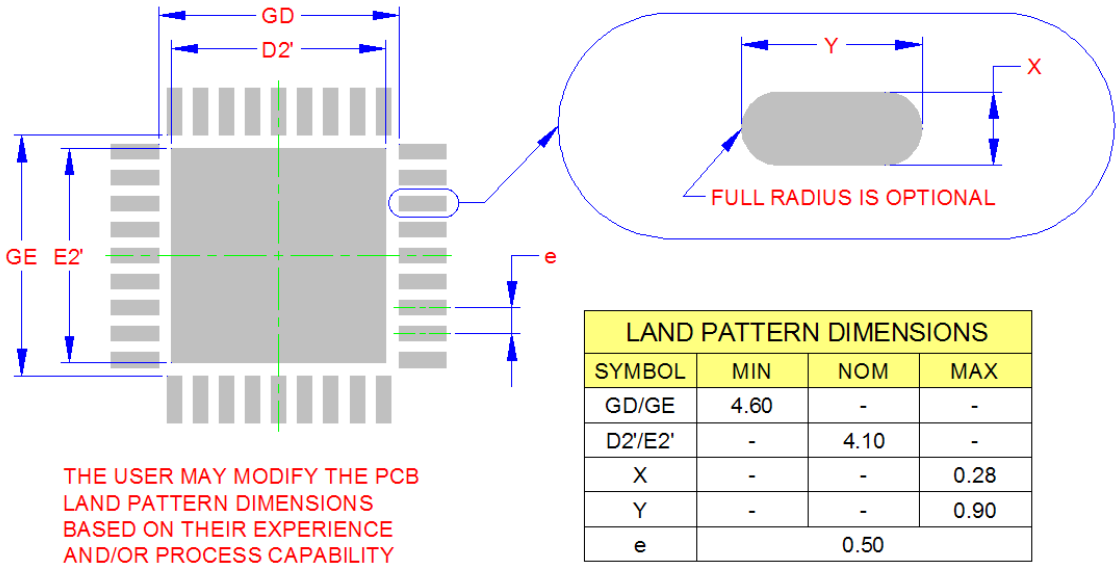

LAND PATTERN DIMENSIONS			
SYMBOL	MIN	NOM	MAX
GD/GE	4.60	-	-
D2'/E2'	-	4.10	-
X	-	-	0.28
Y	-	-	0.90
e		0.50	

RECOMMENDED PCB LAND PATTERN

Figure 5 Additional Package Information and Notes

PRODUCT PREVIEW