

BOURNS®

Features

- Multi-stage protection
- Balanced TRIGARD®
- Quick response to surges
- High energy handling
- Reliability is improved by elimination of the air Back-Up-Gap (BUG)

This series is obsolete and not recommended for new designs.

2377-45 Series Digi-Guard™ – MSP® Maximum Duty Station Protector

Bourns® Model 455HS Multi-Stage Protector (MSP®) is a new generation telecommunications station protector designed to be the best all around choice for protecting copper pair voice-band and high-speed data circuits. Combining the strengths of Gas Discharge Tube (GDT) and solid state overvoltage protection, the Model 455HS MSP® integrates three advanced technologies: our proprietary advanced GDT, precision matched metal oxide varistors (MOV), and a patented Switch-Grade Fail-Short mechanism. The 2377 series offer superior service life, far exceeding Telcordia standards.

Bourns® 2377-45 can be used universally for POTS and high speed data, e.g. ISDN, ADSL, ADSL2+, VDSL, VDSL2, other xDSL protocols and high speed Ethernet. Bourns® MSP® technology provides unparalleled overvoltage protection with low loss on paired copper communications circuits. The Model 455 is the most economical, reliable and effective choice to protect paired copper communications circuits. The IDC version, with environmental sealant, provides additional ease of installation and protection against corrosion.

Characteristics

Tested per IEEE C62.31, UL 497, CSA C22.2, Telcordia GR-1361 and applicable sections of Telcordia GR 974.

DC Breakdown		300-400 V
AC Breakdown	60 Hz	300-400 V
Impulse Breakdown	100 V/µs	600 V
	1000 V/µs	650 V
Insulation Resistance	100 Vdc	> 1 GΩ
Insertion Loss	100 MHz	< 0.4 dB (Category 5)
Return Loss	100 MHz	> 14 dB (Category 5)
Capacitance Line to Line - Binding Post	1 MHz	12 pF typical
Capacitance Line to Line - IDC	1 MHz	14 pF typical
Capacitance Line to Ground - Binding Post	1 MHz	24 pF typical
Capacitance Line to Ground - IDC	1 MHz	28 pF typical
Impulse Reset [1]	52 V, 260 mA	< 10 ms [3]
	135 V, 200 mA	< 10 ms [3]
	150 V, 200 mA	< 150 ms
Impulse Life Characteristics [2] (Per-Side, Simultaneously)	100 A, 10/1000 µs	> 3000 operations
	300 A, 10/1000 µs	> 1000 operations
	500 A, 10/1000 µs	> 1000 operations [4]
	2,000 A, 10/250 µs	> 100 operations
	5,000 A, 20/100 µs	> 10 operations
	20,000 A, 8/20 µs	> 10 operations [4]
AC Life Characteristics	0.5 A rms continuous	> 30 seconds
	1 A rms, 1 second, 600 ft. cable	> 60 operations
	1 A rms, 1 second, 1 mile cable	> 60 operations
	10 A rms, 1 second	> 20 operations
	200 A rms, 11 cycles	1 operation [5]
	120 A rms, 0.1 second	1 operation

Life Test Criteria	
Insulation Resistance Throughout the Life Test	100 MΩ
Life Test Failures	0.0 %
Failures During Environmental Cycling w/ surges	0.0 %
Fail-Short (vented or non-vented gas tube)	> 30 Arms, simultaneously
Operating Temperature	-55 to +85 °C
Moisture Sensitivity Level	1
ESD Classification (HBM)	N/A

Notes:

[1] Network Applied
[2] Exceeds Telcordia (Bellcore) GR 1361
[3] Surpasses Telcordia GR 974
[4] RUS (REA) PE-80
[5] Protector may short to ground
Line to Line voltage is approximately 1.8 to 2 times the stated Line to Ground breakdown voltage.

OBSOLETE

WARNING Cancer and Reproductive Harm
www.P65Warnings.ca.gov

Specifications are subject to change without notice.
Users should verify actual device performance in their specific applications.
The products described herein and this document are subject to specific legal disclaimers as set forth on the last page of this document, and at www.bourns.com/docs/legal/disclaimer.pdf.

Features (Continued)

- Meets test requirements of Telcordia GR 974, GR1361, SR 5165 and RUS PE-80
- Telcordia Analysis report DA-1843
- High-speed network compatible
- Binding post or optional Insulation Displacement Connectors (IDC)
- c UL us UL Listed per UL 497 (File: E53117)

2377-45 Series Digi-Guard™ – MSP® Maximum Duty Station Protector

BOURNS®

Product Dimensions

2377-45-HS, 2377-45-BC

DIMENSIONS: MM (INCHES)

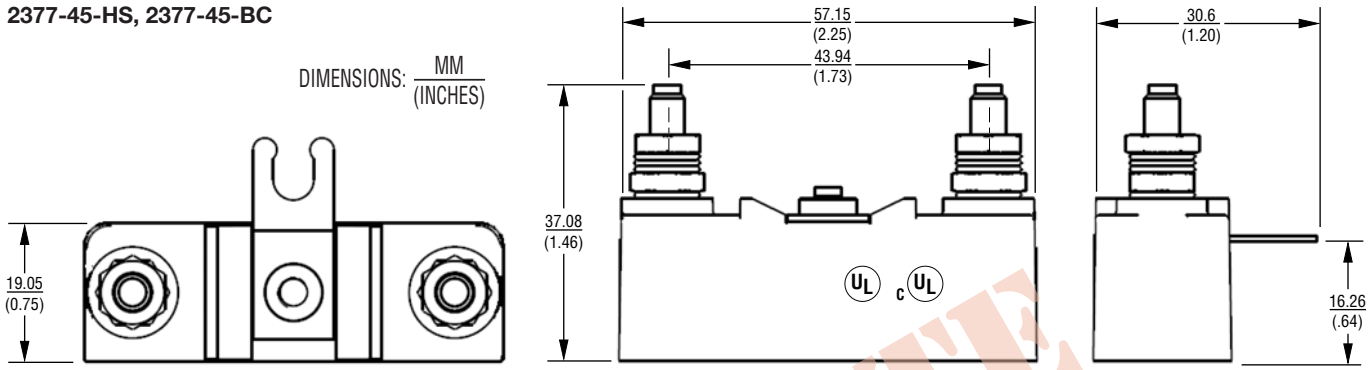

2377-45-HS-IDC, 2377-45-BC-IDC

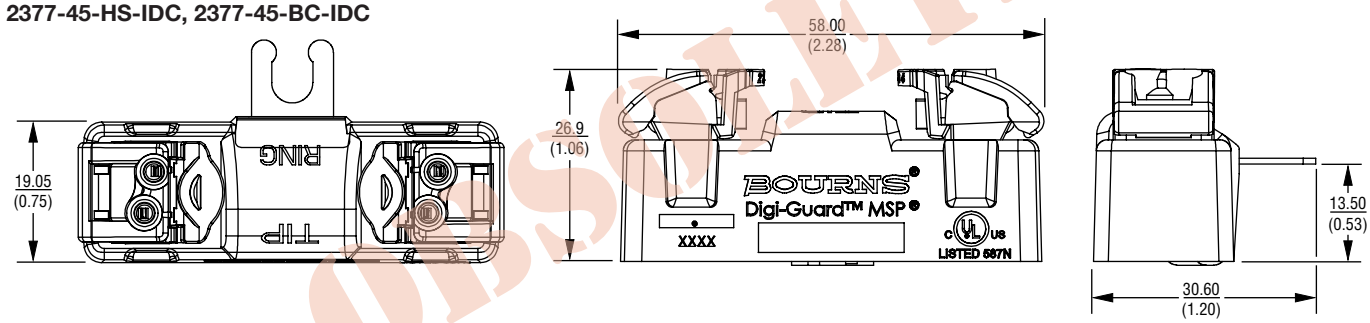

2372-02 Ground Mounting Stud (order separately)

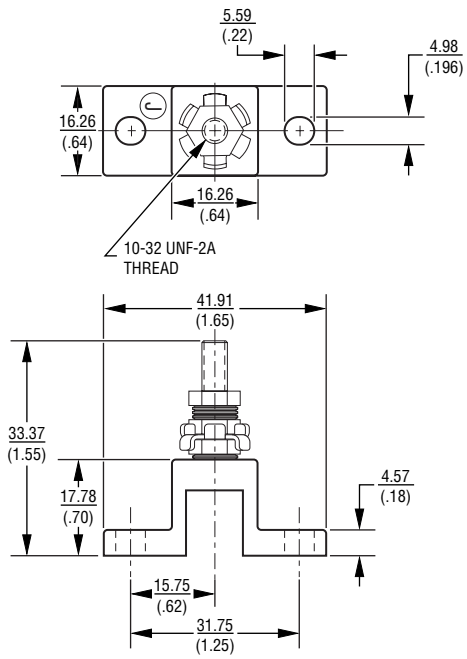

How To Order

2377-45-HS ..... Binding Post Connectors
2377-45-BC ..... Balanced Capacitance, Binding Post Connectors
2377-45-HS-IDC ..... Insulation Displacement Connectors
2377-45-BC-IDC ..... Balanced Capacitance, Insulation Displacement Connectors

Related Products



80052.....Test Clip for IDC

80053..... Insulation Tool for IDC

REV. R 11/25

"Bourns", "MSP", and "TRIGARD" are registered trademarks of Bourns, Inc.
"Digi-Guard" is a trademark of Bourns, Inc.
Specifications are subject to change without notice.
Users should verify actual device performance in their specific applications.
The products described herein and this document are subject to specific legal disclaimers as set forth on the last page of this document, and at www.bourns.com/docs/legal/disclaimer.pdf.

OBSOLETE

Legal Disclaimer Notice

BOURNS®

This legal disclaimer applies to purchasers and users of Bourns® products manufactured by or on behalf of Bourns, Inc. and its affiliates (collectively, "Bourns").

Unless otherwise expressly indicated in writing, Bourns® products and data sheets relating thereto are subject to change without notice. Users should check for and obtain the latest relevant information and verify that such information is current and complete before placing orders for Bourns® products.

The characteristics and parameters of a Bourns® product set forth in its data sheet are based on laboratory conditions, and statements regarding the suitability of products for certain types of applications are based on Bourns' knowledge of typical requirements in generic applications. The characteristics and parameters of a Bourns® product in a user application may vary from the data sheet characteristics and parameters due to (i) the combination of the Bourns® product with other components in the user's application, or (ii) the environment of the user application itself. The characteristics and parameters of a Bourns® product also can and do vary in different applications and actual performance may vary over time. Users should always verify the actual performance of the Bourns® product in their specific devices and applications, and make their own independent judgments regarding the amount of additional test margin to design into their device or application to compensate for differences between laboratory and real world conditions.

Unless Bourns has explicitly designated an individual Bourns® product as meeting the requirements of a particular industry standard (e.g., ISO/TS 16949) or a particular qualification (e.g., UL listed or recognized), Bourns is not responsible for any failure of an individual Bourns® product to meet the requirements of such industry standard or particular qualification. Users of Bourns® products are responsible for ensuring compliance with safety-related requirements and standards applicable to their devices or applications.

Bourns® products are not recommended, authorized or intended for use in nuclear, lifesaving, life-critical or life-sustaining applications, nor in any other applications where failure or malfunction may result in personal injury, death, or severe property or environmental damage. Unless expressly and specifically approved in writing by two authorized Bourns representatives on a case-by-case basis, use of any Bourns® products in such unauthorized applications might not be safe and thus is at the user's sole risk. Life-critical applications include devices identified by the U.S. Food and Drug Administration as Class III devices and generally equivalent classifications outside of the United States.

Bourns expressly identifies those Bourns® standard products that are suitable for use in automotive applications on such products' data sheets in the section entitled "Applications." Unless expressly and specifically approved in writing by two authorized Bourns representatives on a case-by-case basis, use of any other Bourns® standard products in an automotive application might not be safe and thus is not recommended, authorized or intended and is at the user's sole risk. If Bourns expressly identifies a sub-category of automotive application in the data sheet for its standard products (such as infotainment or lighting), such identification means that Bourns has reviewed its standard product and has determined that if such Bourns® standard product is considered for potential use in automotive applications, it should only be used in such sub-category of automotive applications. Any reference to Bourns® standard product in the data sheet as compliant with the AEC-Q standard or "automotive grade" does not by itself mean that Bourns has approved such product for use in an automotive application.

Bourns® standard products are not tested to comply with United States Federal Aviation Administration standards generally or any other generally equivalent governmental organization standard applicable to products designed or manufactured for use in aircraft or space applications. Bourns expressly identifies Bourns® standard products that are suitable for use in aircraft or space applications on such products' data sheets in the section entitled "Applications." Unless expressly and specifically approved in writing by two authorized Bourns representatives on a case-by-case basis, use of any other Bourns® standard product in an aircraft or space application might not be safe and thus is not recommended, authorized or intended and is at the user's sole risk.

The use and level of testing applicable to Bourns® custom products shall be negotiated on a case-by-case basis by Bourns and the user for which such Bourns® custom products are specially designed. Absent a written agreement between Bourns and the user regarding the use and level of such testing, the above provisions applicable to Bourns® standard products shall also apply to such Bourns® custom products.

Users shall not sell, transfer, export or re-export any Bourns® products or technology for use in activities which involve the design, development, production, use or stockpiling of nuclear, chemical or biological weapons or missiles, nor shall they use Bourns® products or technology in any facility which engages in activities relating to such devices. The foregoing restrictions apply to all uses and applications that violate national or international prohibitions, including embargos or international regulations. Further, Bourns® products and Bourns technology and technical data may not under any circumstance be exported or re-exported to countries subject to international sanctions or embargoes. Bourns® products may not, without prior authorization from Bourns and/or the U.S. Government, be resold, transferred, or re-exported to any party not eligible to receive U.S. commodities, software, and technical data.

To the maximum extent permitted by applicable law, Bourns disclaims (i) any and all liability for special, punitive, consequential, incidental or indirect damages or lost revenues or lost profits, and (ii) any and all implied warranties, including implied warranties of fitness for particular purpose, non-infringement and merchantability.

For your convenience, copies of this Legal Disclaimer Notice with German, Spanish, Japanese, Traditional Chinese and Simplified Chinese bilingual versions are available at:

Web Page: http://www.bourns.com/legal/disclaimers-terms-and-policies

PDF: http://www.bourns.com/docs/Legal/disclaimer.pdf