OMNIMATE Signal - series BL/SL 3.50
BL-I/O 3.50/10F CJC AU BK BX

Weidmüller Interface GmbH & Co. KG
Klingenbergstraße 26
D-32758 Detmold
Germany
Fon: +49 5231 14-0
Fax: +49 5231 14-292083
www.weidmueller.com



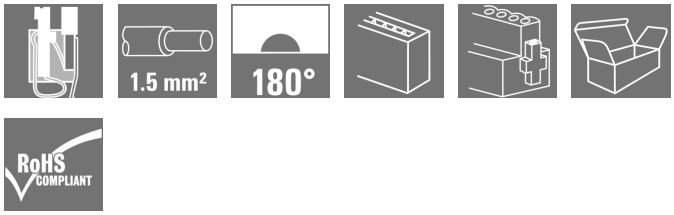

Connect efficiently - in a small space: female header with spring connection (PUSH IN) as a plug-in connection level; used together with male headers in 3.50 mm pitch.

General ordering data

Type	BL-I/O 3.50/10F CJC AU BK BX
Order No.	2471390000
Version	PCB plug-in connector, female plug, 3.50 mm, Number of poles: 10, 180°, PUSH IN, Tension-clamp connection, Clamping range, max. : 1.5 mm², Box
GTIN (EAN)	4050118585599
Qty.	20 pc(s).
Product data	IEC: / 2.2 A / 0.2 - 1.5 mm² UL: 50 V / 5 A / AWG 24 - AWG 16
Packaging	Box

OMNIMATE Signal - series BL/SL 3.50
BL-I/O 3.50/10F CJC AU BK BX

Weidmüller Interface GmbH & Co. KG
Klingenbergstraße 26
D-32758 Detmold
Germany
Fon: +49 5231 14-0
Fax: +49 5231 14-292083
www.weidmueller.com

Technical data

Dimensions and weights

Width	42 mm	Width (inches)	1.654 inch
Height	10.3 mm	Height (inches)	0.406 inch
Net weight	11.548 g		

System Parameters

Product family	OMNIMATE Signal - series BL/SL 3.50	Type of connection	Field connection
Wire connection method	PUSH IN, Tension-clamp connection	Pitch in mm (P)	3.5 mm
Pitch in inches (P)	0.138 inch	Conductor outlet direction	180°
Number of poles	10	L1 in mm	31.5 mm
L1 in inches	1.24 inch	Pin series quantity	1
Rated cross-section	1 mm²	Touch-safe protection acc. to DIN VDE 57 106	Safe from finger touch
Touch-safe protection acc. to DIN VDE 0470	IP 20	Can be coded	Yes
Stripping length	8 mm	Screwdriver blade	0.4 x 2.5
Screwdriver blade standard	DIN 5264	Plugging force/pole, max.	6 N
Pulling force/pole, max.	6 N		

Material data

Insulating material	PBT	Colour	black
Colour of operational elements	orange	Material of operational elements	PBT
Colour chart (similar)	RAL 9011	Insulation strength	≥ 10^8 Ω
Contact base material	Copper alloy	Contact material	Copper alloy
Contact surface	Gold-plated		

Conductors suitable for connection

Clamping range, min.	0.2 mm²
Clamping range, max.	1.5 mm²
Wire connection cross section AWG, min.	AWG 24
Wire connection cross section AWG, max.	AWG 16
Solid, min. H05(07) V-U	0.2 mm²
Solid, max. H05(07) V-U	1.5 mm²
Flexible, min. H05(07) V-K	0.2 mm²
Flexible, max. H05(07) V-K	1.5 mm²
w. plastic collar ferrule, DIN 46228 pt 4, min.	0.2 mm²
w. plastic collar ferrule, DIN 46228 pt 4, max.	0.75 mm²
w. wire end ferrule, DIN 46228 pt 1, min.	0.2 mm²
w. wire end ferrule, DIN 46228 pt 1, max.	1 mm²
Plug gauge in accordance with EN 60999 a x b; ø	2.4 mm x 1.5 mm; 1.9mm

OMNIMATE Signal - series BL/SL 3.50
BL-I/O 3.50/10F CJC AU BK BX

Weidmüller Interface GmbH & Co. KG
Klingenbergstraße 26
D-32758 Detmold
Germany
Fon: +49 5231 14-0
Fax: +49 5231 14-292083
www.weidmueller.com

Technical data

Clampable conductor	Cross-section for conductor connection	Type	fine-wired
		nominal	0.25 mm²
	wire end ferrule	Stripping length	nominal 10 mm
		Recommended wire-end ferrule	H0,25/12 HBL
	Cross-section for conductor connection	Type	fine-wired
		nominal	0.34 mm²
	wire end ferrule	Stripping length	nominal 10 mm
		Recommended wire-end ferrule	H0,34/12 TK
	Cross-section for conductor connection	Type	fine-wired
		nominal	0.5 mm²
	wire end ferrule	Stripping length	nominal 10 mm
		Recommended wire-end ferrule	H0,5/14 OR
	Cross-section for conductor connection	Type	fine-wired
		nominal	0.75 mm²
	wire end ferrule	Stripping length	nominal 10 mm
		Recommended wire-end ferrule	H0,75/14T HBL
Reference text	The outside diameter of the plastic collar should not be larger than the pitch (P).		
Max. clamping range	1.5 mm²		

Rated data acc. to IEC

tested acc. to standard	IEC 60664-1, IEC 61984	Rated current, min. number of poles (Tu=20°C)	2.2 A
Rated current, max. number of poles (Tu=20°C)	2 A	Rated current, min. number of poles (Tu=40°C)	2.2 A
Rated current, max. number of poles (Tu=40°C)	2 A	Rated voltage for surge voltage class / pollution degree III/3	50 V
Rated impulse voltage for surge voltage class/ contamination degree III/3	0.8 kV	Short-time withstand current resistance	3 x 1s with 120 A

Rated data acc. to CSA

Institute (CSA)		Certificate No. (CSA)	200039-1202189
Rated voltage (Use group B / CSA)	50 V	Rated voltage (Use group D / CSA)	50 V
Rated current (Use group B / CSA)	5 A	Rated current (Use group D / CSA)	5 A
Wire cross-section, AWG, min.	AWG 22	Wire cross-section, AWG, max.	AWG 16
Reference to approval values	Specifications are maximum values, details - see approval certificate.		

Rated data acc. to UL 1059

Institute (UR)		Certificate No. (UR)	E60693
Rated voltage (Use group B / UL 1059)	50 V	Rated voltage (Use group D / UL 1059)	50 V
Rated current (Use group B / UL 1059)	5 A	Rated current (Use group D / UL 1059)	5 A
Wire cross-section, AWG, min.	AWG 24	Wire cross-section, AWG, max.	AWG 16
Reference to approval values	Specifications are maximum values, details - see approval certificate.		

OMNIMATE Signal - series BL/SL 3.50
BL-I/O 3.50/10F CJC AU BK BX

Weidmüller Interface GmbH & Co. KG
Klingenbergstraße 26
D-32758 Detmold
Germany
Fon: +49 5231 14-0
Fax: +49 5231 14-292083
www.weidmueller.com

Technical data

Packing

Packaging	Box	VPE length	170 mm
VPE width	95 mm	VPE height	40 mm

Resistance parameters

R_{25}	10 kΩ	Temperature coefficient (+25 °C)	-4.4 %/°C
Thermistor beta, β (0 to +50 °C)	3,892 °K	Power loss	2 mW / °C

Classifications

ETIM 6.0	EC002638	ETIM 7.0	EC002638
eClass 9.0	27-44-03-09	eClass 9.1	27-44-03-09
eClass 10.0	27-44-03-09		

Notes

Notes

- Additional colours on request
- P on drawing = pitch
- Crimp form A for wire end ferrules with PZ 6/5 crimping tool are recommended for the largest cable sizes.
- Total load-carrying capacity of the potential bridges when feeding with 1.5 mm² is max. 17.5 A (so the capacity is 2.18 A for poles 2 through 9)
- Wire end ferrule without plastic collar to DIN 46228/1
- Wire end ferrule with plastic collar to DIN 46228/4
- Conductor < 0.2 mm² tinned
- Max. outer diameter of the conductor: 2.9 mm
- Rated data refer only to the component itself. Clearance and creepage distances to other components are to be designed in accordance with the relevant application standards.

IPC conformity: Conformity: The products are developed, manufactured and delivered according international recognized standards and norms and comply with the assured properties in the data sheet resp. fulfill decorative properties in accordance with IPC-A-610 "Class 2". Further claims on the products can be evaluated on request.

Approvals

Approvals

ROHS: Conform

Downloads

White Paper wire connection: Download Whitepaper

Creation date October 21, 2019 11:52:33 PM CEST

OMNIMATE Signal - series BL/SL 3.50
BL-I/O 3.50/10F CJC AU BK BX

Weidmüller Interface GmbH & Co. KG
Klingenbergstraße 26
D-32758 Detmold
Germany
Fon: +49 5231 14-0
Fax: +49 5231 14-292083
www.weidmueller.com

Drawings

Product benefits

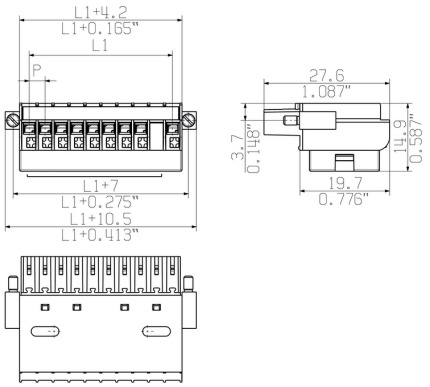

PUSH IN - fast and secure
Invented by Weidmüller

Product benefits

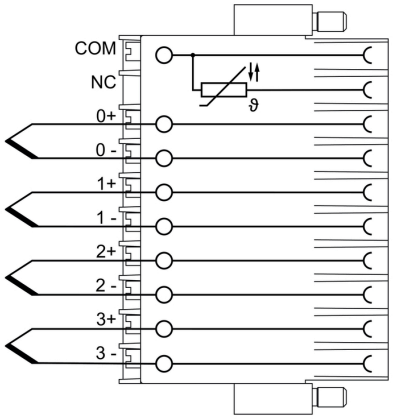

Integrated electronics
For more space on the circuit board

Product benefits



Solid PUSH IN contact
Safe and durable

Product benefits

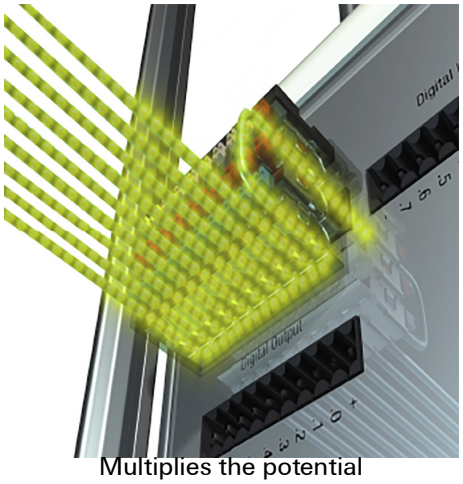

Multiplies the potential
Low wiring costs

Creation date October 21, 2019 11:52:33 PM CEST

Dimensions without tolerances are no check dimensions

The English version is binding

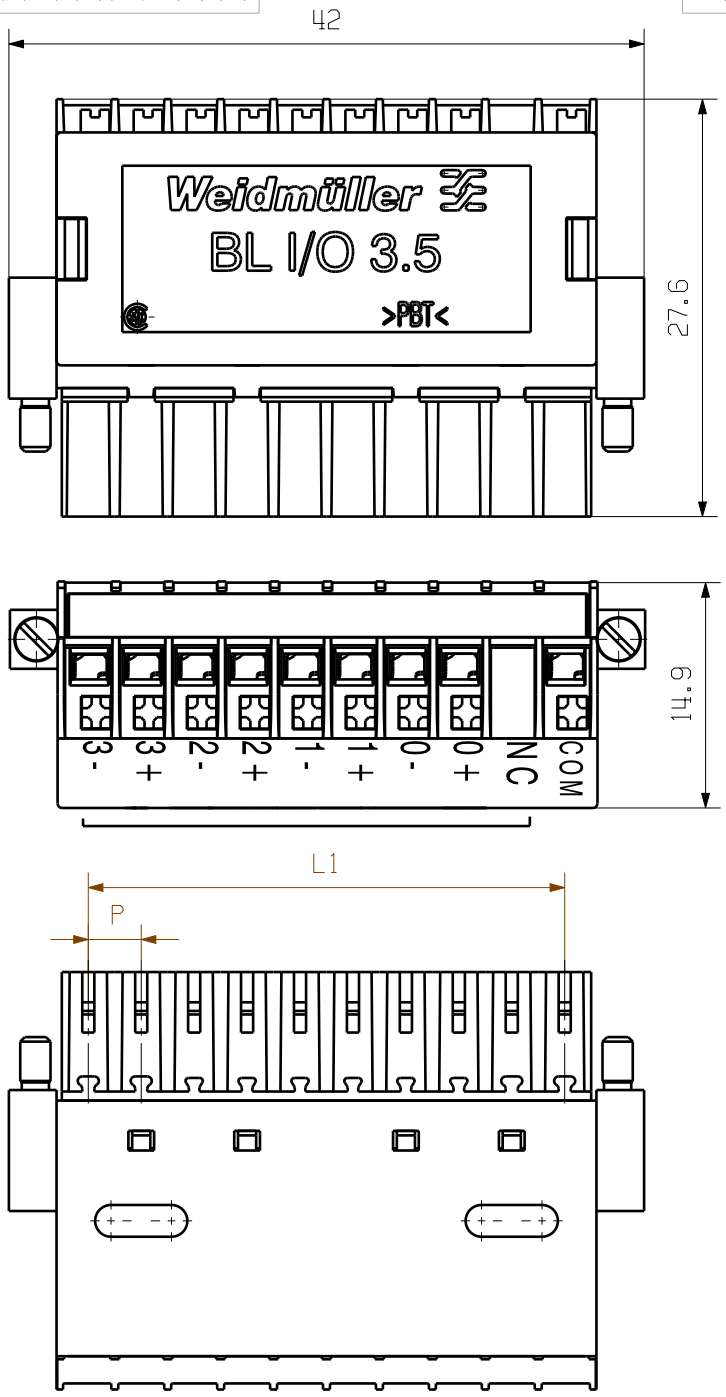

For the mounting of PCBs, it should be noted that the rated data given in the catalogue relates only to the connection elements. The neccessary creepage and clearance paths must be observed in connection with the respective applicant in accordance to VDE 0110. The current-carrying capacity and pitch tolerance is to be determined according to DIN IEC 326 part 3 very fine.

Weidmueller connectors are tested to the DIN VDE 0627 standard, and are valid for its field of application. Provided that the connectors are used to the intended purpose, all requirements with respect to the occuring of electrical, mechanical, thermic and corrosive stress will be satisfied.

P = 3.50 Raster Pitch

L1 = 31.5

The reproduction, distribution and utilization of this document as well as the communication of its contents to others without explicit authorization is prohibited. Offenders will be held liable for the payment of damages. Weidmueller exclusively reserves the right to file for patents, utility models or designs.

© Weidmueller Interface GmbH & Co. KG

General tolerance: DIN ISO 2768-mK

RoHS COMPLIANT

92897/5 22.03.17 HELIS_MA .	00	Modification	

. .

Cat.no.: 2471390000

Weidmüller

4 63899 01

Drawing no. Issue no.

Sheet 01 of 01 sheets

	Date	Name
Drawn	15.08.2016	AMANN_A
Responsible		AMANN_A
Checked	29.03.2017	HELIS_MA
Approved		LANG_T

Scale: 2:1

Supersedes: .

BL I/O 3.50/10F CJC

BUCHSENSTECKER

FEMALE PLUG

Product file: BL-I/O 3.50 7366