Extension module - RAD-IN-8D - 2867144

Please be informed that the data shown in this PDF Document is generated from our Online Catalog. Please find the complete data in the user's documentation. Our General Terms of Use for Downloads are valid (http://download.phoenixcontact.com)



Digital extension module with 8 digital inputs

Key commercial data

Packing unit	1 1
Weight per Piece (excluding packing)	176.2 GRM
Custom tariff number	85177090
Country of origin	Canada

Technical data

Dimensions

Width	22.5 mm
Height	99 mm
Depth	114.5 mm

Ambient conditions

Ambient temperature (operation)	-20 °C ... 65 °C
Ambient temperature (storage/transport)	-40 °C ... 85 °C
Degree of protection	IP20

Digital input

Input voltage range	5 V AC/DC ... 30 V AC/DC
Switching threshold "0" signal, voltage	max. 1.5 V DC
Switching threshold "1" signal voltage	min. 5 V DC

Supply

Extension module - RAD-IN-8D - 2867144

Technical data

Supply

Supply voltage range	9 V DC ... 30 V DC (via bus foot)
Typical current consumption	25 mA
Max. current consumption	30 mA

General

Mounting position	Any
Assembly instructions	on standard DIN rail NS 35 in accordance with EN 60715
Housing material	Polyamide PA non-reinforced
Conformance	CE-compliant
ATEX	# II 3 G EEx nL IIC
IECEx	Ex nL IIC
UL, USA / Canada	Class I, Div. 2, Groups A, B, C, D

Connection data

Conductor cross section solid min.	0.2 mm²
Conductor cross section solid max.	4 mm²
Conductor cross section stranded min.	0.2 mm²
Conductor cross section stranded max.	2.5 mm²
Conductor cross section AWG/kcmil min.	24
Conductor cross section AWG/kcmil max	14
Connection method	Screw connection
Stripping length	8 mm
Screw thread	M3

Classifications

eCl@ss

eCl@ss 4.0	27250312
eCl@ss 4.1	27250312
eCl@ss 5.0	27242208
eCl@ss 5.1	27242208
eCl@ss 6.0	27242208
eCl@ss 7.0	27242208
eCl@ss 8.0	27242208

ETIM

ETIM 2.0	EC000310
ETIM 3.0	EC000310

Extension module - RAD-IN-8D - 2867144

Classifications

ETIM

ETIM 4.0	EC000310
ETIM 5.0	EC000310

UNSPSC

UNSPSC 6.01	30211506
UNSPSC 7.0901	43223108
UNSPSC 11	39121008
UNSPSC 12.01	43223108
UNSPSC 13.2	43223108

Drawings

Block diagram

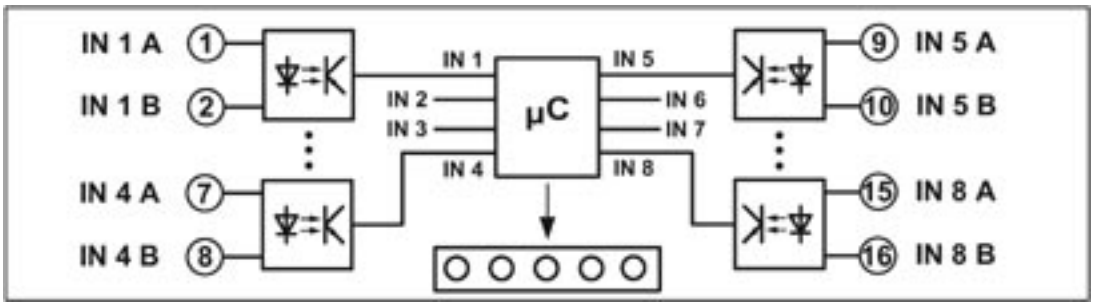

© Phoenix Contact 2013 - all rights reserved
http://www.phoenixcontact.com