Technical Data Sheet		Rosenberger
QMA	Attenuator Plug/Jack 2 Watt	**28AS102-K30S3**

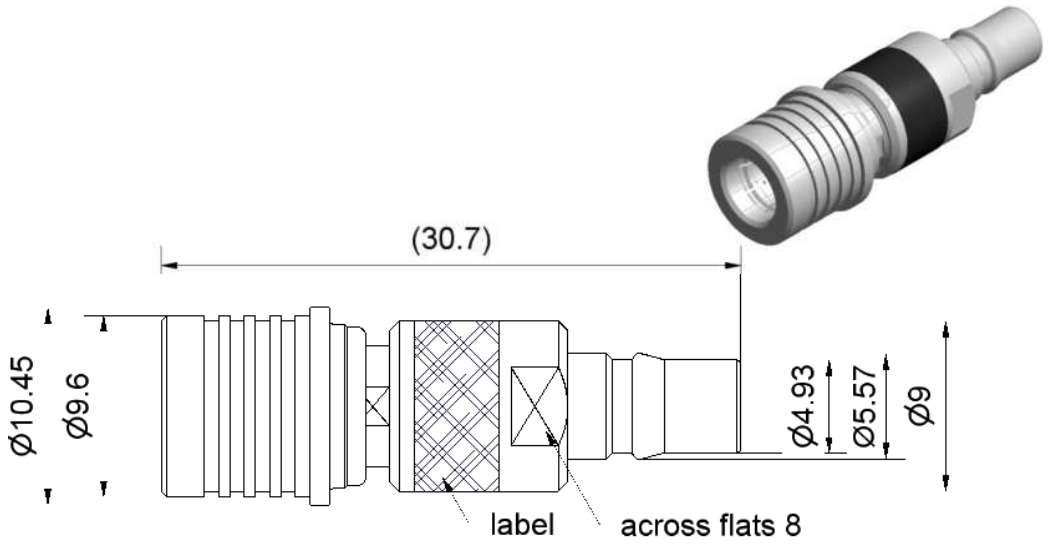

All dimensions are in mm; tolerances according to ISO 2768 m-H

Interface

According to	Rosenberger 28S000-000, series QMA Rosenberger 28K000-000, series QMA Rosenberger is an authorised QLF® manufacturer

Documents

N/A

Material and plating

Connector parts	**Material**	**Plating**
Center contact - plug	CuBe	Gold, min. 1.27 µm, over nickel
Center contact - jack	CuBe	Gold, min. 1.27 µm, over nickel
Outer contact	Stainless steel	Passivated
Dielectric	PTFE	
Unlocking sleeve	Brass	White bronze(e.g. Optalloy®)
Substrate	Al_2O_3	

Dieses Dokument ist urheberrechtlich geschützt ● This document is protected by copyright ● Rosenberger Hochfrequenztechnik GmbH & Co. KG

Rosenberger Hochfrequenztechnik GmbH & Co. KG
P.O.Box 1260 D-84526 Tittmoning Germany
www.rosenberger.de

Tel. : +49 8684 18-0
Fax : +49 8684 18-499
Email : info@rosenberger.de

Technical Data Sheet		Rosenberger
QMA	Attenuator Plug/Jack 2 Watt	**28AS102-K30S3**

Electrical data

Impedance	50 Ω
Frequency range	DC to 6 GHz
Return loss	≥ 26.5 dB, DC to 2 GHz ≥ 20.8 dB, 2 GHz to 6 GHz
Attenuation	30 dB ± 0.3 dB, DC to 2 GHz 30 dB ± 0.5 dB, 2 GHz to 6 GHz
Power handling	≤ 2 W at 25°C

Mechanical data

Mating cycles	≥ 100
Engagement force	typ. 25 N
Disengagement force	typ. 20 N
Retention force for interface	60 N min.
Gauge	0.00 mm to 0.25 mm

Environmental data

Temperature range	-40°C to +85°C
RoHS	compliant

Packing

Standard	1 pce in bag
Weight	6.8 g/pce

While the information has been carefully compiled to the best of our knowledge, nothing is intended as representation or warranty on our part and no statement herein shall be construed as recommendation to infringe existing patents. In the effort to improve our products, we reserve the right to make changes judged to be necessary.

Dieses Dokument ist urheberrechtlich geschützt ● This document is protected by copyright ● Rosenberger Hochfrequenztechnik GmbH & Co. KG

Draft	Date	Approved	Date
Kerstin Herzog	04/01/07	Markus Müller	13/09/13

Rev.	Engineering change number	Name	Date
c00	13-0547	Marion Striegler	10/09/13

Rosenberger Hochfrequenztechnik GmbH & Co. KG
P.O.Box 1260 D-84526 Tittmoning Germany
www.rosenberger.de

Tel. : +49 8684 18-0
Fax : +49 8684 18-499
Email : info@rosenberger.de