Round cable - VIP-CAB-FLK14/AXIO/0,14/4,0M - 2901610

Please be informed that the data shown in this PDF Document is generated from our Online Catalog. Please find the complete data in the user's documentation. Our General Terms of Use for Downloads are valid (http://phoenixcontact.com/download)

Round cable set for Axioline Realtime I/O with Single wires (8-position) (The wires are marked and fitted with ferrules.) on 1 x IDC/FLK socket strip (14-position, 90 °-Out put), Cable length: 4 m



Why buy this product

- 8 pre-assembled open ends, for connection to the Axioline realtime I/O system
- 14-pos. connector, molded
- Labeling field on plug
- 1:1 connection
- Transmission of groups of 8 channels

RoHS

Key Commercial Data

Packing unit	1 STK
Custom tariff number	85444290
Country of origin	Germany

Technical data

General

Nominal voltage U_N	< 50 V AC
	60 V DC
Max. current carrying capacity per path	1 A
Max. conductor resistance	0.16 Ω/m
Length of cable	4 m
Single wire, cross section	0.14 mm²
Single wire, cross section [AWG]	26
Conductor construction: Number of litz wires:	7
Single wire, material	Cu tin-plated

Round cable - VIP-CAB-FLK14/AXIO/0,14/4,0M - 2901610

Technical data

General

External diameter	6.4 mm
Cable, preassembly	Insulation displacement, IEC 60352-4/DIN EN 60352-4
Shielding	no

Environmental conditions

Ambient temperature (operation)	-20 °C ... 50 °C
Ambient temperature (storage/transport)	-20 °C ... 70 °C
Flame resistance	IEC 60332-1
	DIN VDE 0482 Part 332-1

Connector, module side

Connection name	Field level
Connection method	IDC/FLK socket strip
Conductor cross section AWG	26
Number of connections	1
Number of positions	14
Exit angle	90 °
Pitch	2.54 mm

Connector, controller side

Connection name	Controller level
Connection method	Single wires
Number of positions	8
Note	The wires are marked and fitted with ferrules.

Supported controller

Controller	PHOENIX CONTACT Axioline
- suitable I/O card	AXL DI 16/4
	AXL DI 32/1
	AXL DO 16/3
	AXL DO 32/1

Standards and Regulations

Flame resistance	IEC 60332-1
	DIN VDE 0482 Part 332-1

Color code

Connector 1 = connector 2 (optional) = wire color	IDC/FLK14 (1) = black
	IDC/FLK14 (2) = brown
	IDC/FLK14 (3) = red
	IDC/FLK14 (4) = orange

Round cable - VIP-CAB-FLK14/AXIO/0,14/4,0M - 2901610

Technical data

Color code

	IDC/FLK14 (5) = yellow
	IDC/FLK14 (6) = green
	IDC/FLK14 (7) = blue
	IDC/FLK14 (8) = violet

Drawings

Dimensional drawing

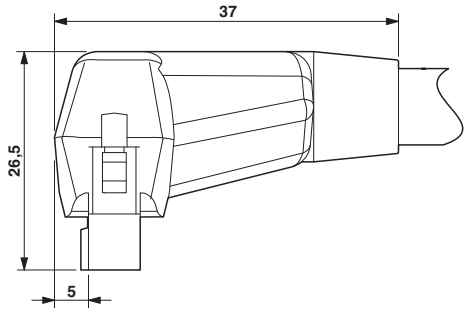

Classifications

eCl@ss

eCl@ss 4.0	27060306
eCl@ss 4.1	27060306
eCl@ss 5.0	27061801
eCl@ss 6.0	27249205
eCl@ss 7.0	27249205
eCl@ss 8.0	27249205
eCl@ss 9.0	27242220

ETIM

ETIM 2.0	EC000237
ETIM 3.0	EC000237
ETIM 4.0	EC000237
ETIM 5.0	EC000237

UNSPSC

UNSPSC 6.01	26121620
UNSPSC 7.0901	26121620

Round cable - VIP-CAB-FLK14/AXIO/0,14/4,0M - 2901610

Classifications

UNSPSC

UNSPSC 11	26121620
UNSPSC 12.01	26121620
UNSPSC 13.2	26121620

Approvals

Approvals

Approvals

EAC / UL Listed / cUL Listed / cULus Listed

Ex Approvals

Approval details

EAC RU C-DE.A*30.B00767

UL Listed http://database.ul.com/cgi-bin/XYV/template/LISEXT/1FRAME/index.htm FILE E 238705

cUL Listed http://database.ul.com/cgi-bin/XYV/template/LISEXT/1FRAME/index.htm FILE E 238705

cULus Listed

Phoenix Contact 2016 © - all rights reserved
http://www.phoenixcontact.com