828277-6 Product Details

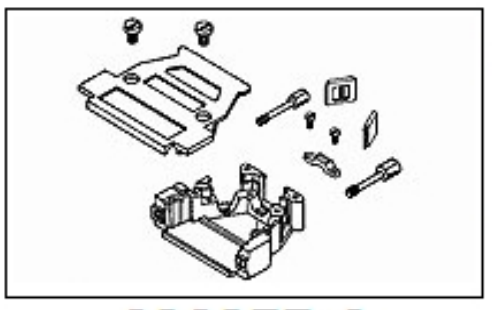

828277-6

TE Internal Number: 828277-6

Active

Cable Clamps

Always EU RoHS/ELV Compliant (Statement of Compliance)

Product Highlights:

- Backshell/Cable Clamp
- Cable Clamp Type = Two-Piece RFI/EMI Shield
- Straight(180°)/45° Cable Exit Angle
- Cable Insulation Diameter = 7.00 mm
- Number of Positions = 15

View all Features

Add to My Part List | Request Sample | Find Similar Products | Buy Product

Live Product Chat

Quick Links

- Check Pricing & Availability
- Search for Tooling
- Product Feature Selector
- Contact Us About This Product

Documentation & Additional Information

Product Drawings:
- COVER FOR HD-20 15POLIG (PDF, English)

Catalog Pages/Data Sheets:
- None Available

Product Specifications:
- None Available

Application Specifications:
- None Available

Instruction Sheets:
- None Available

CAD Files:
- None Available

List all Documents

Additional Information:
- Product Line Information

Related Products:
- Tooling

Product Features (Please use the Product Drawing for all design activity)

Product Type Features:
- Product Type = Backshell/Cable Clamp
- Cable Clamp Type = Two-Piece RFI/EMI Shield
- Number of Positions = 15
- Shell Size = 2
- Shielded = Yes
- Screws and Retainer Clips = Without
- Grommets = Without
- Slide Latch = Without
- Thread Size = 4-40

Body Related Features:
- Cable Exit Angle = Straight(180°)/45°
- Cable Insulation Diameter (mm [in]) = 7.00 [0.276]
- Cable Clamp Material = Polycarbonate
- Shield Plating = Bright Nickel over Copper
- Cover Flammability Rating = UL 94V-0

Industry Standards:
- RoHS/ELV Compliance = RoHS compliant, ELV compliant
- Lead Free Solder Processes = Not relevant for lead free process
- RoHS/ELV Compliance History = Always was RoHS compliant

Packaging Related Features:
- Packaging Method = Individual Kit
- Packaging Quantity = 50

Other:
- Brand = AMP

© 2009 Tyco Electronics Corporation All Rights Reserved