**2N2906 2N2906A**
**2N2907 2N2907A**

**PNP SILICON TRANSISTOR**



**TO-18 CASE**

www.centralsemi.com

**DESCRIPTION:**

The CENTRAL SEMICONDUCTOR 2N2906, 2N2907 series types are silicon PNP epitaxial planar transistors designed for small signal, general purpose switching applications.

**MARKING: FULL PART NUMBER**

| **MAXIMUM RATINGS:** ($T_A$=25°C) | **SYMBOL** | **2N2906 2N2907** | **2N2906A 2N2907A** | **UNITS** |
|---|---|---|---|---|
| Collector-Base Voltage | $V_{CBO}$ | 60 | 60 | V |
| Collector-Emitter Voltage | $V_{CEO}$ | 40 | 60 | V |
| Emitter-Base Voltage | $V_{EBO}$ | 5.0 | | V |
| Continuous Collector Current | $I_C$ | 600 | | mA |
| Power Dissipation | $P_D$ | 400 | | mW |
| Power Dissipation ($T_C$=25°C) | $P_D$ | 1.8 | | W |
| Operating and Storage Junction Temperature | $T_J$, $T_{stg}$ | -65 to +200 | | °C |
| Thermal Resistance | $\Theta_{JA}$ | 438 | | °C/W |
| Thermal Resistance | $\Theta_{JC}$ | 97 | | °C/W |

**ELECTRICAL CHARACTERISTICS:** ($T_A$=25°C unless otherwise noted)

| | | **2N2906 2N2907** | | **2N2906A 2N2907A** | | |
|---|---|---|---|---|---|---|
| **SYMBOL** | **TEST CONDITIONS** | **MIN** | **MAX** | **MIN** | **MAX** | **UNITS** |
| $I_{CBO}$ | $V_{CB}$=50V | - | 20 | - | 10 | nA |
| $I_{CBO}$ | $V_{CB}$=50V, $T_A$=150°C | - | 20 | - | 10 | µA |
| $I_{CEV}$ | $V_{CE}$=30V, $V_{EB}$=0.5V | - | 50 | - | 50 | nA |
| $BV_{CBO}$ | $I_C$=10µA | 60 | - | 60 | - | V |
| $BV_{CEO}$ | $I_C$=10mA | 40 | - | 60 | - | V |
| $BV_{EBO}$ | $I_E$=10µA | 5.0 | - | 5.0 | - | V |
| $V_{CE(SAT)}$ | $I_C$=150mA, $I_B$=15mA | - | 0.4 | - | 0.4 | V |
| $V_{CE(SAT)}$ | $I_C$=500mA, $I_B$=50mA | - | 1.6 | - | 1.6 | V |
| $V_{BE(SAT)}$ | $I_C$=150mA, $I_B$=15mA | - | 1.3 | - | 1.3 | V |
| $V_{BE(SAT)}$ | $I_C$=500mA, $I_B$=50mA | - | 2.6 | - | 2.6 | V |
| $f_T$ | $V_{CE}$=20V, $I_C$=50mA, f=100MHz | 200 | - | 200 | - | MHz |
| $C_{ob}$ | $V_{CB}$=10V, $I_E$=0, f=1.0MHz | - | 8.0 | - | 8.0 | pF |
| $C_{ib}$ | $V_{EB}$=2.0V, $I_C$=0, f=1.0MHz | - | 30 | - | 30 | pF |
| $t_{on}$ | $V_{CC}$=30V, $I_C$=150mA, $I_{B1}$=15mA | - | 45 | - | 45 | ns |
| $t_{off}$ | $V_{CC}$=6.0V, $I_C$=150mA, $I_{B1}$=$I_{B2}$=15mA | - | 100 | - | 100 | ns |

**2N2906 2N2906A**
**2N2907 2N2907A**

**PNP SILICON TRANSISTOR**

**ELECTRICAL CHARACTERISTICS - Continued:** ($T_A$=25°C)

| | | 2N2906 / 2N2906A | | 2N2907 / 2N2907A | |
|---|---|---|---|---|---|
| **SYMBOL** | **TEST CONDITIONS** | **MIN** | **MAX** | **MIN** | **MAX** |
| $h_{FE}$ | $V_{CE}$=10V, $I_C$=0.1mA (2N2906, 2N2907) | 20 | - | 35 | - |
| $h_{FE}$ | $V_{CE}$=10V, $I_C$=0.1mA (2N2906A, 2N2907A) | 40 | - | 75 | - |
| $h_{FE}$ | $V_{CE}$=10V, $I_C$=1.0mA (2N2906, 2N2907) | 25 | - | 50 | - |
| $h_{FE}$ | $V_{CE}$=10V, $I_C$=1.0mA (2N2906A, 2N2907A) | 40 | - | 100 | - |
| $h_{FE}$ | $V_{CE}$=10V, $I_C$=10mA (2N2906, 2N2907) | 35 | - | 75 | - |
| $h_{FE}$ | $V_{CE}$=10V, $I_C$=10mA (2N2906A, 2N2907A) | 40 | - | 100 | - |
| $h_{FE}$ | $V_{CE}$=10V, $I_C$=150mA | 40 | 120 | 100 | 300 |
| $h_{FE}$ | $V_{CE}$=10V, $I_C$=500mA (2N2906, 2N2907) | 20 | - | 30 | - |
| $h_{FE}$ | $V_{CE}$=10V, $I_C$=500mA (2N2906A, 2N2907A) | 40 | - | 50 | - |

## TO-18 CASE - MECHANICAL OUTLINE

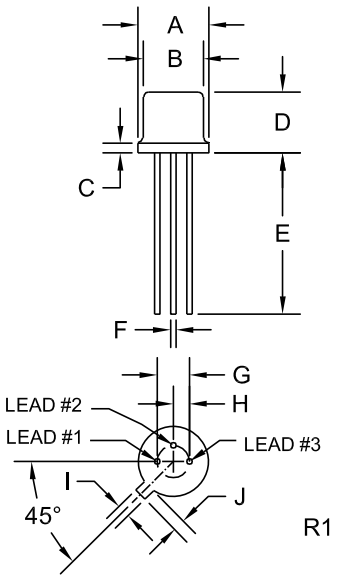


| DIMENSIONS | | | | |
|---|---|---|---|---|
| | INCHES | | MILLIMETERS | |
| SYMBOL | MIN | MAX | MIN | MAX |
| A (DIA) | 0.209 | 0.230 | 5.31 | 5.84 |
| B (DIA) | 0.178 | 0.195 | 4.52 | 4.95 |
| C | - | 0.030 | - | 0.76 |
| D | 0.170 | 0.210 | 4.32 | 5.33 |
| E | 0.500 | - | 12.70 | - |
| F (DIA) | 0.016 | 0.019 | 0.41 | 0.48 |
| G (DIA) | 0.100 | | 2.54 | |
| H | 0.050 | | 1.27 | |
| I | 0.036 | 0.046 | 0.91 | 1.17 |
| J | 0.028 | 0.048 | 0.71 | 1.22 |

TO-18 (REV: R1)

**LEAD CODE:**
1) Emitter
2) Base
3) Collector

**MARKING: FULL PART NUMBER**

R4 (30-January 2012)

## OUTSTANDING SUPPORT AND SUPERIOR SERVICES

### PRODUCT SUPPORT

Central's operations team provides the highest level of support to insure product is delivered on-time.

- Supply management (Customer portals)
- Inventory bonding
- Consolidated shipping options
- Custom bar coding for shipments
- Custom product packing

### DESIGNER SUPPORT/SERVICES

Central's applications engineering team is ready to discuss your design challenges. Just ask.

- Free quick ship samples (2nd day air)
- Online technical data and parametric search
- SPICE models
- Custom electrical curves
- Environmental regulation compliance
- Customer specific screening
- Up-screening capabilities
- Special wafer diffusions
- PbSn plating options
- Package details
- Application notes
- Application and design sample kits
- Custom product and package development

### REQUESTING PRODUCT PLATING

1. If requesting Tin/Lead plated devices, add the suffix " TIN/LEAD" to the part number when ordering (example: 2N2222A TIN/LEAD).
2. If requesting Lead (Pb) Free plated devices, add the suffix " PBFREE" to the part number when ordering (example: 2N2222A PBFREE).

### CONTACT US

**Corporate Headquarters & Customer Support Team**

Central Semiconductor Corp.
145 Adams Avenue
Hauppauge, NY 11788 USA
Main Tel: (631) 435-1110
Main Fax: (631) 435-1824
Support Team Fax: (631) 435-3388
www.centralsemi.com

**Worldwide Field Representatives:**
www.centralsemi.com/wwreps

**Worldwide Distributors:**
www.centralsemi.com/wwdistributors

For the latest version of Central Semiconductor's **LIMITATIONS AND DAMAGES DISCLAIMER**, which is part of Central's Standard Terms and Conditions of sale, visit: www.centralsemi.com/terms

http://www.centralsemi.com

# Product End of Life Notification

| | |
|---|---|
| **PDN ID:** | PDN01188 |
| **Notification Date:** | 10/06/21 |
| **Last Buy Date:** | 4/06/22 |
| **Last Shipment Date** | 10/06/22 |

Summary:The following PNP general purpose transistors are discontinued and now classified as of End of Life (EOL).

Although Central Semiconductor Corp. makes every effort to continue to produce devices that have been proclaimed EOL (End of Life) by other manufacturers, it is an accepted industry practice to discontinue certain devices when customer demand falls below a minimum level of sustainability. Accordingly, the following product(s) have been transitioned to End of Life status as part of Central's ongoing Product Management Process. Any replacement products are noted below. The effective date for placing last purchase orders will be six (6) months from the date of this notice and twelve (12) months from the notice date for final shipments, and minimum order quantities may apply. The last purchase and shipment dates may be extended if inventory is available.

*** All Plating types (PBFREE,TIN/LEAD) for each item listed are included in this notice.**

| Central Part Number | Suggested Replacement |
|---|---|
| PN2906A | N/A |
| PN2906A TRE | N/A |
| 2N2906 | N/A |
| 2N2906A | N/A |

Central would be happy to assist you by providing additional information or technical data to help locate an alternate source if we have no replacement available. Please email your requests to engineering@centralsemi.com.

DISCLAIMER: This End of Life (EOL) notification is in accordance with JEDEC standard JESD48 - Product Discontinuance. Central Semiconductor Corp. will make every effort to offer life-time buy (LTB) opportunities and/or offer replacement devices to existing customers for discontinued devices, however, one or both may not be possible for all devices. Please contact your local Central Semiconductor sales representative for LTB opportunities/additional information.