2N2920
2N2920A

SILICON
DUAL NPN TRANSISTORS



TO-78 CASE

Central Semiconductor Corp.

www.centralsemi.com

DESCRIPTION:

The CENTRAL SEMICONDUCTOR 2N2920 and 2N2920A are dual silicon NPN transistors manufactured by the epitaxial planar process utilizing two individual chips mounted in a hermetically sealed metal case designed for differential amplifier applications.

MARKING: FULL PART NUMBER

MAXIMUM RATINGS: (T_A=25°C)	**SYMBOL**		**UNITS**
Collector-Base Voltage	V_{CBO}	60	V
Collector-Emitter Voltage	V_{CEO}	60	V
Emitter-Base Voltage	V_{EBO}	6.0	V
Continuous Collector Current	I_C	30	mA
Power Dissipation (One Die)	P_D	300	mW
Power Dissipation (Both Dice)	P_D	500	mW
Power Dissipation (One Die, T_C=25°C)	P_D	750	mW
Power Dissipation (Both Dice, T_C=25°C)	P_D	1.5	W
Operating and Storage Junction Temperature	T_J, T_{stg}	-65 to +200	°C

ELECTRICAL CHARACTERISTICS PER TRANSISTOR: (T_A=25°C unless otherwise noted)

SYMBOL	**TEST CONDITIONS**	**MIN**	**MAX**	**UNITS**
I_{CBO}	V_{CB}=45V		2.0	nA
I_{CEO}	V_{CE}=5.0V		2.0	nA
I_{EBO}	V_{EB}=5.0V		2.0	nA
BV_{CBO}	I_C=10μA	60		V
BV_{CEO}	I_C=10mA	60		V
BV_{EBO}	I_E=10μA	6.0		V
$V_{CE(SAT)}$	I_C=1.0mA, I_B=100μA		0.35	V
$V_{BE(ON)}$	V_{CE}=5.0V, I_C=100μA		0.70	V
h_{FE}	V_{CE}=5.0V, I_C=10μA	150	600	
h_{FE}	V_{CE}=5.0V, I_C=10μA, T_A=-55°C	40		
h_{FE}	V_{CE}=5.0V, I_C=100μA	225		
h_{FE}	V_{CE}=5.0V, I_C=1.0mA	300		
f_T	V_{CE}=5.0V, I_C=500μA, f=20MHz	60		MHz
C_{ob}	V_{CB}=5.0V, I_E=0, f=140kHz		6.0	pF
NF	V_{CE}=5.0V, I_C=10μA, R_S=10kΩ, f=1.0kHz, BW=200Hz		3.0	dB

R1 (4-April 2014)

2N2920
2N2920A

SILICON
DUAL NPN TRANSISTORS

MATCHING CHARACTERISTICS: (T_A=25°C unless otherwise noted)

		2N2920		2N2920A		
SYMBOL	**TEST CONDITIONS**	**MIN**	**MAX**	**MIN**	**MAX**	**UNITS**
h_{FE1}/h_{FE2}*	V_{CE}=5.0V, I_C=100μA	0.9	1.0	0.9	1.0	
$\lvert V_{BE1}-V_{BE2}\rvert$	V_{CE}=5.0V, I_C=10μA	-	5.0	-	2.0	mV
$\lvert V_{BE1}-V_{BE2}\rvert$	V_{CE}=5.0V, I_C=100μA	-	3.0	-	1.5	mV
$\Delta(V_{BE1}-V_{BE2})$	V_{CE}=5.0V, I_C=100μA, T_A=-55°C to +25°C	-	0.8	-	-	mV
$\Delta(V_{BE1}-V_{BE2})$	V_{CE}=5.0V, I_C=100μA, T_A=+25°C to +125°C	-	1.0	-	-	mV

*The lowest reading is taken as h_{FE1}.

TO-78 CASE - MECHANICAL OUTLINE

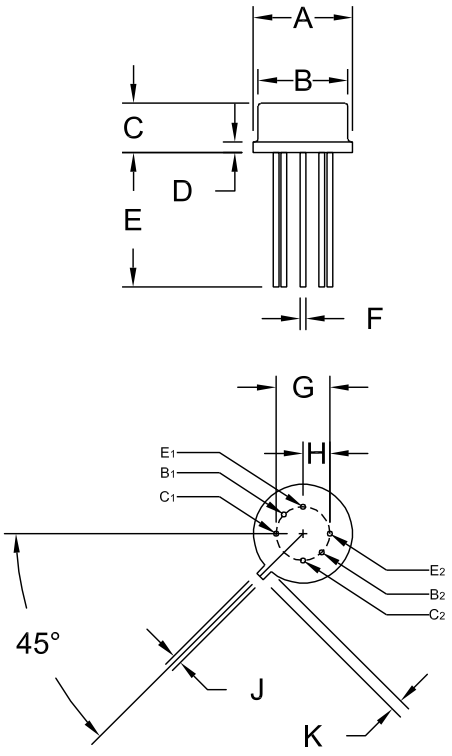

R1

DIMENSIONS				
	INCHES		MILLIMETERS	
SYMBOL	MIN	MAX	MIN	MAX
A (DIA)	0.335	0.370	8.51	9.40
B (DIA)	0.305	0.335	7.75	8.51
C	0.150	0.185	3.81	4.70
D	-	0.040	-	1.02
E	0.500	-	12.70	-
F (DIA)	0.016	0.021	0.41	0.53
G	0.200		5.08	
H	0.100		2.54	
J	0.028	0.034	0.71	0.86
K	0.029	0.045	0.74	1.14

TO-78 (REV: R1)

MARKING: FULL PART NUMBER

R1 (4-April 2014)

2N2920
2N2920A

SILICON
DUAL NPN TRANSISTORS

TYPICAL ELECTRICAL CHARACTERISTICS

DC Current Gain

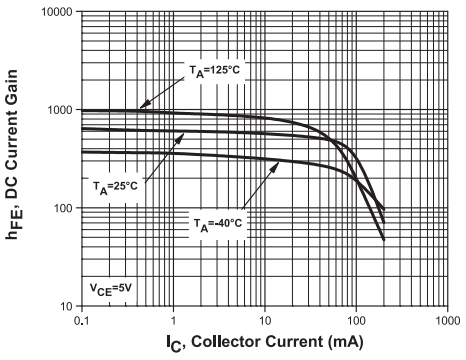

"ON" Voltage

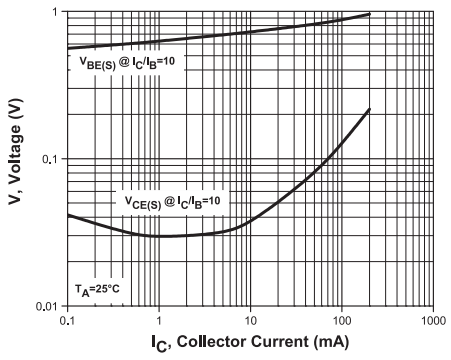

Capacitance

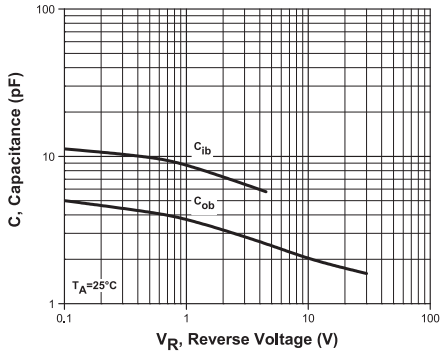

Current Gain-Bandwidth Product

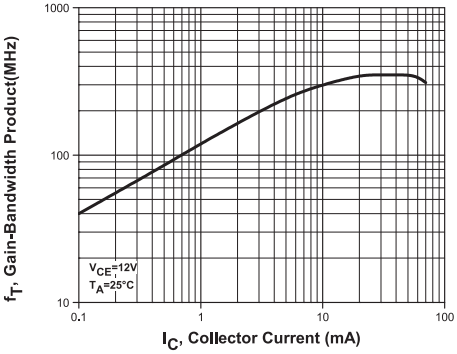

Power Derating

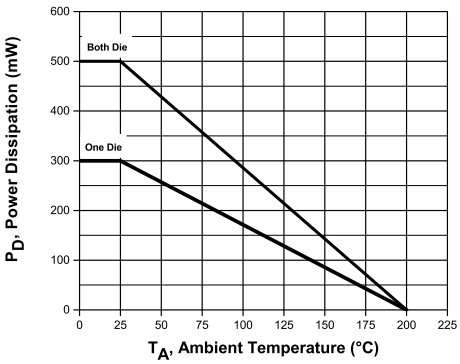

R1 (4-April 2014)

OUTSTANDING SUPPORT AND SUPERIOR SERVICES

PRODUCT SUPPORT

Central's operations team provides the highest level of support to insure product is delivered on-time.

- Supply management (Customer portals)
- Inventory bonding
- Consolidated shipping options
- Custom bar coding for shipments
- Custom product packing

DESIGNER SUPPORT/SERVICES

Central's applications engineering team is ready to discuss your design challenges. Just ask.

- Free quick ship samples (2nd day air)
- Online technical data and parametric search
- SPICE models
- Custom electrical curves
- Environmental regulation compliance
- Customer specific screening
- Up-screening capabilities
- Special wafer diffusions
- PbSn plating options
- Package details
- Application notes
- Application and design sample kits
- Custom product and package development

CONTACT US

Corporate Headquarters & Customer Support Team

Central Semiconductor Corp.
145 Adams Avenue
Hauppauge, NY 11788 USA
Main Tel: (631) 435-1110
Main Fax: (631) 435-1824
Support Team Fax: (631) 435-3388
www.centralsemi.com

Worldwide Field Representatives:
www.centralsemi.com/wwreps

Worldwide Distributors:
www.centralsemi.com/wwdistributors

For the latest version of Central Semiconductor's **LIMITATIONS AND DAMAGES DISCLAIMER**, which is part of Central's Standard Terms and Conditions of sale, visit: www.centralsemi.com/terms

http://www.centralsemi.com

Product End of Life Notification

PDN ID:	PDN01061
Notification Date:	1/17/17
Last Buy Date:	7/17/17
Last Shipment Date	1/17/18

Summary:All transistors manufactured in the TO-78 package are discontinued and now classified as End of Life (EOL).

Although Central Semiconductor Corp. makes every effort to continue to produce devices that have been proclaimed EOL (End of Life) by various manufacturers, it is an accepted industry practice to discontinue certain devices when customer demand falls below a minimum level of sustainability. Accordingly, the following product(s) have been transitioned to End of Life status as part of Central's Product Management Process. Any replacement product will be noted below. The effective date for placing the last purchase order will be six(6) months from the date of this notice and twelve(12) months from the notice date for final shipments; this may be extended if inventory is available.

Central Part Number	Replacement
CEN876	N/A
CEN894	N/A
CEN895	N/A
CEN896	N/A
CEN911	N/A
CEN947	N/A
CEN955 W/DATA	N/A
MD2219A	N/A
MD2369	N/A
MD2369A	N/A
MD2369B	N/A
MD2905	N/A
MD2905A	N/A
MD5179	N/A
MD7000	N/A
MD7001	N/A
MD7003	N/A
MD7003A	N/A
MD7003B	N/A
MD8002	N/A
MD8003	N/A
MD918	N/A
MD918A	N/A
MD918B	N/A
MD984	N/A
2N2060	N/A
2N2060A	N/A
2N2060M	N/A
2N2223	N/A
2N2223A	N/A
2N2453	N/A
2N2453A	N/A
2N2480	N/A
2N2480A	N/A
2N2639	N/A
2N2640	N/A
2N2641	N/A
2N2642	N/A

*** CONTINUED ***

DISCLAIMER: This End of Life (EOL) notification is in accordance with JEDEC standard JESD48 - Product Discontinuance. Central Semiconductor Corp. will make every effort to offer life-time buy (LTB) opportunities and/or offer replacement devices to existing customers for discontinued devices, however, one or both may not be possible for all devices. Please contact your local Central Semiconductor sales representative for LTB opportunities/additional information.

Central Semiconductor Corp.

http://www.centralsemi.com

Product End of Life Notification

PDN ID:	PDN01061
Notification Date:	1/17/17
Last Buy Date:	7/17/17
Last Shipment Date	1/17/18

*** CONTINUED FROM PRIOR PAGE ***

Central Part Number	Replacement
2N2643	N/A
2N2644	N/A
2N2652	N/A
2N2652A	N/A
2N2720	N/A
2N2721	N/A
2N2722	N/A
2N2903	N/A
2N2903A	N/A
2N2913	N/A
2N2914	N/A
2N2915	N/A
2N2915A	N/A
2N2916	N/A
2N2916A	N/A
2N2917	N/A
2N2918	N/A
2N2919	N/A
2N2919A	N/A
2N2920	N/A
2N2920A	N/A
2N3726	N/A
2N3727	N/A
2N3806	N/A
2N3807	N/A
2N3808	N/A
2N3809	N/A
2N3810	N/A
2N3810A	N/A
2N3811	N/A
2N3811A	N/A
2N4015	N/A
2N4016	N/A
2N4854	N/A
2N4937	N/A
2N4938	N/A
2N4939	N/A
2N5793	N/A
2N5794	N/A
2N5796	N/A
2N5912	N/A
2N6502	N/A

*** CONTINUED ***

DISCLAIMER: This End of Life (EOL) notification is in accordance with JEDEC standard JESD48 - Product Discontinuance. Central Semiconductor Corp. will make every effort to offer life-time buy (LTB) opportunities and/or offer replacement devices to existing customers for discontinued devices, however, one or both may not be possible for all devices. Please contact your local Central Semiconductor sales representative for LTB opportunities/additional information.

http://www.centralsemi.com

Product End of Life Notification

PDN ID:	PDN01061
Notification Date:	1/17/17
Last Buy Date:	7/17/17
Last Shipment Date	1/17/18

*** CONTINUED FROM PRIOR PAGE ***

Central Part Number **Replacement**

Central would be happy to assist you by providing additional information or technical data to help locate an alternate source if we have no replacement available. Please email your requests to engineering@centralsemi.com.

DISCLAIMER: This End of Life (EOL) notification is in accordance with JEDEC standard JESD48 - Product Discontinuance. Central Semiconductor Corp. will make every effort to offer life-time buy (LTB) opportunities and/or offer replacement devices to existing customers for discontinued devices, however, one or both may not be possible for all devices. Please contact your local Central Semiconductor sales representative for LTB opportunities/additional information.