2STF2360

Low voltage fast-switching PNP power transistors

Datasheet - production data

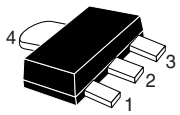

SOT-89

Figure 1. Internal schematic diagram

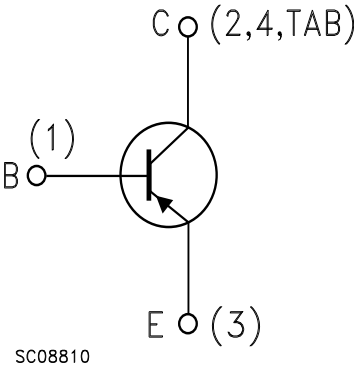

Applications

- Emergency lighting
- LED
- Voltage regulation
- Relay drive

Description

The device is PNP transistor manufactured using new “PB-HDC” (power bipolar high density current) technology. The resulting transistor shows exceptional high gain performances coupled with very low saturation voltage.

Features

- Very low collector-emitter saturation voltage
- High current gain characteristic
- Fast-switching speed

Table 1. Device summary

Order code	Marking	Package	Packaging
2STF2360	2360	SOT-89	Tape and reel

This is information on a product in full production. www.st.com

Contents

1 **Absolute maximum ratings** 3

2 **Electrical characteristics** 4

2.1 Typical characteristics (curves) 5

2.2 Test circuits 6

3 **Package mechanical data** 7

3.1 SOT-89 7

4 **Revision history** 10

1 Absolute maximum ratings

Table 2. Absolute maximum ratings

Symbol	Parameter	Value	Unit
V_{CBO}	Collector-base voltage (I_E = 0)	-60	V
V_{CEO}	Collector-emitter voltage (I_B = 0)	-60	V
V_{EBO}	Emitter-base voltage (I_C = 0)	-6	V
I_C	Collector current	-3	A
I_{CM}	Collector peak current (t_P < 5 ms)	-5	A
I_B	Base current	-0.2	A
I_{BM}	Base peak current (t_P < 5 ms)	-0.4	A
P_{TOT}	Total dissipation at T_{amb} = 25 °C	1.4	W
Tstg	Storage temperature	-65 to 150	°C
TJ	Max. operating junction temperature	150	°C

Table 3. Thermal data

Symbol	Parameter	SOT-89	Unit
R_{thJA} (1)	Thermal resistance junction-ambient Max	89	°C/W

1. Device mounted on a PCB area of 1 cm^2

2 Electrical characteristics

T_{CASE} = 25°C; unless otherwise specified.

Table 4. Electrical characteristics

Symbol	Parameter	Test conditions	Min.	Typ.	Max.	Unit
I_{CBO}	Collector cut-off current (I_E = 0)	V_{CB} = - 60 V			-100	nA
I_{EBO}	Emitter cut-off current (I_C = 0)	V_{EB} = - 6 V			-100	nA
$V_{BE(on)}$	Base-emitter on voltage	V_{CE} = - 2 V I_C = - 100 mA	-630	-650	-730	mV
$V_{CE(sat)}$ (1)	Collector-emitter saturation voltage	I_C = - 2 A I_B = - 100 mA I_C = - 3 A I_B = - 150 mA		-200 -300	-320 -500	mV mV
$V_{BE(sat)}$ (1)	Base-emitter saturation voltage	I_C = - 2 A I_B = -100 mA		-0.9	-1.2	V
h_{FE} (1)	DC current gain	I_C = - 100 mA V_{CE} = - 2 V I_C = - 1 A V_{CE} = - 2 V	200 160		 400	
	Resistive load					
td	Delay time	I_C = - 3 A V_{CC} = - 10 V		10	15	ns
tr	Rise time	$I_{B(on)}$ = - $I_{B(off)}$ = - 300 mA		75	100	ns
ts	Storage time	$V_{BE(off)}$ = 5 V		250	350	ns
tf	Fall time			35	50	ns
f_T	Transition frequency	I_C = - 0.1 A V_{CE} = - 10 V		130		MHz

1. Pulse test: pulse duration ≤ 300 µs, duty cycle ≤ 2 %

2.1 Typical characteristics (curves)

Figure 2. DC current gain (V_{CE} = - 2 V)

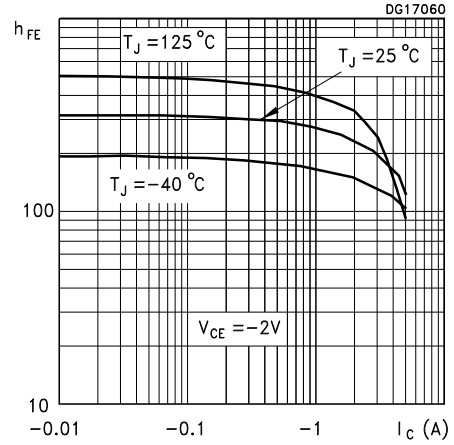

Figure 3. DC current gain (V_{CE} = - 5 V)

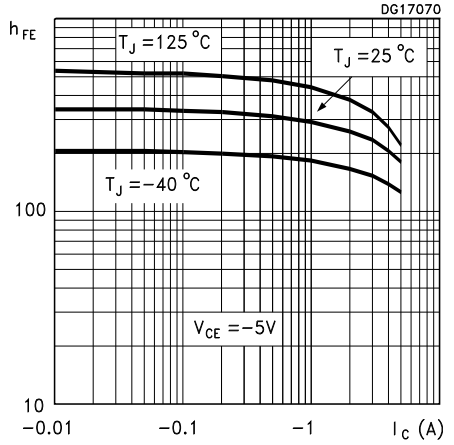

Figure 4. Collector emitter saturation voltage

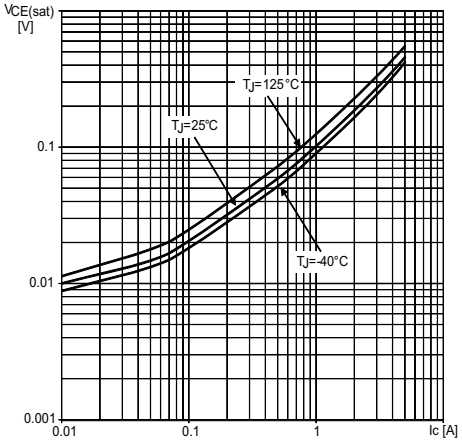

Figure 5. Base emitter saturation voltage

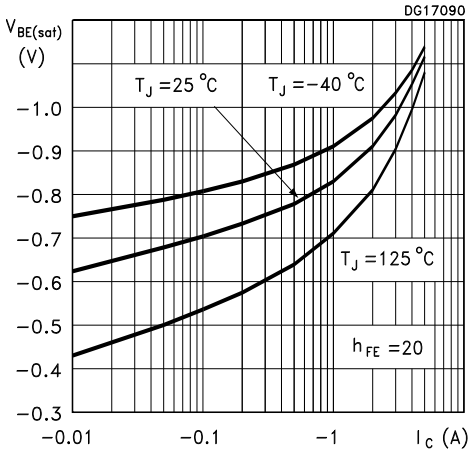

Figure 6. Resistive load switching on

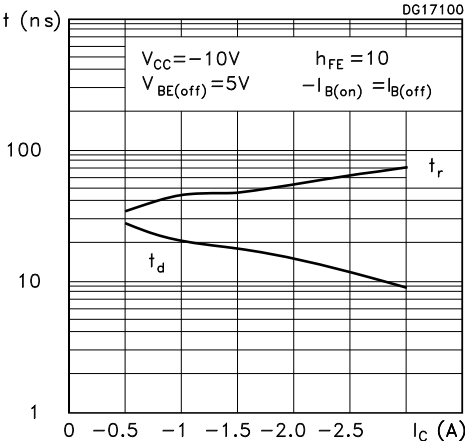

Figure 7. Resistive load switching off

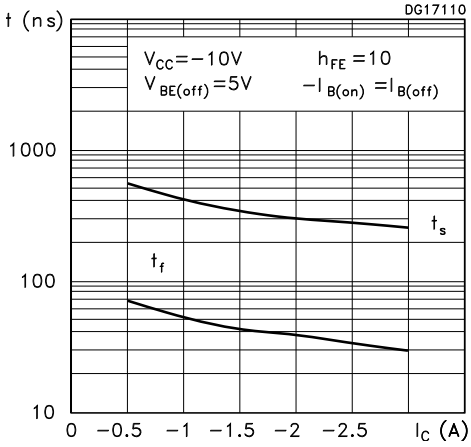

Figure 8. Capacitances

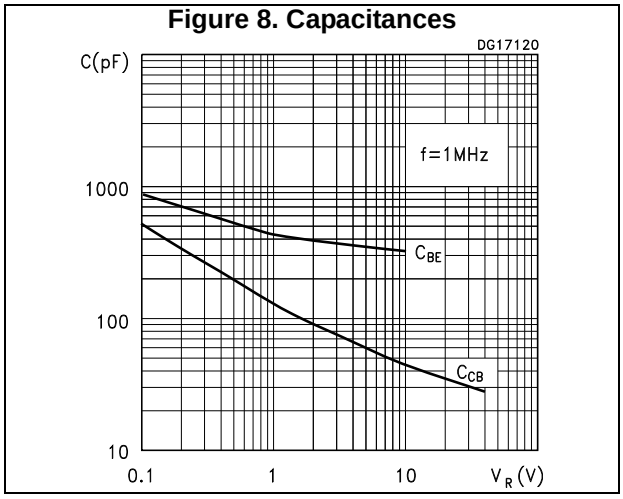

2.2 Test circuits

Figure 9. Resistive load switching

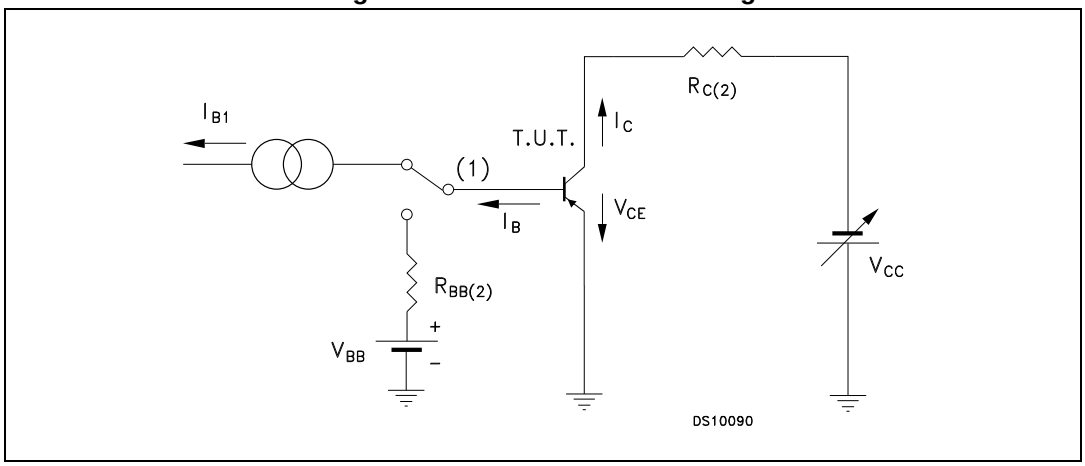

1. Fast electronic switch
2. Non-inductive resistor

3 Package mechanical data

In order to meet environmental requirements, ST offers these devices in different grades of ECOPACK® packages, depending on their level of environmental compliance. ECOPACK® specifications, grade definitions and product status are available at: *www.st.com*. ECOPACK® is an ST trademark.

3.1 SOT-89

Figure 10. SOT-89 package outline

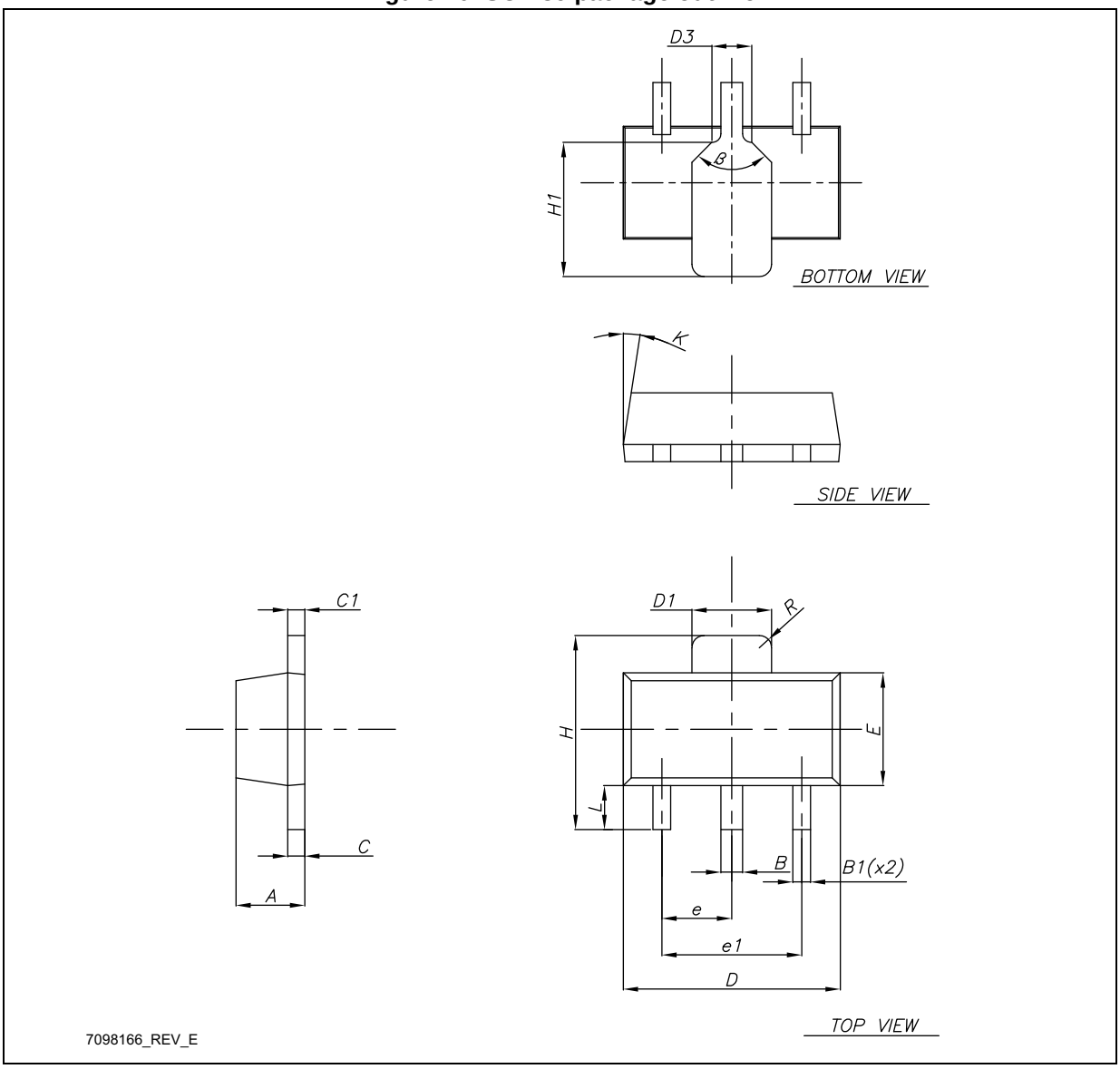

Table 5. SOT-89 mechanical data

Dim.	mm		
	Min.	Typ.	Max.
A	1.40		1.60
B	0.44		0.56
B1	0.36		0.48
C	0.35		0.44
C1	0.35		0.44
D	4.40		4.60
D1	1.62		1.83
D3		0.90	
E	2.29		2.60
e	1.42		1.57
e1	2.92		3.07
H	3.94		4.25
H1	2.70		3.10
K	1°		8°
L	0.89		1.20
R		0.25	
b		90°	

Figure 11. SOT-89 recommended footprint

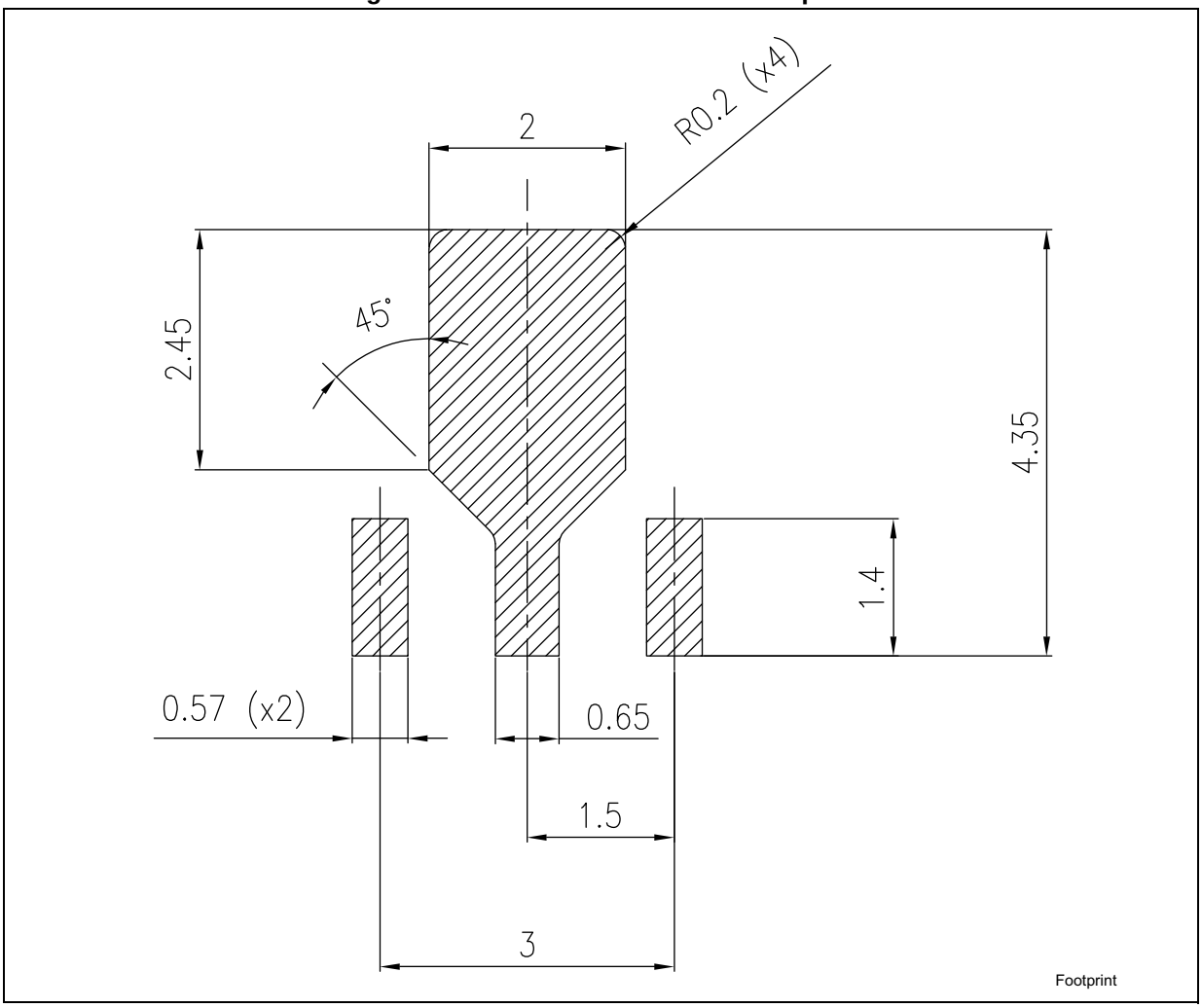

4 Revision history

Table 6. Document revision history

Date	Revision	Changes
13-Sep-2006	1	Initial release
02-Mar-2007	2	New graphics have been added
23-Jan-2009	3	Updated mechanical data
09-Oct-2009	4	Added 2STD2360T4 in TO-252 (DPAK) package
14-Oct-2009	5	Modified *Table 1 on page 1*.
05-Dec-2014	6	Removed SOT-223 and TO-250 (DPAK) packages. Update description in cover page, *Table 1: Device summary*, *Section 1: Absolute maximum ratings*, *Table 4: Electrical characteristics*, *Section 2.1: Typical characteristics (curves)* and *Section 3: Package mechanical data*. Minor text changes.

IMPORTANT NOTICE – PLEASE READ CAREFULLY

STMicroelectronics NV and its subsidiaries (“ST”) reserve the right to make changes, corrections, enhancements, modifications, and improvements to ST products and/or to this document at any time without notice. Purchasers should obtain the latest relevant information on ST products before placing orders. ST products are sold pursuant to ST’s terms and conditions of sale in place at the time of order acknowledgement.

Purchasers are solely responsible for the choice, selection, and use of ST products and ST assumes no liability for application assistance or the design of Purchasers’ products.

No license, express or implied, to any intellectual property right is granted by ST herein.

Resale of ST products with provisions different from the information set forth herein shall void any warranty granted by ST for such product.

ST and the ST logo are trademarks of ST. All other product or service names are the property of their respective owners.

Information in this document supersedes and replaces information previously supplied in any prior versions of this document.

© 2014 STMicroelectronics – All rights reserved