RECTRON SEMICONDUCTOR
TECHNICAL SPECIFICATION

2KMD20S THRU 2KMD60S

SCHOTTKY BARRIER BRIDGE RECTIFIER

VOLTAGE RANGE 20 TO 60 Volts CURRENT 2.0 Ampere

FEATURES

* Low switching noise
* Low forward voltage drop
* High current capability
* High switching capability
* High surge capabitity
* High reliability

MECHANICAL DATA

* Case: Molded plastic
* Epoxy: Device has UL flammability classification 94V-O
* Lead: MIL-STD-202E method 208C guaranteed
* Mounting position: Any



MD-S

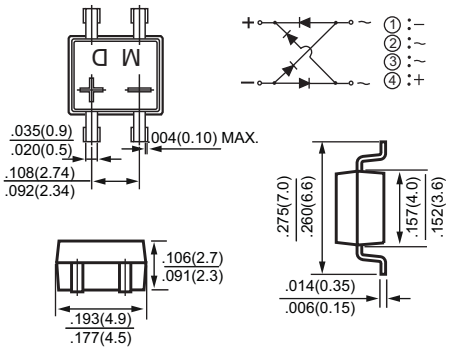

Dimensions in inches and (millimeters)

MAXIMUM RATINGS AND ELECTRICAL CHARACTERISTICS

Ratings at 25 °C ambient temperature unless otherwise specified.

MAXIMUM RATINGS (@ TA=25 °C unless otherwise noted)

RATINGS	SYMBOL	2KMD20S	2KMD30S	2KMD40S	2KMD50S	2KMD60S	UNITS
Maximum Recurrent Peak Reverse Voltage	V_{RRM}	20	30	40	50	60	Volts
Maximum RMS Voltage	V_{RMS}	14	21	28	35	42	Volts
Maximum DC Blocking Voltage	V_{DC}	20	30	40	50	60	Volts
Maximum Average Forward Rectified Current at Derating Lead Temperature	I_O	2.0					Amps
Peak Forward Surge Current 8.3 ms single half sine-wave superimposed on rated load (JEDEC method)	I_{FSM}	60					Amps
Typical Current Squared Time	I^2T	14.94					A^2S
Typical Thermal Resistance (Note 1)	$R_{\theta JA}$	50					°C/W
	$R_{\theta JL}$	15					
Typical Junction Capacitance (Note 3)	C_J	110					pF
Operating Temperature Range	T_J	-55 to + 150					°C
Storage Temperature Range	T_{STG}	-55 to + 150					°C

ELECTRICAL CHARACTERISTICS(@TA=25 °C unless otherwise noted)

CHARACTERISTICS		SYMBOL	2KMD20S	2KMD30S	2KMD40S	2KMD50S	2KMD60S	UNITS
Maximum Instantaneous Forward Voltage at 2.0 A DC		V_F	0.55			0.60		Volts
Maximum Average Reverse Current	@T_A = 25°C	I_R	200					uA
at Rated DC Blocking Voltage	@T_A = 150°C		10					mA

NOTES : 1. Thermal Resistance : At 9.5mm lead lengths, PCB mounted.
2. Measured at 1 MHz and applied reverse voltage of 4.0 volts.
3. "ROHS compliant".

2019-05
REV:C

RATING AND CHARACTERISTICS CURVES (2KMD20S THRU 2KMD60S)

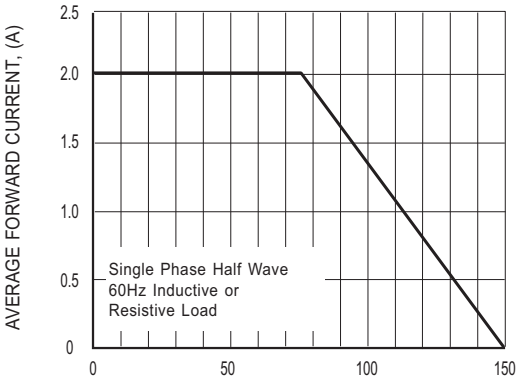

FIG.1 TYPICAL FORWARD CURRENT DERATING CURVE

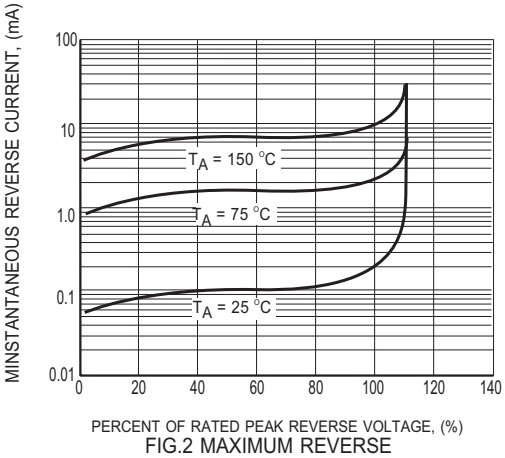

FIG.2 MAXIMUM REVERSE CHARACTERISTICS

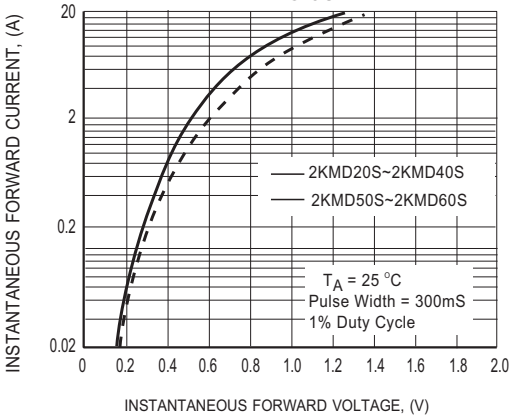

FIG.3 MAXIMUM INSTANTANEOUS FORWARD CHARACTERISTICS

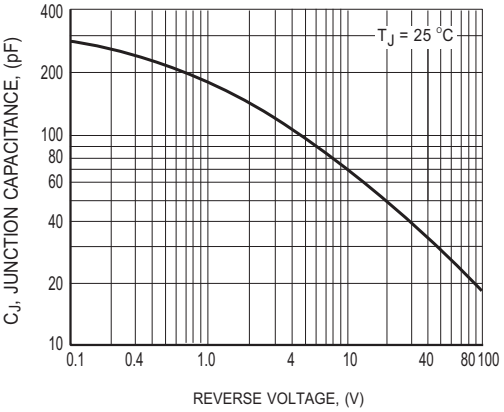

FIG.4 TYPICAL JUNCTION CAPACITANCE

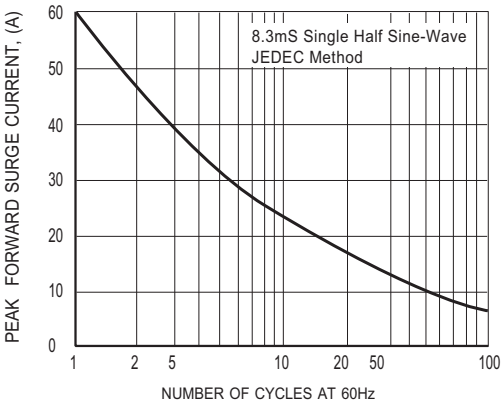

FIG.5 MAXIMUM NON-REPETITIVE FORWARD SURGE CURRENT

Marking Description

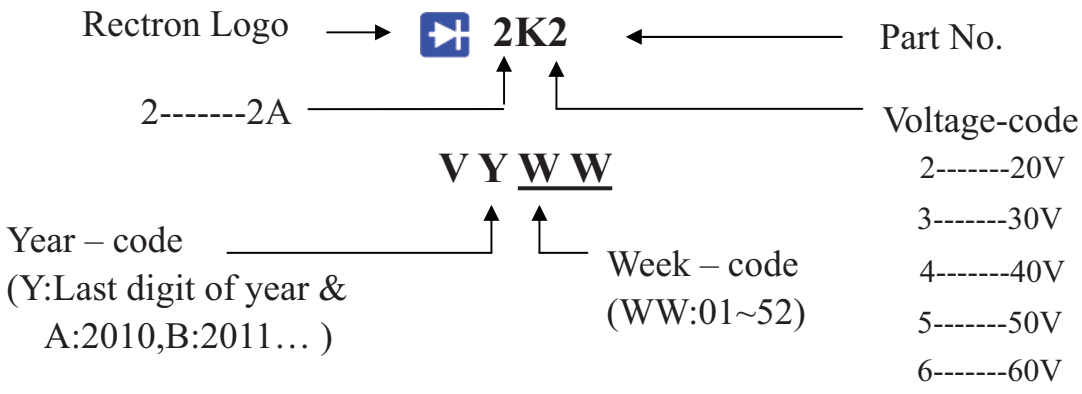

Mounting Pad Layout

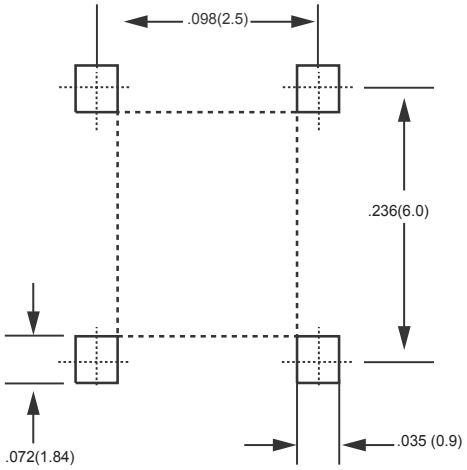

Dimensions in inches and (millimeters)

PACKAGING OF DIODE AND BRIDGE RECTIFIERS

REEL PACK

PACKAGE	PACKING CODE	EA PER REEL	EA PER INNER BOX	COMPONENT SPACE (mm)	TAPE SPACE (mm)	REEL DIA (mm)	CARTON SIZE (mm)	EA PER CARTON	GROSS WEIGHT(Kg)
MD-S	-T	500	2,000	---	---	178	390*205*310	16,000	---
MD-S	-W	3,000	6,000	---	---	330	360*355*360	48,000	15.50

DISCLAIMER NOTICE

Rectron Inc reserves the right to make changes without notice to any product specification herein, to make corrections, modifications, enhancements or other changes. Rectron Inc or anyone on its behalf assumes no responsibility or liability for any errors or inaccuracies. Data sheet specifications and its information contained are intended to provide a product description only. "Typical" parameters which may be included on RECTRON data sheets and/ or specifications can and do vary in different applications and actual performance may vary over time. Rectron Inc does not assume any liability arising out of the application or use of any product or circuit.

Rectron products are not designed, intended or authorized for use in medical, life-saving implant or other applications intended for life-sustaining or other related applications where a failure or malfunction of component or circuitry may directly or indirectly cause injury or threaten a life without expressed written approval of Rectron Inc. Customers using or selling Rectron components for use in such applications do so at their own risk and shall agree to fully indemnify Rectron Inc and its subsidiaries harmless against all claims, damages and expenditures.