molex

# MX64 8 WAY-SEALED RECEPTACLE ASSEMBLY
## BOM AND PIN OUT SHEET

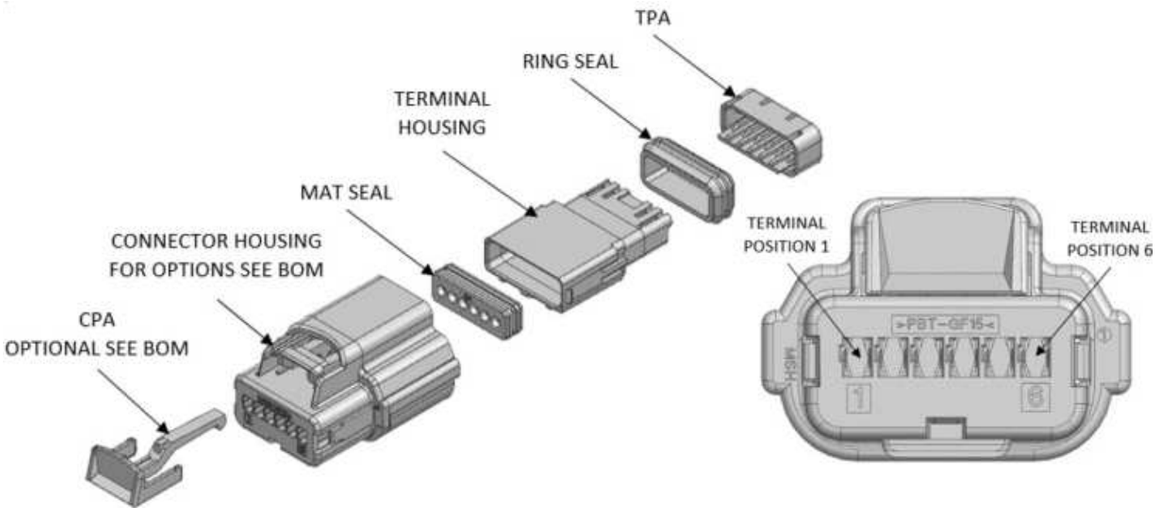


| ABBREVIATION | DESCRIPTION | COLOR | MATERIAL |
|---|---|---|---|
| A-BLACK | HOUSING, KEYING OPTION A | BLACK | PBT GF15 |
| B-BLACK | HOUSING, KEYING OPTION B | BLACK | PBT GF15 |
| C-BLACK | HOUSING, KEYING OPTION C | BLACK | PBT GF15 |
| D-BLACK | HOUSING, KEYING OPTION D | BLACK | PBT GF15 |
| A-GRAY | HOUSING, KEYING OPTION A | GRAY | PBT GF15 |
| B-GRAY | HOUSING, KEYING OPTION B | GRAY | PBT GF15 |
| C-GRAY | HOUSING, KEYING OPTION C | GRAY | PBT GF15 |
| D-GRAY | HOUSING, KEYING OPTION D | GRAY | PBT GF15 |
| TML HSG | TERMINAL HOUSING | BLACK | SPS/PA66 GF30 |
| TPA | TPA | NATURAL | SPS/PA66 GF20 |
| CPA | CPA | RED | PBT GF30 |
| M | MAT SEAL | ROYAL BLUE | INHERENTLY LUBRICATED SILICONE |
| R | RING SEAL | BLUE | INHERENTLY LUBRICATED SILICONE |

FOR ADDITIONAL INFORMATION SEE SD-31402-211

| ASSEMBLY DESCRIPTION | ASSEMBLY PART NUMBER | COMPONENT | | | BLOCKED TERMINALS | | | | | | STATUS | COMMENT |
|---|---|---|---|---|---|---|---|---|---|---|---|---|
| | | THE PRESENCE OF AN ABBREVIATION INDICATES THE PRESENCE OF THAT COMPONENT | | | CAVITY WITH A NUMBER INDICATES BLOCKED TERMINAL POSITION<br>CAVITY WITHOUT A NUMBER INDICATES OPEN TERMINAL POSITION | | | | | | | |
| | | CPA | KEY | COLOR | | | | | | | | |
| MX64 FEM 1X6 MXMETAL WOCPA GRY POLA/6 | 314036001 | NO | A | GRAY | - | - | - | - | - | - | SALEABLE | |
| MX64 FEM 1X6 MXMETAL WOCPA GRY POLC/6 | 314036002 | NO | C | GRAY | - | - | - | - | - | - | SALEABLE | |
| MX64 FEM 1X6 MXMETAL WOCPA GRY POLD/6 | 314036003 | NO | D | GRAY | - | - | - | - | - | - | SALEABLE | |
| MX64 FEM 1X6 MXMETAL W/CPA GRY POLA/6 | 314036004 | YES | A | GRAY | - | - | - | - | - | - | SALEABLE | |
| MX64 FEM 1X6 MXMETAL W/CPA GRY POLC/6 | 314036005 | YES | C | GRAY | - | - | - | - | - | - | SALEABLE | |
| MX64 FEM 1X6 MXMETAL W/CPA GRY POLD/6 | 314036006 | YES | D | GRAY | - | - | - | - | - | - | SALEABLE | |
| MX64 FEM 1X6 MXMETAL WOCPA BLK POLA/6 | 314036100 | NO | A | BLACK | - | - | - | - | - | - | SALEABLE | |
| MX64 FEM 1X6 MXMETAL WOCPA BLK POLA/0 | 314036101 | NO | A | BLACK | 1 | 2 | 3 | 4 | 5 | 6 | SALEABLE | |
| MX64 FEM 1X6 MXMETAL WOCPA BLK POLA/5 | 314036102 | NO | A | BLACK | - | - | 3 | - | - | - | SALEABLE | |
| MX64 FEM 1X6 MXMETAL WOCPA BLK POLA/2 | 314036103 | NO | A | BLACK | 1 | 2 | 3 | - | 5 | - | SALEABLE | |
| MX64 FEM 1X6 MXMETAL WOCPA BLK POLA/4 | 314036104 | NO | A | BLACK | - | - | - | - | 5 | 6 | SALEABLE | |
| MX64 FEM 1X6 MXMETAL WOCPA BLK POLA/3 | 314036105 | NO | A | BLACK | - | - | 3 | - | 5 | 6 | SALEABLE | |
| MX64 FEM 1X6 MXMETAL W/CPA BLK POLA/6 | 314036110 | YES | A | BLACK | - | - | - | - | - | - | SALEABLE | |
| MX64 FEM 1X6 MXMETAL W/CPA BLK POLA/0 | 314036111 | YES | A | BLACK | 1 | 2 | 3 | 4 | 5 | 6 | SALEABLE | |
| MX64 FEM 1X6 MXMETAL W/CPA BLK POLA/5 | 314036112 | YES | A | BLACK | - | - | 3 | - | - | - | SALEABLE | |
| MX64 FEM 1X6 MXMETAL W/CPA BLK POLA/2 | 314036113 | YES | A | BLACK | 1 | 2 | 3 | - | 5 | - | SALEABLE | |
| MX64 FEM 1X6 MXMETAL W/CPA BLK POLA/4 | 314036114 | YES | A | BLACK | - | - | - | - | 5 | 6 | SALEABLE | |

molex

# MX64 8 WAY-SEALED RECEPTACLE ASSEMBLY
## BOM AND PIN OUT SHEET

| ASSEMBLY DESCRIPTION | ASSEMBLY PART NUMBER | COMPONENT | | | BLOCKED TERMINALS | | | | | | STATUS | COMMENT |
|---|---|---|---|---|---|---|---|---|---|---|---|---|
| | | THE PRESENCE OF AN ABBREVIATION INDICATES THE PRESENCE OF THAT COMPONENT | | | CAVITY WITH A NUMBER INDICATES BLOCKED TERMINAL POSITION<br>CAVITY WITHOUT A NUMBER INDICATES OPEN TERMINAL POSITION | | | | | | | |
| | | CPA | KEY | COLOR | | | | | | | | |
| MX64 FEM 1X6 MXMETAL W/CPA BLK POLA/3 | 314036115 | YES | A | BLACK | - | - | 3 | - | 5 | 6 | SALEABLE | |
| MX64 FEM 1X6 MXMETAL WOCPA GRY POLB/6 | 314036200 | NO | B | GRAY | - | - | - | - | - | - | SALEABLE | |
| MX64 FEM 1X6 MXMETAL WOCPA GRY POLB/0 | 314036201 | NO | B | GRAY | 1 | 2 | 3 | 4 | 5 | 6 | SALEABLE | |
| MX64 FEM 1X6 MXMETAL WOCPA GRY POLB/3 | 314036202 | NO | B | GRAY | - | - | - | 4 | 5 | 6 | SALEABLE | |
| MX64 FEM 1X6 MXMETAL W/CPA GRY POLB/6 | 314036210 | YES | B | GRAY | - | - | - | - | - | - | SALEABLE | |
| MX64 FEM 1X6 MXMETAL W/CPA GRY POLB/0 | 314036211 | YES | B | GRAY | 1 | 2 | 3 | 4 | 5 | 6 | SALEABLE | |
| MX64 FEM 1X6 MXMETAL W/CPA GRY POLB/3 | 314036212 | YES | B | GRAY | - | - | - | 4 | 5 | 6 | SALEABLE | |
| MX64 FEM 1X6 MXMETAL WOCPA BLK POLB/6 | 314036500 | NO | B | BLACK | - | - | - | - | - | - | SALEABLE | |
| MX64 FEM 1X6 MXMETAL WOCPA BLK POLB/5 | 314036502 | NO | B | BLACK | - | - | - | 4 | - | - | SALEABLE | |
| MX64 FEM 1X6 MXMETAL W/CPA BLK POLB/6 | 314036510 | YES | B | BLACK | - | - | - | - | - | - | SALEABLE | |
| MX64 FEM 1X6 MXMETAL W/CPA BLK POLB/5 | 314036512 | YES | B | BLACK | - | - | - | 4 | - | - | SALEABLE | |
| MX64 FEM 1X6 MXMETAL WOCPA BLK POLC/6 | 314036600 | NO | C | BLACK | - | - | - | - | - | - | SALEABLE | |
| MX64 FEM 1X6 MXMETAL WOCPA BLK POLC/0 | 314036601 | NO | C | BLACK | 1 | 2 | 3 | 4 | 5 | 6 | SALEABLE | |
| MX64 FEM 1X6 MXMETAL W/CPA BLK POLC/6 | 314036610 | YES | C | BLACK | - | - | - | - | - | - | SALEABLE | |
| MX64 FEM 1X6 MXMETAL W/CPA BLK POLC/0 | 314036611 | YES | C | BLACK | 1 | 2 | 3 | 4 | 5 | 6 | SALEABLE | |
| MX64 FEM 1X6 MXMETAL WOCPA BLK POLD/6 | 314036700 | NO | D | BLACK | - | - | - | - | - | - | SALEABLE | |
| MX64 FEM 1X6 MXMETAL WOCPA BLK POLD/0 | 314036701 | NO | D | BLACK | 1 | 2 | 3 | 4 | 5 | 6 | SALEABLE | |
| MX64 FEM 1X6 MXMETAL W/CPA BLK POLD/6 | 314036710 | YES | D | BLACK | - | - | - | - | - | - | SALEABLE | |
| MX64 FEM 1X6 MXMETAL W/CPA BLK POLD/0 | 314036711 | YES | D | BLACK | 1 | 2 | 3 | 4 | 5 | 6 | SALEABLE | |
| MX64 FEM 1X6 MXMETAL W/CPA BLK POLB/4 | 314036712 | YES | B | BLACK | - | - | - | - | 5 | 6 | SALEABLE | |
| MX64 FEM 1X6 MXMETAL WOCPA BLK POLA/4 | 314036713 | NO | A | BLACK | - | 2 | - | - | 5 | - | SALEABLE | |
| MX64 FEM 1X6 MXMETAL W/CPA BLK POLA/4 | 314036714 | YES | A | BLACK | - | - | 3 | 4 | - | - | SALEABLE | |
| MX64 FEM 1X6 MXMETAL W/CPA BLK POLA/3 | 314036715 | YES | A | BLACK | - | - | - | 4 | 5 | 6 | SALEABLE | |

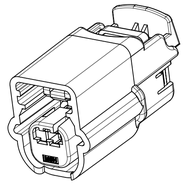

1X2

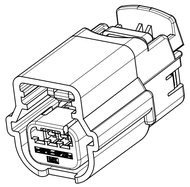

1X3

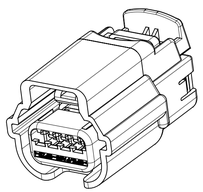

1X4

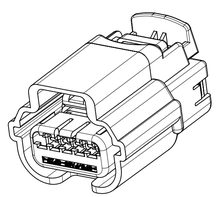

1X5

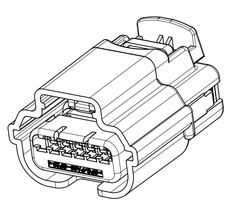

1X6

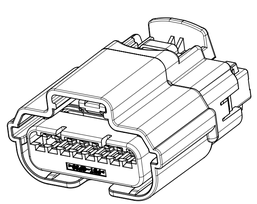

1X8

## TABLE OF CONTENTS



| SHEET NO. | SHEET DESCRIPTION |
|---|---|
| 1 | NOTES AND BOM |
| 2 | CONNECTOR ASSEMBLY WITHOUT CLIPSLOT |
| 3 | CONNECTOR ASSEMBLY WITH CLIPSLOT |
| 4-5 | KEY CONFIGURATIONS |
| 6-9 | BOM |



## DRAWING INFORMATION

| DESCRIPTION | DRAWING NO. |
|---|---|
| PRODUCT SPECIFICATION | PS-31402-000 |
| | FOR 31404 1X8 REFER TO PS-31404-001-1X8 |
| PACKAGING | PK-31300-256 |
| SALES DRAWING | SD-31402-211 |
| | FOR 31404 1X8 REFER TO SD-31404-811 |
| TEST SUMMARY | FOR 1X2 REFER TO TS-31402-001-1X2 |
| | FOR 1X3 REFER TO TS-31402-001-1X3 |
| | FOR 1X6 REFER TO TS-31402-001-1X6 |
| | FOR 31404 1X8 REFER TO TS-31404-001-1X8 |

## MATING INTERFACE DRAWING

| DESCRIPTION | INTERFACE DEFINITION |
|---|---|
| 1X2 | *064-S-002-1-Z02 |
| 1X3 | *064-S-003-1-Z01 |
| 1X4 | *064-S-004-1-Z02 |
| 1X5 | *064-S-005-1-Z02 |
| 1X6 | *064-S-006-1-Z02 |
| 1X8 | *064-S-008-1-Z02 |

NOTES: VALID UNLESS OTHERWISE SPECIFIED

1. GENERAL:

a. APPLICATION SPECIFICATION SEE: AS-31402-000
- -CONTAINS: SEE AS CONTENT
- -DESIGNED TO MATE WITH DEVICE OR CONNECTOR AS SPECIFIED IN THE MATING INTERFACE DRAWINGS CHART.
- *DENOTES DRAWINGS THAT CAN BE ACCESSED AT <http://ewcap.uscarteams.org/>.
- -ASSEMBLY SHIPPED WITH PLR IN PRE-LOCK POSITION (SEE PLR PRE-LOCK VIEW ON SHEET 2 SECTION A-A).

b. PRODUCT RELATED DRAWING REFER TO DRAWING INFORMATION CHART

c. TPA'S MAY BECOME SEATED DURING TRANSIT. IF THIS OCCURS, TPA'S SHOULD BE MOVED TO THE PRE-LOCKED POSITION PRIOR TO FEMALE TERMINAL INSTALLATION. REFERENCE PRODUCT SPECIFICATION: PS-34646-001

d. PARTS MUST BE IN COMPLIANCE TO MOLEX CHEMICAL SUBSTANCES FOR PRODUCTS AND PACKAGING SPECIFICATION: QEHS-699000-301

e. DATA MUST BE SUBMITTED UNDER THE MOLEX PART NUMBER TO IMDS (COMPANY ID#13255)

f. SYSTEM EXCEPT SERIES 31404 1X8 CIRCUIT TO BE USED WITH OUTSIDE WIRE DIAMETERS RANGING FROM 1.20MM TO 2.06MM WITHIN RANGE OF:
- SAE 22 AWG TO 18 AWG PER ESB-M1L123-A2
- ISO 0.35MM$^2$ TO 0.75MM$^2$ PER GMW15626 AND ES-AU5T-1A348-AA

g. POLARIZATION FEATURE EFFECTIVENESS PER USCAR-2 PARAGRAPH 5.4.4 IS REDUCED WHEN TESTING ALL POLARIZATION OPTIONS: 100N MIN.

h. SEE SHEET #3 FOR CONNECTOR ASSEMBLY WITH CLIPSLOP

i. FOR CLIPSSLOT CONNECTOR: CLIP OVERHANGS CONNECTOR, PLEASE CHECK APPLICATION (COULD CAUSE WIRE CHAFING)-SHORTER CLIP IS A RECOMMENDATION.

2. DESIGN - GEOMETRY:

a. THE 3-D CAD DATA IS BASIC (WITHOUT TOLERANCE) AND MASTER FOR THIS PART WITH THE EXCEPTION OF UNDERLINED DIMENSIONS. DIMENSIONAL INFORMATION NOT SHOWN ON THIS DRAWING IS DEFINED BY THE DATA FILE AT ITS LATEST REVISION.

b. GEOMETRIC DIMENSIONS AND TOLERANCES PER ASME Y14.5M-2009

c. EDGES AND UNDIMENSIONED DETAILS PER ISO13715

d. CORNERS SHOWN AS SHARP TO BE R 0.2 MAX.

e. LETTERING SHALL BE 0.15 MAX RAISED IN 0.25 MAX RECESS PAD. THIS INCLUDES RECYCLING CODE, CAVITY ID, VENDOR IDENTIFICATION, AND CUSTOMER MATERIAL NUMBER.

f. VISUAL DEFECTS SHALL MEET COSMETIC STANDARD PS-45499-002 (Class B).

g. DATE CODE: FIRST TWO DIGITS ARE THE CALENDAR YEAR (EXAMPLE: 04 = 2004). THIRD THROUGH 5TH DIGIT DAY # OF THE CALENDAR YEAR (EXAMPLE: FEB. 3RD = '034').

PART NUMBER LEGEND
CONNECTOR ASSEMBLY

3140X-XXXX

SEAL PLUG CONFIGURATION (AS MOLDED)
- 0 - ALL CIRCUITS OPEN
- 1-9 SEE CHART

CPA OPTION
- 0 OR 2 - WITHOUT CPA
- 1 OR 3 - WITH CPA
- 4 - WITHOUT CPA, WITH CLIPSLOT
- 5 - WITH CPA, WITH CLIPSLOT

USCAR POLARIZATION OPTION
- 1 - POLARIZATION OPTION A
- 2 - POLARIZATION OPTION B
- 3 - POLARIZATION OPTION C
- 4 - POLARIZATION OPTION D
- 5 - POLARIZATION OPTION B, BLACK
- 6 - POLARIZATION OPTION C, BLACK
- 7 - POLARIZATION OPTION D, BLACK
- 8 - POLARIZATION OPTION C, NATURAL
- 9 - POLARIZATION OPTION D, GRAY
- 0 - POLARIZATION OPTION D, DARK GRAY

CIRCUIT SIZE 2, 3, 4, 5, 6 & 8
- (T) 6 - CIRCUIT SIZE 6, WITH 31412-6500 OR 31412-6501 RING SEAL (FOR 31402 AND 31403 SERIES) WITH 31412-6500 RING SEAL (FOR 31404 SERIES)
- (T1) 7 - CIRCUIT SIZE 6, WITH 31412-6501 RING SEAL (FOR 31404 SERIES)

TERMINAL OPTION
- (L) 2 - TYCO/MOLEX GET 0.64
- 3 - MOLEX 0.64
- 4 - YAZAKI KAIZEN 0.64/TE GEN Y 0.64/JST AIT 0.64

| REV | REV DESCRIPTION |
|---|---|
| U8 | ADD P/N: 31403-3102 & 31403-3112 |
| U7 | ADD P/N: 31402-6134 to 31402-6124 |
| U6 | ADD P/N: 31402-6001 to 31402-6006<br>31403-6001 to 31403-6006<br>31404-6001 to 31404-6012 |
| U5 | ADD P/N: 31402-6122/6132/6123/6133, 31403-6105/6115/6502/6512 |
| U4 | DELETE P/N 31402-2120/2130 |
| U3 | DELETE OBSOLETE P/NS (31404-6XXX)<br>DELETE P/N WITH GREEN AND BROWN COLOR |
| U2 | ADD P/N: 31404-7126, 31404-7136 |
| U1 | ADD P/N: 31402-3115, 31402-3105 |
| U | OBSOLETE P/N 31404-6XXX |
| T8 | ADD P/N: 31404-7804, 31404-7814 |
| T7 | CHANGE STATUS FROM "TOOLED" TO "SALEABLE"<br>ADD P/N 31404-7135/7125, 31404-7216/7206, 31404-7913/7903 |
| T6 | ADD P/N: 31404-7124, 31404-7134, 31404-7205, 31404-7215, 31404-7803, 31404-7813 |
| T5 | ADD P/N: 31404-7123; 31404-7133; 31404-7902; 31404-7912 |
| T4 | ADD P/N:31402-2120,31402-2130,31402-3104,31402-3114,31402-6201,31402-6211, 31402-6301,31402-6311,31402-6401,31402-6411,31402-6501,31402-6511, 31402-6601,31402-6611,31402-6701,31402-6711,31403-6201,31403-6211, 31403-6301,31403-6311,31403-6401,31403-6411,31403-6501,31403-6511, 31403-6601,31403-6611,31403-6701,31403-6711,31404-6201,31404-6211 |
| T2 | UPDATE BOM INFORMATION ON SHEET 9 |
| T1 | DELETE 31402/31403-7*** P/N |
| T | ADD P/N 3140*-7XXXX FOR 1X6 WITH 31412-6501 RING SEAL VERSION ON SHEET 9 |
| S | ADD P/N: 31402-6131; 31402-6121 |
| R | ADD P/N: 31404-3112; 31404-3102 |
| P | ADD P/N: 31403-3132; 31403-3122 |
| M | ADD P/N: 31402-6118; 31402-6108 |

THIS DRAWING CONTAINS INFORMATION THAT IS PROPRIETARY TO MOLEX ELECTRONIC TECHNOLOGIES, LLC AND SHOULD NOT BE USED WITHOUT WRITTEN PERMISSION

FUNCTIONAL SYMBOLS: FA = 0, FC = 0, FP = 0

DIVISIONAL SYMBOLS

| DIMENSION UNITS | SCALE |
|---|---|
| MM | 1:1 |

GENERAL TOLERANCES (UNLESS SPECIFIED)

| | | |
|---|---|---|
| ANGULAR TOL | ± | 3 ° |
| 4 PLACES | ± | 0 |
| 3 PLACES | ± | 0 |
| 2 PLACES | ± | 0.13 |
| 1 PLACE | ± | 0.3 |
| 0 PLACES | ± | 0 |

DRAFT WHERE APPLICABLE MUST REMAIN WITHIN DIMENSIONS

CURRENT REV DESC: MX64 - 1x3 CVP PNs added

| | | |
|---|---|---|
| EC NO: | CO-000021437 | |
| DRWN: | Mario Gazca | 07-Oct-2024 |
| CHK'D: | MAURICIO RUIZ | 27-Feb-2025 |
| APPR: | Brittney Cotter | 12-Mar-2025 |
| INITIAL REVISION: | | |
| DRWN: | RFC_PLMIMP | 01-Mar-2004 |
| APPR: | PBERG | 30-Sep-2004 |

molex

0.64 USCAR CONNECTOR
SEALED SINGLE ROW ASSEMBLY

PRODUCT CUSTOMER DRAWING

| THIRD ANGLE PROJECTION | DRAWING | SERIES |
|---|---|---|
| | D-SIZE | 31402 |

| DOCUMENT NUMBER | DOC TYPE | DOC PART | REVISION |
|---|---|---|---|
| SD-31402-211 | PSD | 001 | U8 |

| MATERIAL NUMBER | CUSTOMER | SHEET NUMBER |
|---|---|---|
| | GENERAL MARKET | 1 OF 8 |

| DOCUMENT STATUS | Production | RELEASE DATE | 12-Mar-2025 02:34:41 |
|---|---|---|---|

TEMPLATE: mx64sdsmall
REVISION: J
DATE: 2006/01/10

# CONNECTOR ASSEMBLY WITHOUT CLIPSLOT

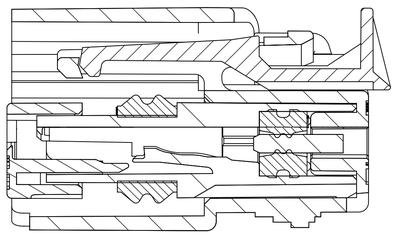

SECTION A-A

TPA SHOWN IN AS-SHIPPED
PRE-LOCKED POSITION
SEE NOTE 1c

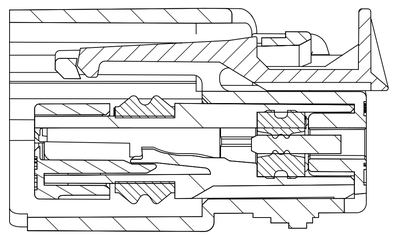

SECTION A-A

TPA SHOWN IN FINAL
LOCKED POSITION

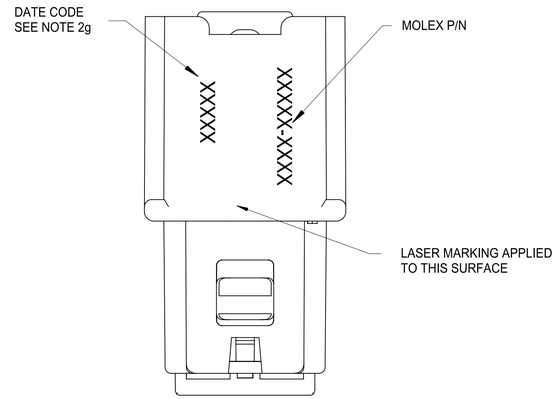


BOTTOM VIEW

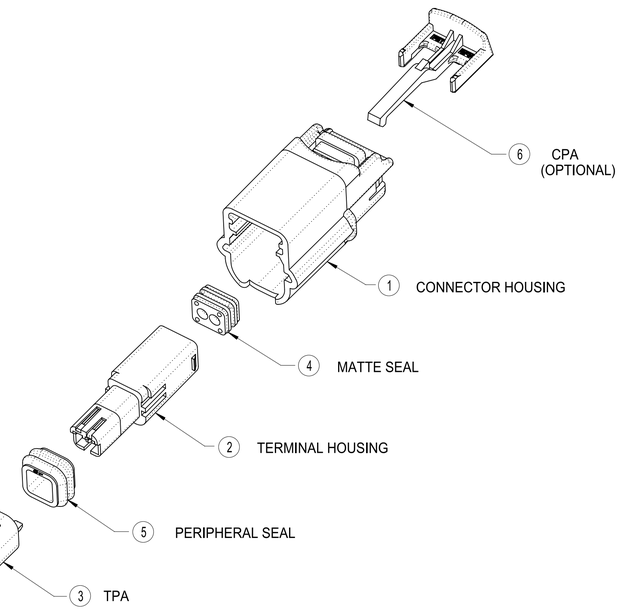


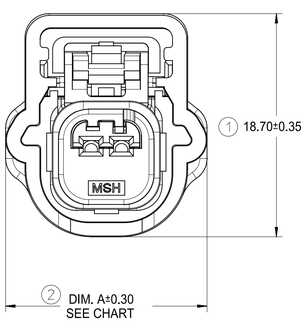


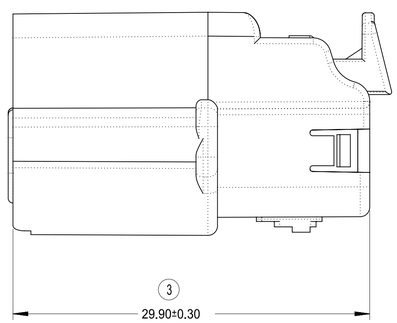


RIGHT SIDE VIEW

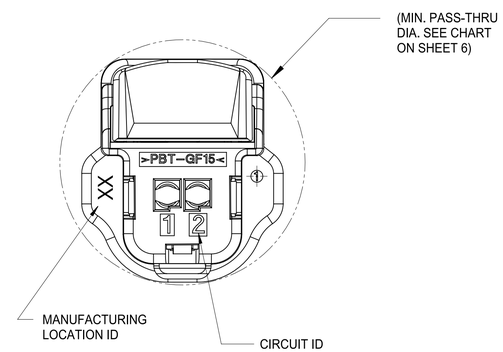


BACK VIEW

| ITEM | DESCRIPTION | COLOR | MATERIAL |
|---|---|---|---|
| 1 | CONNECTOR HOUSING | SEE CHART | PBT GF15 |
| 2 | TERMINAL HOUSING | BLACK | SPS/PA66 GF30 |
| 3 | TPA | NATURAL | SPS/PA66 GF20 |
| 4 | MATTE SEAL | SEE CHART | SILICONE RUBBER |
| 5 | PERIPHERAL SEAL | SEE CHART | SILICONE RUBBER |
| 6 | CPA - OPTIONAL | RED | PBT GF30 |

THIS DRAWING CONTAINS INFORMATION THAT IS PROPRIETARY TO MOLEX ELECTRONIC TECHNOLOGIES, LLC AND SHOULD NOT BE USED WITHOUT WRITTEN PERMISSION

FUNCTIONAL SYMBOLS
FA = 0
FC = 0
FP = 0
DIVISIONAL SYMBOLS

| DIMENSION UNITS | SCALE |
|---|---|
| MM | 1:1 |

GENERAL TOLERANCES (UNLESS SPECIFIED)

| | | |
|---|---|---|
| ANGULAR TOL | ± | 3 ° |
| 4 PLACES | ± | 0 |
| 3 PLACES | ± | 0 |
| 2 PLACES | ± | 0.13 |
| 1 PLACE | ± | 0.3 |
| 0 PLACES | ± | 0 |

DRAFT WHERE APPLICABLE MUST REMAIN WITHIN DIMENSIONS

CURRENT REV DESC: MX64 - 1x3 CVP PNs added

EC NO: CO-000021437
DRWN: Mario Gazca 07-Oct-2024
CHK'D: MAURICIO RUIZ 27-Feb-2025
APPR: Brittney Cotter 12-Mar-2025

INITIAL REVISION:
DRWN: RFC_PLMIMP 01-Mar-2004
APPR: PBERG 30-Sep-2004

molex

0.64 USCAR CONNECTOR
SEALED SINGLE ROW ASSEMBLY

PRODUCT CUSTOMER DRAWING

| DOCUMENT NUMBER | DOC TYPE | DOC PART | REVISION |
|---|---|---|---|
| SD-31402-211 | PSD | 001 | U8 |

| THIRD ANGLE PROJECTION | DRAWING | SERIES | MATERIAL NUMBER | CUSTOMER | SHEET NUMBER |
|---|---|---|---|---|---|
| | D-SIZE | 31402 | | GENERAL MARKET | 2 OF 8 |

| DOCUMENT STATUS | Production | RELEASE DATE | 12-Mar-2025 02:34:41 |
|---|---|---|---|

# CONNECTOR ASSEMBLY WITH CLIPSLOT

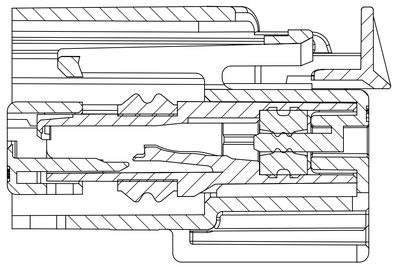

SECTION C-C

TPA SHOWN IN AS-SHIPPED
PRE-LOCKED POSITION
SEE NOTE 1c

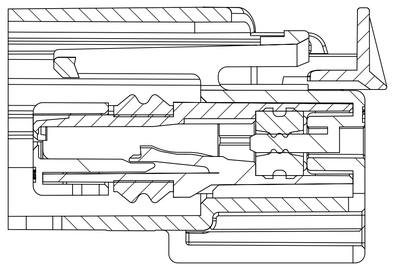

SECTION C-C

TPA SHOWN IN FINAL
LOCKED POSITION

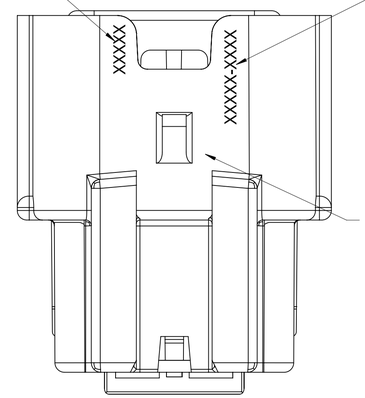


BOTTOM VIEW

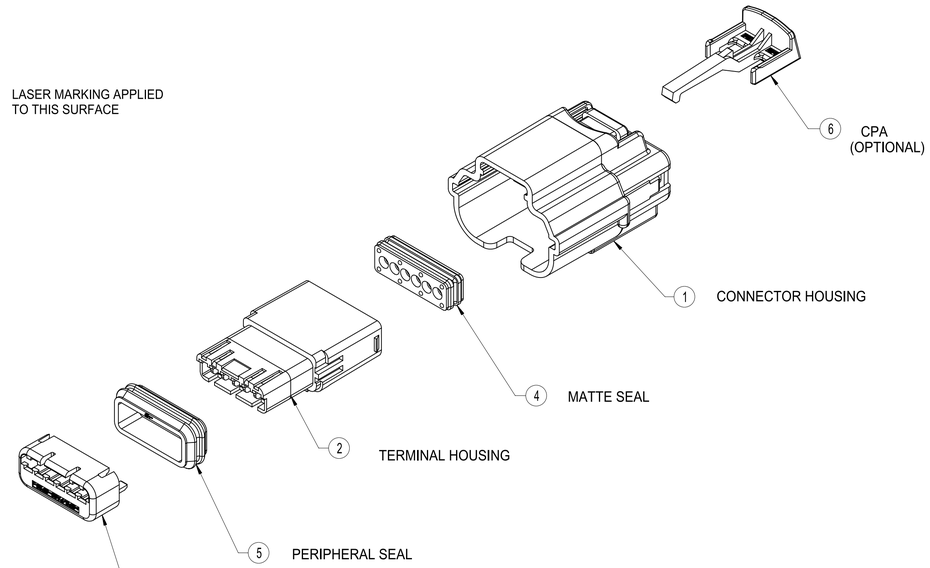


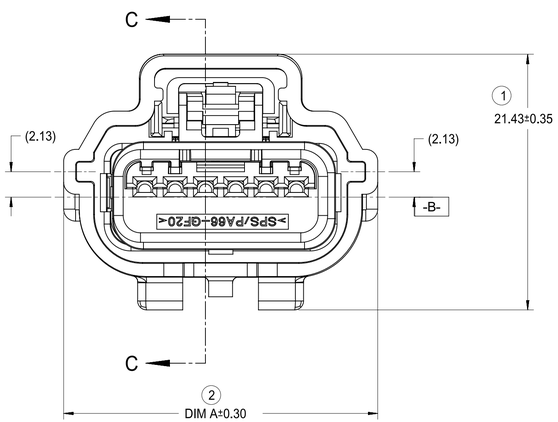


FRONT VIEW

POLARIZATION A

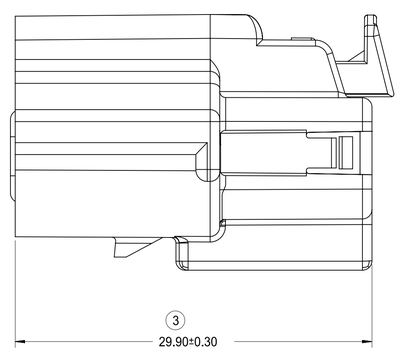


RIGHT SIDE VIEW

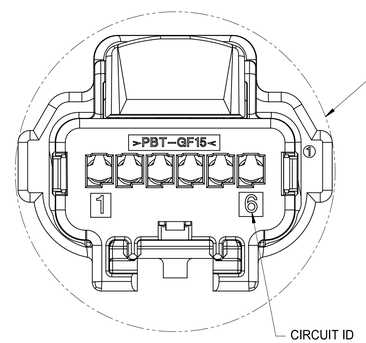


BACK VIEW

| ITEM | DESCRIPTION | COLOR | MATERIAL |
|---|---|---|---|
| 1 | CONNECTOR HOUSING | SEE CHART | PBT GF15 |
| 2 | TERMINAL HOUSING | BLACK | SPS/PA66 GF30 |
| 3 | TPA | NATURAL | SPS/PA66 GF20 |
| 4 | MATTE SEAL | SEE CHART | SILICONE RUBBER |
| 5 | PERIPHERAL SEAL | SEE CHART | SILICONE RUBBER |
| 6 | CPA - OPTIONAL | RED | PBT GF30 |

FUNCTIONAL SYMBOLS
FA = 0
FC = 0
FP = 0
DIVISIONAL SYMBOLS

THIS DRAWING CONTAINS INFORMATION THAT IS PROPRIETARY TO MOLEX ELECTRONIC TECHNOLOGIES, LLC AND SHOULD NOT BE USED WITHOUT WRITTEN PERMISSION

| DIMENSION UNITS | SCALE |
|---|---|
| MM | 1:1 |

GENERAL TOLERANCES (UNLESS SPECIFIED)

| | | |
|---|---|---|
| ANGULAR TOL | ± | 3 ° |
| 4 PLACES | ± | 0 |
| 3 PLACES | ± | 0 |
| 2 PLACES | ± | 0.13 |
| 1 PLACE | ± | 0.3 |
| 0 PLACES | ± | 0 |

DRAFT WHERE APPLICABLE MUST REMAIN WITHIN DIMENSIONS

CURRENT REV DESC: MX64 - 1x3 CVP PNs added

EC NO: CO-000021437
DRWN: Mario Gazca 07-Oct-2024
CHK'D: MAURICIO RUIZ 27-Feb-2025
APPR: Brittney Cotter 12-Mar-2025

INITIAL REVISION:
DRWN: RFC_PLMIMP 01-Mar-2004
APPR: PBERG 30-Sep-2004

THIRD ANGLE PROJECTION | DRAWING: D-SIZE | SERIES: 31402

molex

0.64 USCAR CONNECTOR
SEALED SINGLE ROW ASSEMBLY

PRODUCT CUSTOMER DRAWING

| DOCUMENT NUMBER | DOC TYPE | DOC PART | REVISION |
|---|---|---|---|
| SD-31402-211 | PSD | 001 | U8 |

MATERIAL NUMBER | CUSTOMER: GENERAL MARKET | SHEET NUMBER: 3 OF 8

DOCUMENT STATUS | Production | RELEASE DATE | 12-Mar-2025 02:34:41

FORMAT: master-duoend2
REVISION: J
DATE: 2006/01/16

## 1X2

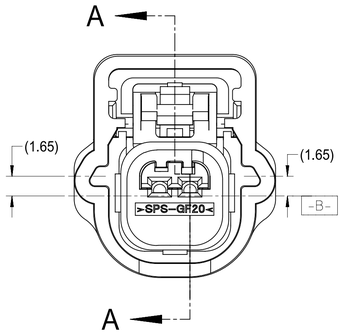


FRONT VIEW
POLARIZATION A

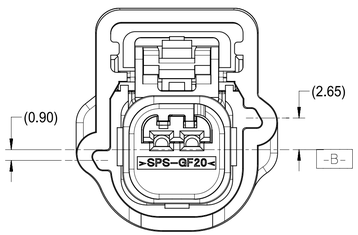


POLARIZATION B

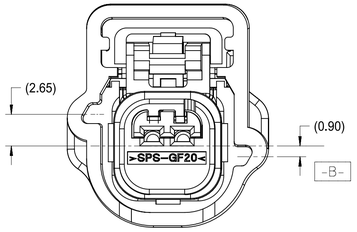


POLARIZATION C

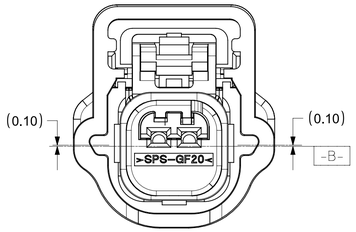


POLARIZATION D

## 1X3

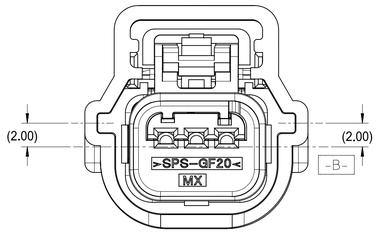


POLARIZATION A

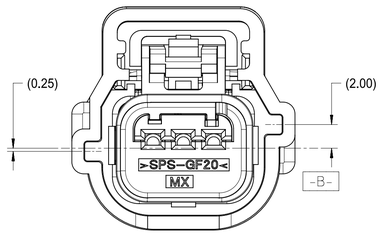


POLARIZATION B

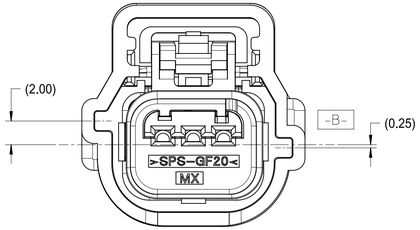


POLARIZATION C

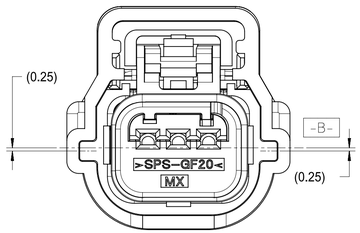


POLARIZATION D

## 1X4

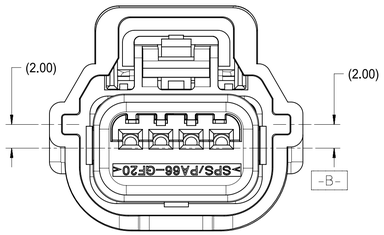


POLARIZATION A

# KEY CONFIGURATIONS

| DOCUMENT STATUS | Production | RELEASE DATE | 12-Mar-2025 02:34:41 |
|---|---|---|---|

| FUNCTIONAL SYMBOLS | | |
|---|---|---|
| FA | = | 0 |
| FC | = | 0 |
| FP | = | 0 |
| DIVISIONAL SYMBOLS | | |

THIS DRAWING CONTAINS INFORMATION THAT IS PROPRIETARY TO MOLEX ELECTRONIC TECHNOLOGIES, LLC AND SHOULD NOT BE USED WITHOUT WRITTEN PERMISSION

| DIMENSION UNITS | SCALE |
|---|---|
| MM | 1:1 |

| GENERAL TOLERANCES (UNLESS SPECIFIED) | | |
|---|---|---|
| ANGULAR TOL | ± | 3 ° |
| 4 PLACES | ± | 0 |
| 3 PLACES | ± | 0 |
| 2 PLACES | ± | 0.13 |
| 1 PLACE | ± | 0.3 |
| 0 PLACES | ± | 0 |

DRAFT WHERE APPLICABLE MUST REMAIN WITHIN DIMENSIONS

CURRENT REV DESC: MX64 - 1x3 CVP PNs added

| | | |
|---|---|---|
| EC NO: | CO-000021437 | |
| DRWN: | Mario Gazca | 07-Oct-2024 |
| CHK'D: | MAURICIO RUIZ | 27-Feb-2025 |
| APPR: | Brittney Cotter | 12-Mar-2025 |
| INITIAL REVISION: | | |
| DRWN: | RFC_PLMIMP | 01-Mar-2004 |
| APPR: | PBERG | 30-Sep-2004 |

THIRD ANGLE PROJECTION | DRAWING: D-SIZE | SERIES: 31402

molex

0.64 USCAR CONNECTOR
SEALED SINGLE ROW ASSEMBLY

PRODUCT CUSTOMER DRAWING

| DOCUMENT NUMBER | DOC TYPE | DOC PART | REVISION |
|---|---|---|---|
| SD-31402-211 | PSD | 001 | U8 |

| MATERIAL NUMBER | CUSTOMER | SHEET NUMBER |
|---|---|---|
| | GENERAL MARKET | 4 OF 8 |

## 1X5

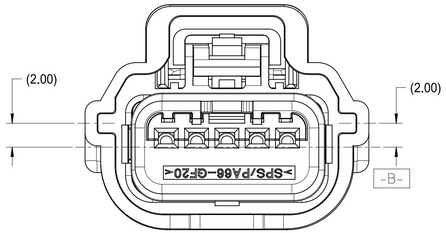


POLARIZATION A

## 1X6

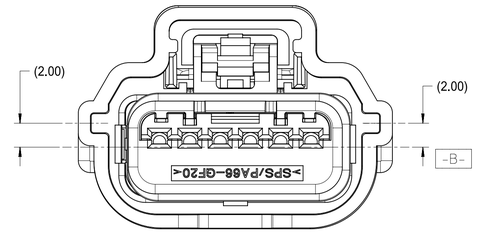


POLARIZATION A

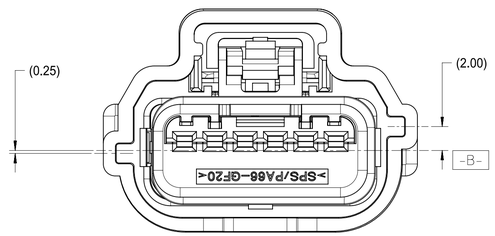


POLARIZATION B

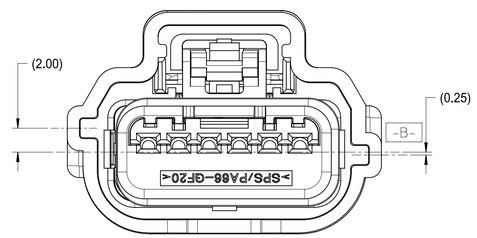


POLARIZATION C

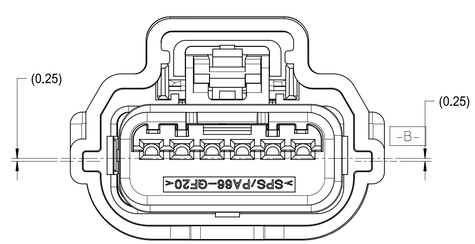


POLARIZATION D

## 1X8

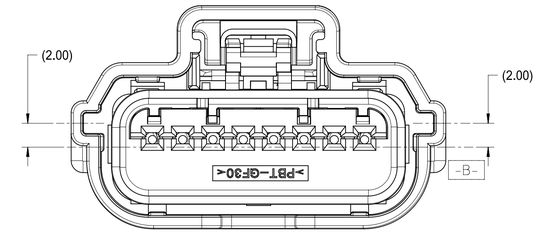


POLARIZATION A

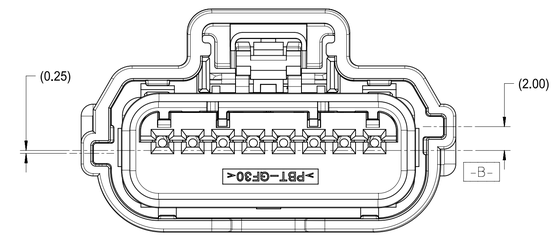


POLARIZATION B

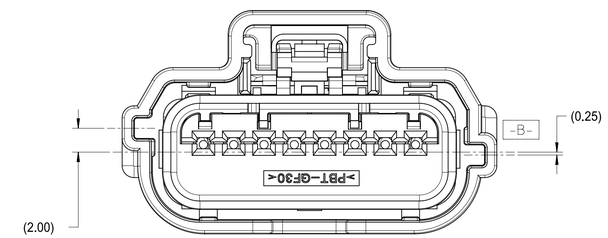


POLARIZATION C

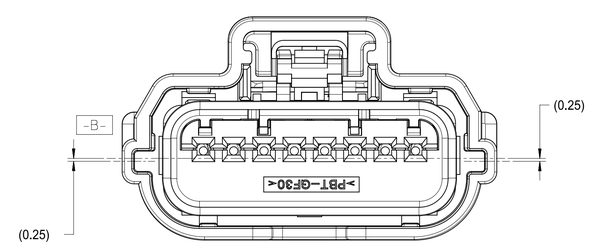


POLARIZATION D

# KEY CONFIGURATIONS

| DOCUMENT STATUS | Production | RELEASE DATE | 12-Mar-2025 02:34:41 |
|---|---|---|---|

FUNCTIONAL SYMBOLS
FA = 0
FC = 0
FP = 0
DIVISIONAL SYMBOLS

THIS DRAWING CONTAINS INFORMATION THAT IS PROPRIETARY TO MOLEX ELECTRONIC TECHNOLOGIES, LLC AND SHOULD NOT BE USED WITHOUT WRITTEN PERMISSION

| DIMENSION UNITS | SCALE |
|---|---|
| MM | 1:1 |

GENERAL TOLERANCES (UNLESS SPECIFIED)

| | | |
|---|---|---|
| ANGULAR TOL | ± | 3 ° |
| 4 PLACES | ± | 0 |
| 3 PLACES | ± | 0 |
| 2 PLACES | ± | 0.13 |
| 1 PLACE | ± | 0.3 |
| 0 PLACES | ± | 0 |

DRAFT WHERE APPLICABLE MUST REMAIN WITHIN DIMENSIONS

CURRENT REV DESC: MX64 - 1x3 CVP PNs added

| | | |
|---|---|---|
| EC NO: | CO-000021437 | |
| DRWN: | Mario Gazca | 07-Oct-2024 |
| CHK'D: | MAURICIO RUIZ | 27-Feb-2025 |
| APPR: | Brittney Cotter | 12-Mar-2025 |

INITIAL REVISION:

| | | |
|---|---|---|
| DRWN: | RFC_PLMIMP | 01-Mar-2004 |
| APPR: | PBERG | 30-Sep-2004 |

THIRD ANGLE PROJECTION | DRAWING: D-SIZE | SERIES: 31402

molex

0.64 USCAR CONNECTOR
SEALED SINGLE ROW ASSEMBLY

PRODUCT CUSTOMER DRAWING

| DOCUMENT NUMBER | DOC TYPE | DOC PART | REVISION |
|---|---|---|---|
| SD-31402-211 | PSD | 001 | U8 |

MATERIAL NUMBER | CUSTOMER: GENERAL MARKET | SHEET NUMBER: 5 OF 8

FORMAT: molex-dual-D
REVISION: J
DATE: 2006/11/16

| PART NUMBER WITHOUT CPA | PART NUMBER WITH CPA | CLIPSLOT OPTION | ROW/ CIRCUITS | KEY* | MATTE SEAL COLOR | PERIMETER SEAL COLOR | CONNECTOR COLOR | WIDTH DIM (A) | MIN. PASS THRU DIA. | FEMALE TERMINAL SUPPLIER | USCAR FOOTPRINT DRAWING NO. | STATUS | |
|---|---|---|---|---|---|---|---|---|---|---|---|---|---|
| 31402-2100 | 31402-2110 | NO | 1 X 2 | A | ROYAL BLUE | BLUE | BLACK | 16.88 | (20.80) | TYCO OR MOLEX GET 0.64 | 064-S-002-1-Z02 | SALEABLE | |
| 31402-2200 | 31402-2210 | | | B | | | GRAY | | | | | SALEABLE | |
| 31402-2500 | 31402-2510 | | | B | | | BLACK | | | | | SALEABLE | |
| 31402-2600 | 31402-2610 | | | C | | | BLACK | | | | | SALEABLE | |
| 31402-2700 | 31402-2710 | | | D | | | BLACK | | | | | SALEABLE | |
| 31403-2000 | 31403-2010 | | | D | | | DK. GRAY | | | MOLEX 0.64 | | SALEABLE | L |
| 31403-2100 | 31403-2110 | | | A | | | BLACK | | | | | SALEABLE | |
| 31403-2200 | 31403-2210 | | | B | | | GRAY | | | | | SALEABLE | |
| 31403-2500 | 31403-2510 | | | B | | | BLACK | | | | | SALEABLE | L |
| 31403-2600 | 31403-2610 | | | C | | | BLACK | | | | | SALEABLE | |
| 31403-2700 | 31403-2710 | | | D | | | BLACK | | | | | SALEABLE | |
| 31403-2800 | 31403-2810 | | | C | | | NATURAL | | | | | SALEABLE | L |
| 31403-2900 | 31403-2910 | | | D | | | GRAY | | | | | SALEABLE | |
| 31404-2100 | 31404-2110 | | | A | | | BLACK | | | YAZAKI KAIZEN 0.64 TE GEN Y 0.64 JST AIT 0.64 | | NOT TOOLED | |
| 31404-2200 | 31404-2210 | | | B | | | GRAY | | | | | NOT TOOLED | |
| 31404-2300 | 31404-2310 | | | C | | | BROWN | | | | | NOT TOOLED | |
| 31404-2400 | 31404-2410 | | | D | | | GREEN | | | | | NOT TOOLED | |
| 31404-2500 | 31404-2510 | | | B | | | BLACK | | | | | NOT TOOLED | |
| 31404-2600 | 31404-2610 | | | C | | | BLACK | | | | | NOT TOOLED | |
| 31404-2700 | 31404-2710 | | | D | | | BLACK | | | | | NOT TOOLED | |
| 31402-3100 | 31402-3110 | NO | 1 X 3 | A | LIGHT BLUE | RUST RED | BLACK | 18.70 | (22.00) | TYCO OR MOLEX GET 0.64 | 064-S-003-1-Z01 | SALEABLE | |
| 31402-3200 | 31402-3210 | | | B | | | GRAY | | | | | SALEABLE | |
| 31402-3500 | 31402-3510 | | | B | | | BLACK | | | | | SALEABLE | |
| 31402-3600 | 31402-3610 | | | C | | | BLACK | | | | | SALEABLE | |
| 31402-3700 | 31402-3710 | | | D | | | BLACK | | | | | SALEABLE | |
| 31403-3000 | 31403-3010 | | | D | | | DK. GRAY | | | MOLEX 0.64 | | SALEABLE | L |
| 31403-3100 | 31403-3110 | | | A | | | BLACK | | | | | SALEABLE | |
| 31403-3200 | 31403-3210 | | | B | | | GRAY | | | | | SALEABLE | |
| 31403-3500 | 31403-3510 | | | B | | | BLACK | | | | | SALEABLE | |
| 31403-3600 | 31403-3610 | | | C | | | BLACK | | | | | SALEABLE | |
| 31403-3700 | 31403-3710 | | | D | | | BLACK | | | | | SALEABLE | |
| 31403-3800 | 31403-3810 | | | C | | | NATURAL | | | | | SALEABLE | L |
| 31404-3100 | 31404-3110 | | | A | | | BLACK | | | YAZAKI KAIZEN 0.64 TE GEN Y 0.64 JST AIT 0.64 | | SALEABLE | |
| 31404-3200 | 31404-3210 | | | B | | | GRAY | | | | | SALEABLE | |
| 31404-3500 | 31404-3510 | | | B | | | BLACK | | | | | SALEABLE | |
| 31404-3600 | 31404-3610 | | | C | | | BLACK | | | | | SALEABLE | |
| 31404-3700 | 31404-3710 | | | D | | | BLACK | | | | | SALEABLE | |
| 31402-4100 | 31402-4110 | NO | 1 X 4 | A | TBD | TBD | BLACK | 21.25 | (22.34) | TYCO OR MOLEX GET 0.64 | 064-S-004-1-Z02 | NOT TOOLED | |
| 31402-4200 | 31402-4210 | | | B | | | GRAY | | | | | NOT TOOLED | |
| 31402-4300 | 31402-4310 | | | C | | | BROWN | | | | | NOT TOOLED | |
| 31402-4400 | 31402-4410 | | | D | | | GREEN | | | | | NOT TOOLED | |
| 31402-4500 | 31402-4510 | | | B | | | BLACK | | | | | NOT TOOLED | |
| 31402-4600 | 31402-4610 | | | C | | | BLACK | | | | | NOT TOOLED | |
| 31402-4700 | 31402-4710 | | | D | | | BLACK | | | | | NOT TOOLED | |
| 31403-4100 | 31403-4110 | | | A | | | BLACK | | | MOLEX 0.64 | | NOT TOOLED | |
| 31403-4200 | 31403-4210 | | | B | | | GRAY | | | | | NOT TOOLED | |
| 31403-4300 | 31403-4310 | | | C | | | BROWN | | | | | NOT TOOLED | |
| 31403-4400 | 31403-4410 | | | D | | | GREEN | | | | | NOT TOOLED | |
| 31403-4500 | 31403-4510 | | | B | | | BLACK | | | | | NOT TOOLED | |
| 31403-4600 | 31403-4610 | | | C | | | BLACK | | | | | NOT TOOLED | |
| 31403-4700 | 31403-4710 | | | D | | | BLACK | | | | | NOT TOOLED | |
| 31404-4100 | 31404-4110 | | | A | | | BLACK | | | YAZAKI KAIZEN 0.64 TE GEN Y 0.64 JST AIT 0.64 | | NOT TOOLED | |
| 31404-4200 | 31404-4210 | | | B | | | GRAY | | | | | NOT TOOLED | |
| 31404-4300 | 31404-4310 | | | C | | | BROWN | | | | | NOT TOOLED | |
| 31404-4400 | 31404-4410 | | | D | | | GREEN | | | | | NOT TOOLED | |
| 31404-4500 | 31404-4510 | | | B | | | BLACK | | | | | NOT TOOLED | |
| 31404-4600 | 31404-4610 | | | C | | | BLACK | | | | | NOT TOOLED | |
| 31404-4700 | 31404-4710 | | | D | | | BLACK | | | | | NOT TOOLED | |

THIS DRAWING CONTAINS INFORMATION THAT IS PROPRIETARY TO MOLEX ELECTRONIC TECHNOLOGIES, LLC AND SHOULD NOT BE USED WITHOUT WRITTEN PERMISSION

FUNCTIONAL SYMBOLS
FA = 0
FC = 0
FP = 0
DIVISIONAL SYMBOLS

| DIMENSION UNITS | SCALE |
|---|---|
| MM | 1:1 |

GENERAL TOLERANCES (UNLESS SPECIFIED)

| | | |
|---|---|---|
| ANGULAR TOL | ± | 3 ° |
| 4 PLACES | ± | 0 |
| 3 PLACES | ± | 0 |
| 2 PLACES | ± | 0.13 |
| 1 PLACE | ± | 0.3 |
| 0 PLACES | ± | 0 |

DRAFT WHERE APPLICABLE MUST REMAIN WITHIN DIMENSIONS

CURRENT REV DESC: MX64 - 1x3 CVP PNs added

EC NO: CO-000021437
DRWN: Mario Gazca 07-Oct-2024
CHK'D: MAURICIO RUIZ 27-Feb-2025
APPR: Brittney Cotter 12-Mar-2025

INITIAL REVISION:
DRWN: RFC_PLMIMP 01-Mar-2004
APPR: PBERG 30-Sep-2004

molex

0.64 USCAR CONNECTOR
SEALED SINGLE ROW ASSEMBLY

PRODUCT CUSTOMER DRAWING

| DOCUMENT NUMBER | DOC TYPE | DOC PART | REVISION |
|---|---|---|---|
| SD-31402-211 | PSD | 001 | U8 |

| THIRD ANGLE PROJECTION | DRAWING | SERIES | MATERIAL NUMBER | CUSTOMER | SHEET NUMBER |
|---|---|---|---|---|---|
| | D-SIZE | 31402 | | GENERAL MARKET | 6 OF 8 |

| DOCUMENT STATUS | Production | RELEASE DATE | 12-Mar-2025 02:34:41 |
|---|---|---|---|

TEMPLATE: 2D-SD-DRAWING-C
FORMAT: 2D-SD-FORMAT-C
DATE: 2020-01-14

| PART NUMBER WITHOUT CPA | PART NUMBER WITH CPA | CLIPSLOT OPTION | ROW/ CIRCUITS | KEY* | MATTE SEAL COLOR | PERIMETER SEAL COLOR | CONNECTOR COLOR | WIDTH DIM (A) | MIN. PASS THRU DIA. | FEMALE TERMINAL SUPPLIER | USCAR FOOTPRINT DRAWING NO. | STATUS |
|---|---|---|---|---|---|---|---|---|---|---|---|---|
| 31402-5100 | 31402-5110 | NO | 1 X 5 | A | TBD | TBD | BLACK | 23.80 | (24.28) | TYCO OR MOLEX GET 0.64 | 064-S-005-1-Z02 | NOT TOOLED |
| 31402-5200 | 31402-5210 | | | B | | | GRAY | | | | | NOT TOOLED |
| 31402-5300 | 31402-5310 | | | C | | | BROWN | | | | | NOT TOOLED |
| 31402-5400 | 31402-5410 | | | D | | | GREEN | | | | | NOT TOOLED |
| 31402-5500 | 31402-5510 | | | B | | | BLACK | | | | | NOT TOOLED |
| 31402-5600 | 31402-5610 | | | C | | | BLACK | | | | | NOT TOOLED |
| 31402-5700 | 31402-5710 | | | D | | | BLACK | | | | | NOT TOOLED |
| 31403-5100 | 31403-5110 | | | A | | | BLACK | | | MOLEX 0.64 | | NOT TOOLED |
| 31403-5200 | 31403-5210 | | | B | | | GRAY | | | | | NOT TOOLED |
| 31403-5300 | 31403-5310 | | | C | | | BROWN | | | | | NOT TOOLED |
| 31403-5400 | 31403-5410 | | | D | | | GREEN | | | | | NOT TOOLED |
| 31403-5500 | 31403-5510 | | | B | | | BLACK | | | | | NOT TOOLED |
| 31403-5600 | 31403-5610 | | | C | | | BLACK | | | | | NOT TOOLED |
| 31403-5700 | 31403-5710 | | | D | | | BLACK | | | | | NOT TOOLED |
| 31404-5100 | 31404-5110 | | | A | | | BLACK | | | YAZAKI KAIZEN 0.64 TE GEN Y 0.64 JST AIT 0.64 | | NOT TOOLED |
| 31404-5200 | 31404-5210 | | | B | | | GRAY | | | | | NOT TOOLED |
| 31404-5300 | 31404-5310 | | | C | | | BROWN | | | | | NOT TOOLED |
| 31404-5400 | 31404-5410 | | | D | | | GREEN | | | | | NOT TOOLED |
| 31404-5500 | 31404-5510 | | | B | | | BLACK | | | | | NOT TOOLED |
| 31404-5600 | 31404-5610 | | | C | | | BLACK | | | | | NOT TOOLED |
| 31404-5700 | 31404-5710 | | | D | | | BLACK | | | | | NOT TOOLED |
| 31402-6100 | 31402-6110 | NO | 1 X 6 | A | ROYAL BLUE | LIGHT BLUE | BLACK | 26.33 | (26.82) | TYCO OR MOLEX GET 0.64 | 064-S-006-1-Z02 | SALEABLE |
| 31402-6200 | 31402-6210 | | | B | | | GRAY | | | | | SALEABLE |
| 31402-6500 | 31402-6510 | | | B | | | BLACK | | | | | SALEABLE |
| 31402-6600 | 31402-6610 | | | C | | | BLACK | | | | | SALEABLE |
| 31402-6700 | 31402-6710 | | | D | | | BLACK | | | | | SALEABLE |
| U6 31402-6001 | 31402-6004 | | | A | | | GRAY | | | | | SALEABLE |
| U6 31402-6002 | 31402-6005 | | | C | | | GRAY | | | | | SALEABLE |
| U6 31402-6003 | 31402-6006 | | | D | | | GRAY | | | | | SALEABLE |
| 31403-6100 | 31403-6110 | | | A | | | BLACK | | | MOLEX 0.64 | | SALEABLE |
| 31403-6200 | 31403-6210 | | | B | | | GRAY | | | | | SALEABLE |
| 31403-6500 | 31403-6510 | | | B | | | BLACK | | | | | SALEABLE |
| 31403-6600 | 31403-6610 | | | C | | | BLACK | | | | | SALEABLE |
| 31403-6700 | 31403-6710 | | | D | | | BLACK | | | | | SALEABLE |
| U6 31403-6001 | 31403-6004 | | | A | | | GRAY | | | | | SALEABLE |
| U6 31403-6002 | 31403-6005 | | | C | | | GRAY | | | | | SALEABLE |
| U6 31403-6003 | 31403-6006 | | | D | | | GRAY | | | | | SALEABLE |
| 31404-7100 | 31404-7110 | | | A | | | BLACK | | | YAZAKI KAIZEN 0.64 TE GEN Y 0.64 JST AIT 0.64 | | SALEABLE |
| 31404-7200 | 31404-7210 | | | B | | | GRAY | | | | | SALEABLE |
| 31404-7500 | 31404-7510 | | | B | | | BLACK | | | | | SALEABLE |
| 31404-7600 | 31404-7610 | | | C | | | BLACK | | | | | SALEABLE |
| 31404-7700 | 31404-7710 | | | D | | | BLACK | | | | | SALEABLE |
| 31404-7800 | 31404-7810 | | | C | | | NATURAL | | | | | SALEABLE |
| U6 31404-7001 | 31404-7007 | | | A | | | GRAY | | | | | SALEABLE |
| U6 31404-7002 | 31404-7008 | | | C | | | GRAY | | | | | SALEABLE |
| U6 31404-7003 | 31404-7009 | | | D | | | GRAY | | | | | SALEABLE |
| U6 31404-7004 | 31404-7010 | | | A | | | NATURAL | | | | | SALEABLE |
| U6 31404-7005 | 31404-7011 | | | B | | | NATURAL | | | | | SALEABLE |
| U6 31404-7006 | 31404-7012 | | | D | | | NATURAL | | | | | SALEABLE |

THIS DRAWING CONTAINS INFORMATION THAT IS PROPRIETARY TO MOLEX ELECTRONIC TECHNOLOGIES, LLC AND SHOULD NOT BE USED WITHOUT WRITTEN PERMISSION

FUNCTIONAL SYMBOLS
FA = 0
FC = 0
FP = 0
DIVISIONAL SYMBOLS

| DIMENSION UNITS | SCALE |
|---|---|
| MM | 1:1 |

GENERAL TOLERANCES (UNLESS SPECIFIED)

| | | |
|---|---|---|
| ANGULAR TOL | ± | 3 ° |
| 4 PLACES | ± | 0 |
| 3 PLACES | ± | 0 |
| 2 PLACES | ± | 0.13 |
| 1 PLACE | ± | 0.3 |
| 0 PLACES | ± | 0 |

DRAFT WHERE APPLICABLE MUST REMAIN WITHIN DIMENSIONS

CURRENT REV DESC: MX64 - 1x3 CVP PNs added

EC NO: CO-000021437
DRWN: Mario Gazca 07-Oct-2024
CHK'D: MAURICIO RUIZ 27-Feb-2025
APPR: Brittney Cotter 12-Mar-2025

INITIAL REVISION:
DRWN: RFC_PLMIMP 01-Mar-2004
APPR: PBERG 30-Sep-2004

molex

0.64 USCAR CONNECTOR
SEALED SINGLE ROW ASSEMBLY

PRODUCT CUSTOMER DRAWING

| DOCUMENT NUMBER | DOC TYPE | DOC PART | REVISION |
|---|---|---|---|
| SD-31402-211 | PSD | 001 | U8 |

| THIRD ANGLE PROJECTION | DRAWING | SERIES | MATERIAL NUMBER | CUSTOMER | SHEET NUMBER |
|---|---|---|---|---|---|
| | D-SIZE | 31402 | | GENERAL MARKET | 7 OF 8 |

| DOCUMENT STATUS | Production | RELEASE DATE | 12-Mar-2025 02:34:41 |
|---|---|---|---|

ADDITIONAL CAVITY PLUG CONFIGURATIONS:

| ROW/ CIRCUITS | FEMALE TERMINAL | MOLEX P/N WITH CPA | MOLEX P/N WITHOUT CPA | KEY OPTION | CLIPSLOT OPTION | COLOR | CIRCUIT NUMBER: "0" INDICATED PLUG LOCATION 1 | 2 | 3 | 4 | 5 | 6 | TOTAL CIRCUITS PLUGGED | STATUS | |
|---|---|---|---|---|---|---|---|---|---|---|---|---|---|---|---|
| 1X6 | TYCO/MOLEX GET | 31402-6110 | 31402-6100 | A | NO | BLACK | | | | | | | 0 | SALEABLE | |
| | | 31402-6111 | 31402-6101 | A | NO | BLACK | 0 | 0 | 0 | 0 | 0 | 0 | 6 | SALEABLE | |
| | | 31402-6112 | 31402-6102 | A | NO | BLACK | 0 | 0 | | | | | 2 | SALEABLE | |
| | | 31402-6113 | 31402-6103 | A | NO | BLACK | | 0 | | | | | 1 | SALEABLE | |
| | | 31402-6114 | 31402-6104 | A | NO | BLACK | 0 | 0 | 0 | 0 | | | 4 | SALEABLE | |
| | | 31402-6115 | 31402-6105 | A | NO | BLACK | | | 0 | | 0 | 0 | 3 | SALEABLE | |
| | | 31402-6118 | 31402-6108 | A | NO | BLACK | | | | | 0 | | 1 | SALEABLE | |
| | | 31402-6119 | 31402-6109 | A | NO | BLACK | | | 0 | | | | 1 | SALEABLE | |
| | | 31402-6131 | 31402-6121 | A | NO | BLACK | | | | 0 | | | 1 | SALEABLE | S |
| | | 31402-6132 | 31402-6122 | A | NO | BLACK | 0 | 0 | 0 | | | | 3 | SALEABLE | U5 |
| | | 31402-6133 | 31402-6123 | A | NO | BLACK | | | | 0 | 0 | 0 | 3 | SALEABLE | U5 |
| | | 31402-6150 | 31402-6140 | A | YES | BLACK | | | | | | | 0 | SALEABLE | |
| | | 31402-6211 | 31402-6201 | B | NO | GRAY | 0 | 0 | 0 | 0 | 0 | 0 | 6 | SALEABLE | T4 |
| | | 31402-6511 | 31402-6501 | B | NO | BLACK | 0 | 0 | 0 | 0 | 0 | 0 | 6 | SALEABLE | T4 |
| | | 31402-6611 | 31402-6601 | C | NO | BLACK | 0 | 0 | 0 | 0 | 0 | 0 | 6 | SALEABLE | T4 |
| | | 31402-6711 | 31402-6701 | D | NO | BLACK | 0 | 0 | 0 | 0 | 0 | 0 | 6 | SALEABLE | T4 |
| | | 31402-6134 | 31402-6124 | A | NO | BLACK | 0 | 0 | | | 0 | 0 | 4 | SALEABLE | U7 |
| | MOLEX 0.64 | 31403-6110 | 31403-6100 | A | NO | BLACK | | | | | | | 0 | SALEABLE | |
| | | 31403-6111 | 31403-6101 | A | NO | BLACK | 0 | 0 | 0 | 0 | 0 | 0 | 6 | SALEABLE | |
| | | 31403-6112 | 31403-6102 | A | NO | BLACK | | | 0 | | | | 1 | SALEABLE | |
| | | 31403-6113 | 31403-6103 | A | NO | BLACK | 0 | 0 | 0 | | 0 | | 4 | SALEABLE | |
| | | 31403-6114 | 31403-6104 | A | NO | BLACK | | | | | 0 | 0 | 2 | SALEABLE | |
| | | 31403-6115 | 31403-6105 | A | NO | BLACK | | | 0 | | 0 | 0 | 3 | SALEABLE | U5 |
| | | 31403-6211 | 31403-6201 | B | NO | GRAY | 0 | 0 | 0 | 0 | 0 | 0 | 6 | SALEABLE | T4 |
| | | 31403-6212 | 31403-6202 | B | NO | GRAY | | | | 0 | 0 | 0 | 3 | SALEABLE | |
| | | 31403-6511 | 31403-6501 | B | NO | BLACK | 0 | 0 | 0 | 0 | 0 | 0 | 6 | SALEABLE | T4 |
| | | 31403-6512 | 31403-6502 | B | NO | BLACK | | | | 0 | | | 1 | SALEABLE | U5 |
| | | 31403-6611 | 31403-6601 | C | NO | BLACK | 0 | 0 | 0 | 0 | 0 | 0 | 6 | SALEABLE | T4 |
| | | 31403-6711 | 31403-6701 | D | NO | BLACK | 0 | 0 | 0 | 0 | 0 | 0 | 6 | SALEABLE | T4 |
| | YAZAKI KAIZEN 0.64 TE GEN Y 0.64 JST AIT 0.64 | 31404-7110 | 31404-7100 | A | NO | BLACK | | | | | | | 0 | SALEABLE | |
| | | 31404-7111 | 31404-7101 | A | NO | BLACK | 0 | 0 | 0 | 0 | 0 | 0 | 6 | SALEABLE | |
| | | 31404-7112 | 31404-7102 | A | NO | BLACK | 0 | | 0 | | | | 2 | SALEABLE | |
| | | 31404-7113 | 31404-7103 | A | NO | BLACK | 0 | | | | | 0 | 2 | SALEABLE | |
| | | 31404-7116 | 31404-7106 | A | NO | BLACK | | | | | | 0 | 1 | SALEABLE | |
| | | 31404-7117 | 31404-7107 | A | NO | BLACK | 0 | | 0 | | | 0 | 3 | SALEABLE | |
| | | 31404-7118 | 31404-7108 | A | NO | BLACK | 0 | | | | | | 1 | SALEABLE | |
| | | 31404-7119 | 31404-7109 | A | NO | BLACK | | | 0 | | 0 | 0 | 3 | SALEABLE | |
| | | 31404-7132 | 31404-7122 | A | NO | BLACK | | | 0 | | | | 1 | SALEABLE | |
| | | 31404-7133 | 31404-7123 | A | NO | BLACK | | 0 | | | | | 1 | SALEABLE | T5 |
| | | 31404-7134 | 31404-7124 | A | NO | BLACK | | | | 0 | | 0 | 2 | SALEABLE | T6 |
| | | 31404-7135 | 31404-7125 | A | NO | BLACK | | 0 | | 0 | | | 2 | SALEABLE | T7 |
| | | 31404-7136 | 31404-7126 | A | NO | BLACK | | | | 0 | 0 | | 2 | SALEABLE | U2 |
| | | 31404-7213 | 31404-7203 | B | NO | GRAY | 0 | | | | | 0 | 2 | SALEABLE | |
| | | 31404-7214 | 31404-7204 | B | NO | GRAY | | | | | | 0 | 1 | SALEABLE | T6 |
| | | 31404-7215 | 31404-7205 | B | NO | GRAY | | 0 | | | | | 1 | SALEABLE | T7 |
| | | 31404-7216 | 31404-7206 | B | NO | GRAY | | 0 | | | 0 | 0 | 3 | SALEABLE | |
| | | 31404-7812 | 31404-7802 | C | NO | NATURAL | | | | 0 | 0 | 0 | 3 | SALEABLE | T6 |
| | | 31404-7813 | 31404-7803 | C | NO | NATURAL | | 0 | | | | | 1 | SALEABLE | T8 |
| | | 31404-7814 | 31404-7804 | C | NO | NATURAL | | 0 | | | 0 | 0 | 3 | SALEABLE | T5 |
| | | 31404-7912 | 31404-7902 | D | NO | GRAY | | 0 | | | | | 1 | SALEABLE | T7 |
| | | 31404-7913 | 31404-7903 | D | NO | GRAY | | 0 | | 0 | | | 2 | SALEABLE | |
| 1X2 | TYCO/MOLEX GET | 31402-2111 | 31402-2101 | A | NO | BLACK | 0 | 0 | | | | | 2 | SALEABLE | U7 |
| 1X3 | TYCO/MOLEX GET | 31402-3113 | 31402-3103 | A | NO | BLACK | | | 0 | | | | 1 | SALEABLE | |
| | | 31402-3114 | 31402-3104 | A | NO | BLACK | 0 | | | | | | 1 | SALEABLE | T4 |
| | | 31402-3115 | 31402-3105 | A | NO | BLACK | | 0 | | | | | 1 | SALEABLE | U1 |
| | MOLEX 0.64 | 31403-3132 | 31403-3122 | A | NO | GRAY | | 0 | | | | | 1 | SALEABLE | P |
| | | 31403-3112 | 31403-3102 | A | NO | BLACK | | 0 | | | | | 1 | SALEABLE | U8 |
| | YAZAKI KAIZEN 0.64, TE GEN Y 0.64,JST AIT 0.64 | 31404-3112 | 31404-3102 | A | NO | BLACK | | 0 | | | | | 1 | SALEABLE | R |

THIS DRAWING CONTAINS INFORMATION THAT IS PROPRIETARY TO MOLEX ELECTRONIC TECHNOLOGIES, LLC AND SHOULD NOT BE USED WITHOUT WRITTEN PERMISSION

FUNCTIONAL SYMBOLS: FA = 0, FC = 0, FF = 0

DIVISIONAL SYMBOLS

| DIMENSION UNITS | SCALE |
|---|---|
| MM | 1:1 |

GENERAL TOLERANCES (UNLESS SPECIFIED)

| | | |
|---|---|---|
| ANGULAR TOL | ± | 3 ° |
| 4 PLACES | ± | 0 |
| 3 PLACES | ± | 0 |
| 2 PLACES | ± | 0.13 |
| 1 PLACE | ± | 0.3 |
| 0 PLACES | ± | 0 |

DRAFT WHERE APPLICABLE MUST REMAIN WITHIN DIMENSIONS

CURRENT REV DESC: MX64 - 1x3 CVP PNs added

EC NO: CO-000021437
DRWN: Mario Gazca 07-Oct-2024
CHK'D: MAURICIO RUIZ 27-Feb-2025
APPR: Brittney Cotter 12-Mar-2025

INITIAL REVISION:
DRWN: RFC_PLMIMP 01-Mar-2004
APPR: PBERG 30-Sep-2004

molex

0.64 USCAR CONNECTOR
SEALED SINGLE ROW ASSEMBLY

PRODUCT CUSTOMER DRAWING

| DOCUMENT NUMBER | DOC TYPE | DOC PART | REVISION |
|---|---|---|---|
| SD-31402-211 | PSD | 001 | U8 |

| THIRD ANGLE PROJECTION | DRAWING | SERIES | MATERIAL NUMBER | CUSTOMER | SHEET NUMBER |
|---|---|---|---|---|---|
| | D-SIZE | 31402 | | GENERAL MARKET | 8 OF 8 |

| DOCUMENT STATUS | Production | RELEASE DATE | 12-Mar-2025 02:34:41 |
|---|---|---|---|

TEMPLATE: molex-electronic-PORTRAIT.dwt
DATE: 2020-01-14