molex

MX64 8 WAY-SEALED RECEPTACLE ASSEMBLY
BOM AND PIN OUT SHEET

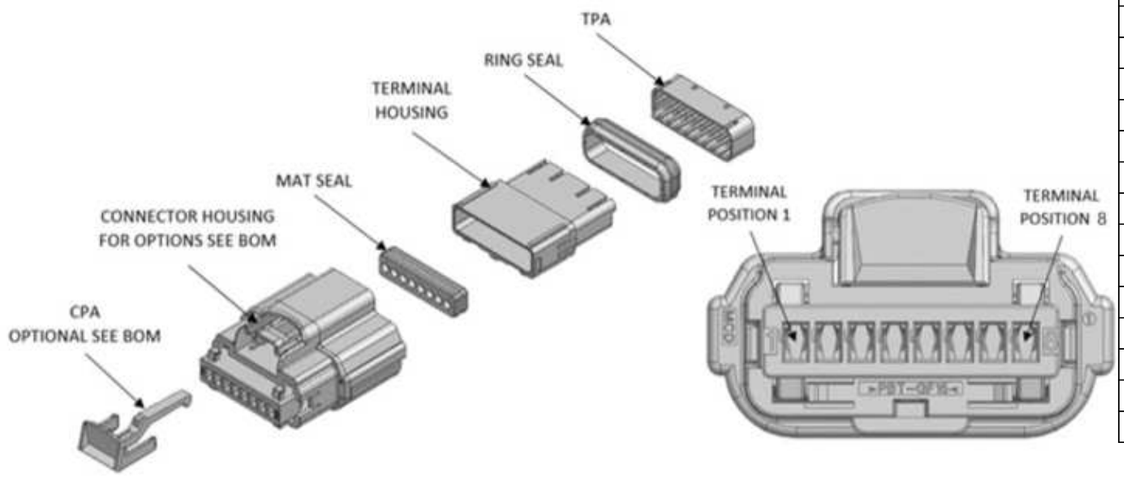

ABBREVIATION	DESCRIPTION	COLOR	MATERIAL
A-BLACK	HOUSING, KEYING OPTION A	BLACK	PBT GF15
B-BLACK	HOUSING, KEYING OPTION B	BLACK	PBT GF15
C-BLACK	HOUSING, KEYING OPTION C	BLACK	PBT GF15
A-LT GRAY	HOUSING, KEYING OPTION D	LIGHT BLUE	PBT GF15
B-LT GRAY	HOUSING, KEYING OPTION A	LIGHT BLUE	PBT GF15
C-LT GRAY	HOUSING, KEYING OPTION B	LIGHT BLUE	PBT GF15
A-DK GRAY	HOUSING, KEYING OPTION C	DARK BLUE	PBT GF15
B-DK GRAY	HOUSING, KEYING OPTION D	DARK BLUE	PBT GF15
C-DK GRAY	HOUSING, KEYING OPTION A	DARK BLUE	PBT GF15
TML HSG	TERMINAL HOUSING	BLACK	PBT GF15
TPA	TPA	NATURAL	PBT GF30
CPA	CPA	RED	PBT GF30
M	MAT SEAL	DARK BLUE	INHERENTLY LUBRICATED SILICONE
R	RING SEAL	LIGHT BLUE	INHERENTLY LUBRICATED SILICONE

FOR ADDITIONAL INFORMATION SEE SD-31404-811

ASSEMBLY DESCRIPTION	ASSEMBLY PART NUMBER	COMPONENT			BLOCKED TERMINALS								STATUS	COMMENT	INTEGRAL COMPONENTS SOLD SEPARATELY	
		THE PRESENCE OF AN ABBREVIATION INDICATES THE PRESENCE OF THAT COMPONENT			CAVITY WITH A NUMBER INDICATES BLOCKED TERMINAL POSITION CAVITY WITHOUT A NUMBER INDICATES OPEN TERMINAL POSITION										DRESS COVER	
		CPA	KEY	COLOR											HORIZONTAL	VERTICAL
MX64 FEM 1X8 KAIZAN WOCPA BLK POLB/8	314049001	NO	B	BLACK	-	-	-	-	-	-	-	-	SALEABLE		31414-8600	31414-8700
MX64 FEM 1X8 KAIZAN WOCPA BLK POLC/8	314049002	NO	C	BLACK	-	-	-	-	-	-	-	-	SALEABLE		31414-8600	31414-8700
MX64 FEM 1X8 KAIZAN WOCPA LTGY POLC/8	314049003	NO	C	LT GRAY	-	-	-	-	-	-	-	-	SALEABLE		31414-8600	31414-8700
MX64 FEM 1X8 KAIZAN WOCPA DKGY POLA/8	314049004	NO	A	DK GRAY	-	-	-	-	-	-	-	-	SALEABLE		31414-8600	31414-8700
MX64 FEM 1X8 KAIZAN WOCPA DKGY POLB/8	314049005	NO	B	DK GRAY	-	-	-	-	-	-	-	-	SALEABLE		31414-8600	31414-8700
MX64 FEM 1X8 KAIZAN W/CPA BLK POLB/8	314049006	YES	B	BLACK	-	-	-	-	-	-	-	-	SALEABLE		31414-8600	31414-8700
MX64 FEM 1X8 KAIZAN W/CPA BLK POLC/8	314049007	YES	C	BLACK	-	-	-	-	-	-	-	-	SALEABLE		31414-8600	31414-8700
MX64 FEM 1X8 KAIZAN W/CPA LTGY POLC/8	314049008	YES	C	LT GRAY	-	-	-	-	-	-	-	-	SALEABLE		31414-8600	31414-8700
MX64 FEM 1X8 KAIZAN W/CPA DKGY POLA/8	314049009	YES	A	DK GRAY	-	-	-	-	-	-	-	-	SALEABLE		31414-8600	31414-8700
MX64 FEM 1X8 KAIZAN W/CPA DKGY POLB/8	314049010	YES	B	DK GRAY	-	-	-	-	-	-	-	-	SALEABLE		31414-8600	31414-8700
MX64 FEM 1X8 KAIZAN WOCPA BLK POLA/8	314049100	NO	A	BLACK	-	-	-	-	-	-	-	-	SALEABLE		31414-8600	31414-8700
MX64 FEM 1X8 KAIZAN WOCPA BLK POLA/7	314049101	NO	A	BLACK	-	-	3	-	-	-	-	-	SALEABLE		31414-8600	31414-8700
MX64 FEM 1X8 KAIZAN WOCPA BLK POLA/6	314049102	NO	A	BLACK	-	-	3	4	-	-	-	-	SALEABLE		31414-8600	31414-8700
MX64 FEM 1X8 KAIZAN WOCPA BLK POLA/5	314049103	NO	A	BLACK	1	-	-	-	-	6	-	8	SALEABLE		31414-8600	31414-8700
MX64 FEM 1X8 KAIZAN WOCPA BLK POLA/4	314049104	NO	A	BLACK	1	2	3	4	-	-	-	-	SALEABLE		31414-8600	31414-8700
MX64 FEM 1X8 KAIZAN WOCPA BLK POLA/3	314049105	NO	A	BLACK	1	2	3	4	-	6	-	-	SALEABLE		31414-8600	31414-8700
MX64 FEM 1X8 KAIZAN WOCPA BLK POLA/2	314049106	NO	A	BLACK	-	2	-	4	5	6	7	8	SALEABLE		31414-8600	31414-8700

molex

MX64 8 WAY-SEALED RECEPTACLE ASSEMBLY
BOM AND PIN OUT SHEET

ASSEMBLY DESCRIPTION	ASSEMBLY PART NUMBER	COMPONENT			BLOCKED TERMINALS								STATUS	COMMENT	INTEGRAL COMPONENTS SOLD SEPARATELY	
		THE PRESENCE OF AN ABBREVIATION INDICATES THE PRESENCE OF THAT COMPONENT			CAVITY WITH A NUMBER INDICATES BLOCKED TERMINAL POSITION CAVITY WITHOUT A NUMBER INDICATES OPEN TERMINAL POSITION										DRESS COVER	
		CPA	KEY	COLOR											HORIZONTAL	VERTICAL
MX64 FEM 1X8 KAIZAN WOCPA BLK POLA/6	314049107	NO	A	BLACK	-	-	-	-	-	-	7	8	SALEABLE		31414-8600	31414-8700
MX64 FEM 1X8 KAIZAN WOCPA BLK POLA/5	314049108	NO	A	BLACK	-	-	-	-	5	-	7	8	SALEABLE		31414-8600	31414-8700
MX64 FEM 1X8 KAIZAN WOCPA BLK POLA/5	314049109	NO	A	BLACK	-	-	3	4	5	-	-	-	SALEABLE		31414-8600	31414-8700
MX64 FEM 1X8 KAIZAN W/CPA BLK POLA/8	314049110	YES	A	BLACK	-	-	-	-	-	-	-	-	SALEABLE		31414-8600	31414-8700
MX64 FEM 1X8 KAIZAN W/CPA BLK POLA/7	314049111	YES	A	BLACK	-	-	3	-	-	-	-	-	SALEABLE		31414-8600	31414-8700
MX64 FEM 1X8 KAIZAN W/CPA BLK POLA/6	314049112	YES	A	BLACK	-	-	3	4	-	-	-	-	SALEABLE		31414-8600	31414-8700
MX64 FEM 1X8 KAIZAN W/CPA BLK POLA/5	314049113	YES	A	BLACK	1	-	-	-	-	6	-	8	SALEABLE		31414-8600	31414-8700
MX64 FEM 1X8 KAIZAN W/CPA BLK POLA/4	314049114	YES	A	BLACK	1	2	3	4	-	-	-	-	SALEABLE		31414-8600	31414-8700
MX64 FEM 1X8 KAIZAN W/CPA BLK POLA/3	314049115	YES	A	BLACK	1	2	3	4	-	6	-	-	SALEABLE		31414-8600	31414-8700
MX64 FEM 1X8 KAIZAN W/CPA BLK POLA/2	314049116	YES	A	BLACK	-	2	-	4	5	6	7	8	SALEABLE		31414-8600	31414-8700
MX64 FEM 1X8 KAIZAN W/CPA BLK POLA/6	314049117	YES	A	BLACK	-	-	-	-	-	-	7	8	SALEABLE		31414-8600	31414-8700
MX64 FEM 1X8 KAIZAN W/CPA BLK POLA/5	314049118	YES	A	BLACK	-	-	-	-	5	-	7	8	SALEABLE		31414-8600	31414-8700
MX64 FEM 1X8 KAIZAN W/CPA BLK POLA/5	314049119	YES	A	BLACK	-	-	3	4	5	-	-	-	SALEABLE		31414-8600	31414-8700
MX64 FEM 1X8 KAIZAN WOCPA BLK POLA/7	314049121	NO	A	BLACK	-	-	-	4	-	-	-	-	SALEABLE		31414-8600	31414-8700
MX64 FEM 1X8 KAIZAN WOCPA BLK POLA/6	314049122	NO	A	BLACK	-	-	3	-	-	-	7	-	SALEABLE		31414-8600	31414-8700
MX64 FEM 1X8 KAIZAN WOCPA BLK POLA/5	314049123	NO	A	BLACK	1	-	3	-	-	-	-	8	SALEABLE		31414-8600	31414-8700
MX64 FEM 1X8 KAIZAN WOCPA BLK POLA/4	314049124	NO	A	BLACK	1	2	-	-	-	6	7	-	SALEABLE		31414-8600	31414-8700
MX64 FEM 1X8 KAIZAN WOCPA BLK POLA/4	314049125	NO	A	BLACK	-	-	-	-	5	6	7	8	SALEABLE		31414-8600	31414-8700
MX64 FEM 1X8 KAIZAN WOCPA BLK POLA/2	314049126	NO	A	BLACK	1	2	3	4	-	6	7	-	SALEABLE		31414-8600	31414-8700
MX64 FEM 1X8 KAIZAN WOCPA BLK POLA/5	314049127	NO	A	BLACK	-	-	-	4	5	-	7	-	SALEABLE		31414-8600	31414-8700
MX64 FEM 1X8 KAIZAN WOCPA BLK POLA/5	314049128	NO	A	BLACK	-	-	-	4	5	6	-	-	SALEABLE		31414-8600	31414-8700
MX64 FEM 1X8 KAIZAN WOCPA BLK POLA/6	314049129	NO	A	BLACK	-	-	-	-	5	-	7	-	SALEABLE		31414-8600	31414-8700
MX64 FEM 1X8 KAIZAN W/CPA BLK POLA/7	314049131	YES	A	BLACK	-	-	-	4	-	-	-	-	SALEABLE		31414-8600	31414-8700
MX64 FEM 1X8 KAIZAN W/CPA BLK POLA/6	314049132	YES	A	BLACK	-	-	3	-	-	-	7	-	SALEABLE		31414-8600	31414-8700
MX64 FEM 1X8 KAIZAN W/CPA BLK POLA/5	314049133	YES	A	BLACK	1	-	3	-	-	-	-	8	SALEABLE		31414-8600	31414-8700
MX64 FEM 1X8 KAIZAN W/CPA BLK POLA/4	314049134	YES	A	BLACK	1	2	-	-	-	6	7	-	SALEABLE		31414-8600	31414-8700
MX64 FEM 1X8 KAIZAN W/CPA BLK POLA/4	314049135	YES	A	BLACK	-	-	-	-	5	6	7	8	SALEABLE		31414-8600	31414-8700

molex

MX64 8 WAY-SEALED RECEPTACLE ASSEMBLY
BOM AND PIN OUT SHEET

ASSEMBLY DESCRIPTION	ASSEMBLY PART NUMBER	COMPONENT			BLOCKED TERMINALS								STATUS	COMMENT	INTEGRAL COMPONENTS SOLD SEPARATELY	
		THE PRESENCE OF AN ABBREVIATION INDICATES THE PRESENCE OF THAT COMPONENT			CAVITY WITH A NUMBER INDICATES BLOCKED TERMINAL POSITION CAVITY WITHOUT A NUMBER INDICATES OPEN TERMINAL POSITION										DRESS COVER	
		CPA	KEY	COLOR											HORIZONTAL	VERTICAL
MX64 FEM 1X8 KAIZAN W/CPA BLK POLA/2	314049136	YES	A	BLACK	1	2	3	4	-	6	7	-	SALEABLE		31414-8600	31414-8700
MX64 FEM 1X8 KAIZAN W/CPA BLK POLA/5	314049137	YES	A	BLACK	-	-	-	4	5	-	7	-	SALEABLE		31414-8600	31414-8700
MX64 FEM 1X8 KAIZAN W/CPA BLK POLA/5	314049138	YES	A	BLACK	-	-	-	4	5	6	-	-	SALEABLE		31414-8600	31414-8700
MX64 FEM 1X8 KAIZAN W/CPA BLK POLA/6	314049139	YES	A	BLACK	-	-	-	-	5	-	7	-	SALEABLE		31414-8600	31414-8700
MX64 FEM 1X8 KAIZAN WOCPA BLK POLA/7	314049141	NO	A	BLACK	-	-	-	-	-	6	-	-	SALEABLE		31414-8600	31414-8700
MX64 FEM 1X8 KAIZAN WOCPA BLK POLA/6	314049142	NO	A	BLACK	-	2	-	-	-	6	-	-	SALEABLE		31414-8600	31414-8700
MX64 FEM 1X8 KAIZAN WOCPA BLK POLA/5	314049143	NO	A	BLACK	1	-	3	-	-	6	-	-	SALEABLE		31414-8600	31414-8700
MX64 FEM 1X8 KAIZAN WOCPA BLK POLA/5	314049144	NO	A	BLACK	-	-	-	-	-	6	7	8	SALEABLE		31414-8600	31414-8700
MX64 FEM 1X8 KAIZAN W/CPA BLK POLA/7	314049151	YES	A	BLACK	-	-	-	-	-	6	-	-	SALEABLE		31414-8600	31414-8700
MX64 FEM 1X8 KAIZAN W/CPA BLK POLA/6	314049152	YES	A	BLACK	-	2	-	-	-	6	-	-	SALEABLE		31414-8600	31414-8700
MX64 FEM 1X8 KAIZAN W/CPA BLK POLA/5	314049153	YES	A	BLACK	1	-	3	-	-	6	-	-	SALEABLE		31414-8600	31414-8700
MX64 FEM 1X8 KAIZAN W/CPA BLK POLA/5	314049154	YES	A	BLACK	-	-	-	-	-	6	7	8	SALEABLE		31414-8600	31414-8700
MX64 FEM 1X8 KAIZAN WOCPA BLK POLA/7	314049161	NO	A	BLACK	-	2	-	-	-	-	-	-	SALEABLE		31414-8600	31414-8700
MX64 FEM 1X8 KAIZAN WOCPA BLK POLA/6	314049162	NO	A	BLACK	1	2	-	-	-	-	-	-	SALEABLE		31414-8600	31414-8700
MX64 FEM 1X8 KAIZAN WOCPA BLK POLA/5	314049163	NO	A	BLACK	1	2	-	-	-	6	-	-	SALEABLE		31414-8600	31414-8700
MX64 FEM 1X8 KAIZAN W/CPA BLK POLA/7	314049171	YES	A	BLACK	-	2	-	-	-	-	-	-	SALEABLE		31414-8600	31414-8700
MX64 FEM 1X8 KAIZAN W/CPA BLK POLA/6	314049172	YES	A	BLACK	1	2	-	-	-	-	-	-	SALEABLE		31414-8600	31414-8700
MX64 FEM 1X8 KAIZAN W/CPA BLK POLA/5	314049173	YES	A	BLACK	1	2	-	-	-	6	-	-	SALEABLE		31414-8600	31414-8700
MX64 FEM 1X8 KAIZAN WOCPA BLK POLA/6	314049182	NO	A	BLACK	-	-	3	-	-	6	-	-	SALEABLE		31414-8600	31414-8700
MX64 FEM 1X8 KAIZAN WOCPA BLK POLA/5	314049183	NO	A	BLACK	1	-	-	4	-	6	-	-	SALEABLE		31414-8600	31414-8700
MX64 FEM 1X8 KAIZAN W/CPA BLK POLA/6	314049192	YES	A	BLACK	-	-	3	-	-	6	-	-	SALEABLE		31414-8600	31414-8700
MX64 FEM 1X8 KAIZAN W/CPA BLK POLA/5	314049193	YES	A	BLACK	1	-	-	4	-	6	-	-	SALEABLE		31414-8600	31414-8700
MX64 FEM 1X8 KAIZAN WOCPA LTGY POLB/8	314049200	NO	B	LT GRAY	-	-	-	-	-	-	-	-	SALEABLE		31414-8600	31414-8700
MX64 FEM 1X8 KAIZAN WOCPA LTGY POLB/5	314049203	NO	B	LT GRAY	-	-	3	-	-	-	7	8	SALEABLE		31414-8600	31414-8700
MX64 FEM 1X8 KAIZAN WOCPA LTGY POLB/4	314049204	NO	B	LT GRAY	-	2	3	-	-	-	7	8	SALEABLE		31414-8600	31414-8700
MX64 FEM 1X8 KAIZAN W/CPA LTGY POLB/8	314049210	YES	B	LT GRAY	-	-	-	-	-	-	-	-	SALEABLE		31414-8600	31414-8700
MX64 FEM 1X8 KAIZAN W/CPA LTGY POLB/5	314049213	YES	B	LT GRAY	-	-	3	-	-	-	7	8	SALEABLE		31414-8600	31414-8700

molex

MX64 8 WAY-SEALED RECEPTACLE ASSEMBLY
BOM AND PIN OUT SHEET

ASSEMBLY DESCRIPTION	ASSEMBLY PART NUMBER	COMPONENT			BLOCKED TERMINALS								STATUS	COMMENT	INTEGRAL COMPONENTS SOLD SEPARATELY	
		THE PRESENCE OF AN ABBREVIATION INDICATES THE PRESENCE OF THAT COMPONENT			CAVITY WITH A NUMBER INDICATES BLOCKED TERMINAL POSITION CAVITY WITHOUT A NUMBER INDICATES OPEN TERMINAL POSITION										DRESS COVER	
		CPA	KEY	COLOR											HORIZONTAL	VERTICAL
MX64 FEM 1X8 KAIZAN W/CPA LTGY POLB/4	314049214	YES	B	LT GRAY	-	2	3	-	-	-	7	8	SALEABLE		31414-8600	31414-8700
MX64 FEM 1X8 KAIZAN WOCPA DKGY POLC/8	314049300	NO	C	DK GRAY	-	-	-	-	-	-	-	-	SALEABLE		31414-8600	31414-8700
MX64 FEM 1X8 KAIZAN W/CPA DKGY POLC/8	314049310	YES	C	DK GRAY	-	-	-	-	-	-	-	-	SALEABLE		31414-8600	31414-8700
MX64 FEM 1X8 KAIZAN WOCPA LTGY POLA/7	314049501	NO	A	LT GRAY	-	-	3	-	-	-	-	-	SALEABLE		31414-8600	31414-8700
MX64 FEM 1X8 KAIZAN WOCPA BLK POLA/6	314049502	NO	A	BLACK	-	-	-	-	5	6	-	-	SALEABLE		31414-8600	31414-8700
MX64 FEM 1X8 KAIZAN WOCPA BLK POLA/5	314049503	NO	A	BLACK	1	2	-	4	-	-	-	-	SALEABLE		31414-8600	31414-8700
MX64 FEM 1X8 KAIZAN W/CPA LTGY POLA/7	314049511	YES	A	LT GRAY	-	-	3	-	-	-	-	-	SALEABLE		31414-8600	31414-8700
MX64 FEM 1X8 KAIZAN W/CPA BLK POLA/6	314049512	YES	A	BLACK	-	-	-	-	5	6	-	-	SALEABLE		31414-8600	31414-8700
MX64 FEM 1X8 KAIZAN W/CPA BLK POLA/5	314049513	YES	A	BLACK	1	2	-	4	-	-	-	-	SALEABLE		31414-8600	31414-8700
MX64 FEM 1X8 KAIZAN WOCPA BLK POLA/6	314049522	NO	A	BLACK	-	-	-	4	-	-	7	-	SALEABLE		31414-8600	31414-8700
MX64 FEM 1X8 KAIZAN WOCPA BLK POLA/5	314049523	NO	A	BLACK	1	2	3	-	-	-	-	-	SALEABLE		31414-8600	31414-8700
MX64 FEM 1X8 KAIZAN W/CPA BLK POLA/6	314049532	YES	A	BLACK	-	-	-	4	-	-	7	-	SALEABLE		31414-8600	31414-8700
MX64 FEM 1X8 KAIZAN W/CPA BLK POLA/5	314049533	YES	A	BLACK	1	2	3	-	-	-	-	-	SALEABLE		31414-8600	31414-8700
MX64 FEM 1X8 KAIZAN WOCPA BLK POLA/6	314049542	NO	A	BLACK	-	2	3	-	-	-	-	-	SALEABLE		31414-8600	31414-8700
MX64 FEM 1X8 KAIZAN WOCPA BLK POLA/5	314049543	NO	A	BLACK	-	2	3	-	-	6	-	-	SALEABLE		31414-8600	31414-8700
MX64 FEM 1X8 KAIZAN W/CPA BLK POLA/6	314049552	YES	A	BLACK	-	2	3	-	-	-	-	-	SALEABLE		31414-8600	31414-8700
MX64 FEM 1X8 KAIZAN W/CPA BLK POLA/5	314049553	YES	A	BLACK	-	2	3	-	-	6	-	-	SALEABLE		31414-8600	31414-8700
MX64 FEM 1X8 KAIZAN WOCPA BLK POLA/6	314049562	NO	A	BLACK	-	-	-	4	5	-	-	-	SALEABLE		31414-8600	31414-8700
MX64 FEM 1X8 KAIZAN WOCPA BLK POLA/5	314049563	NO	A	BLACK	-	2	3	-	-	-	7	-	SALEABLE		31414-8600	31414-8700
MX64 FEM 1X8 KAIZAN W/CPA BLK POLA/6	314049572	YES	A	BLACK	-	-	-	4	5	-	-	-	SALEABLE		31414-8600	31414-8700
MX64 FEM 1X8 KAIZAN W/CPA BLK POLA/5	314049573	YES	A	BLACK	-	2	3	-	-	-	7	-	SALEABLE		31414-8600	31414-8700
MX64 FEM 1X8 KAIZAN WOCPA BLK POLA/5	314049583	NO	A	BLACK	-	-	3	-	-	-	7	8	SALEABLE		31414-8600	31414-8700
MX64 FEM 1X8 KAIZAN WOCPA BLK POLA/4	314049584	NO	A	BLACK	-	2	3	-	-	-	7	8	SALEABLE		31414-8600	31414-8700
MX64 FEM 1X8 KAIZAN W/CPA BLK POLA/5	314049593	YES	A	BLACK	-	-	3	-	-	-	7	8	SALEABLE		31414-8600	31414-8700
MX64 FEM 1X8 KAIZAN W/CPA BLK POLA/4	314049594	YES	A	BLACK	-	2	3	-	-	-	7	8	SALEABLE		31414-8600	31414-8700
MX64 FEM 1X8 KAIZAN W/CPA BLK POLA/6	314049595	YES	A	BLACK	-	-	-	-	-	6	-	8	SALEABLE		31414-8600	31414-8700
MX64 FEM 1X8 KAIZAN W/CPA BLK POLA/7	314049596	YES	A	BLACK	-	-	-	-	-	-	7	-	SALEABLE		31414-8600	31414-8700

molex

MX64 8 WAY-SEALED RECEPTACLE ASSEMBLY
BOM AND PIN OUT SHEET

ASSEMBLY DESCRIPTION	ASSEMBLY PART NUMBER	COMPONENT			BLOCKED TERMINALS								STATUS	COMMENT	INTEGRAL COMPONENTS SOLD SEPARATELY	
		THE PRESENCE OF AN ABBREVIATION INDICATES THE PRESENCE OF THAT COMPONENT			CAVITY WITH A NUMBER INDICATES BLOCKED TERMINAL POSITION CAVITY WITHOUT A NUMBER INDICATES OPEN TERMINAL POSITION										DRESS COVER	
		CPA	KEY	COLOR											HORIZONTAL	VERTICAL
MX64 FEM 1X8 KAIZAN W/CPA BLK POLA/6	314049597	YES	A	BLACK	1	-	3	-	-	-	-	-	SALEABLE		31414-8600	31414-8700
MX64 FEM 1X8 KAIZAN W/CPA BLK POLA/7	314049598	YES	A	BLACK	-	-	-	-	-	-	-	8	SALEABLE		31414-8600	31414-8700
MX64 FEM 1X8 KAIZAN W/CPA BLK POLA/3	314049599	YES	A	BLACK	-	2	3	4	-	-	7	8	SALEABLE		31414-8600	31414-8700
MX64 FEM 1X8 KAIZAN W/CPA BLK POLA/0	314049600	YES	A	BLACK	1	2	3	4	5	6	7	8	SALEABLE		31414-8600	31414-8700
MX64 FEM 1X8 KAIZAN WOCPA BLK POLA/4	314049601	NO	A	BLACK	1	2	-	-	5	6	-	-	SALEABLE		31414-8600	31414-8700
MX64 FEM 1X8 KAIZAN WOCPA BLK POLA/3	314049602	NO	A	BLACK	-	-	-	4	5	6	7	8	SALEABLE		31414-8600	31414-8700
MX64 FEM 1X8 KAIZAN W/CPA BLK POLA/4	314049603	YES	A	BLACK	-	2	3	-	5	6	-	-	SALEABLE		31414-8600	31414-8700
MX64 FEM 1X8 KAIZAN W/CPA BLK POLA/6	314049604	YES	A	BLACK	-	-	3	-	5	-	-	-	SALEABLE		31414-8600	31414-8700
MX64 FEM 1X8 KAIZAN W/CPA LTGY POLA/6	314049605	YES	A	LT GRAY	-	-	-	-	-	6	7	-	SALEABLE		31414-8600	31414-8700
MX64 FEM 1X8 KAIZAN W/CPA LTGY POLA/5	314049606	YES	A	LT GRAY	-	-	-	-	5	6	7	-	SALEABLE		31414-8600	31414-8700
MX64 FEM 1X8 KAIZAN W/CPA BLK POLA/5	314049607	YES	A	BLACK	-	2	3	4	-	-	-	-	SALEABLE		31414-8600	31414-8700
MX64 FEM 1X8 KAIZAN W/CPA LTGY POLA/5	314049608	YES	A	LT GRAY	-	2	3	4	-	-	-	-	SALEABLE		31414-8600	31414-8700
MX64 FEM 1X8 KAIZAN W/CPA LTGY POLB/6	314049609	YES	B	LT GRAY	-	2	3	-	-	-	-	-	SALEABLE		31414-8600	31414-8700
MX64 FEM 1X8 KAIZAN W/CPA LTGY POLB/7	314049610	YES	B	LT GRAY	-	2	-	-	-	-	-	-	SALEABLE		31414-8600	31414-8700
MX64 FEM 1X8 KAIZAN W/CPA LTGY POLB/7	314049611	YES	B	LT GRAY	-	-	3	-	-	-	-	-	SALEABLE		31414-8600	31414-8700
MX64 FEM 1X8 KAIZAN WOCPA BLK POLA/5	314049612	NO	A	BLACK	-	-	-	-	5	6	-	8	SALEABLE		31414-8600	31414-8700
MX64 FEM 1X8 KAIZAN W/CPA BLK POLA/6	314049613	YES	A	BLACK	-	-	-	-	-	6	7	-	SALEABLE		31414-8600	31414-8700
MX64 FEM 1X8 KAIZAN W/CPA BLK POLA/6	314049614	YES	A	BLACK	-	-	-	-	5	-	-	8	SALEABLE		31414-8600	31414-8700
MX64 FEM 1X8 KAIZAN W/CPA BLK POLA/5	314049615	YES	A	BLACK	-	-	-	-	5	6	7	-	SALEABLE		31414-8600	31414-8700
MX64 FEM 1X8 KAIZAN W/CPA BLK POLA/5	314049616	YES	A	BLACK	-	-	-	-	5	6	-	8	SALEABLE		31414-8600	31414-8700
MX64 FEM 1X8 KAIZAN W/CPA BLK POLA/6	314049617	YES	A	BLACK	-	-	3	-	-	-	-	8	SALEABLE		31414-8600	31414-8700
MX64 FEM 1X8 KAIZAN W/CPA BLK POLA/5	314049618	YES	A	BLACK	1	-	-	-	5	6	-	-	SALEABLE		31414-8600	31414-8700
MX64 FEM 1X8 KAIZAN W/CPA BLK POLA/5	314049619	YES	A	BLACK	-	-	3	4	-	-	-	8	SALEABLE		31414-8600	31414-8700
MX64 FEM 1X8 KAIZAN W/CPA BLK POLA/5	314049620	YES	A	BLACK	-	-	3	-	5	-	7	-	SALEABLE		31414-8600	31414-8700
MX64 FEM 1X8 KAIZAN W/CPA BLK POLA/5	314049621	YES	A	BLACK	-	2	-	4	-	6	-	-	SALEABLE		31414-8600	31414-8700
MX64 FEM 1X8 KAIZAN W/CPA BLK POLA/7	314049622	YES	A	BLACK	-	-	-	-	5	-	-	-	SALEABLE		31414-8600	31414-8700
MX64 FEM 1X8 KAIZAN W/CPA BLK POLA/5	314049623	YES	A	BLACK	-	-	-	4	-	6	-	8	SALEABLE		31414-8600	31414-8700

WITHOUT CPA MOLEX P/N	WITH CPA MOLEX P/N	CIRCUIT SIZE	POLARIZATION	CONNECTOR HOUSING COLOR	TESTED WITH THE FEMALE TERMINAL	CAVITY WITH A NUMBER INDICATIES BLOCKED TERMINAL POSITION CAVITY WITHOUT A NUMBER INDICATIES OPEN TERMINAL POSITION								TOTAL CIRCUITS PLUGGED	STATUS	WIRE DRESS COVER(OPTIONAL)	
						1	2	3	4	5	6	7	8			HORIZONTAL	VERTICAL
31404-9100	31404-9110	1X8	A	BLACK	TE GEN Y 0.64MM TERMINAL /YAZAKI FLX 0.64MM.TERMINAL									0	SALABLE	31414-8600	31414-8700
31404-9101	31404-9111		A	BLACK				3						1	SALABLE		
31404-9102	31404-9112		A	BLACK				3	4					2	SALABLE		
31404-9103	31404-9113		A	BLACK		1					6		8	3	SALABLE		
31404-9104	31404-9114		A	BLACK		1	2	3	4					4	SALABLE		
31404-9105	31404-9115		A	BLACK		1	2	3	4		6			5	SALABLE		
31404-9106	31404-9116		A	BLACK			2		4	5	6	7	8	6	SALABLE		
31404-9107	31404-9117		A	BLACK								7	8	2	SALABLE	G1	
31404-9108	31404-9118		A	BLACK						5		7	8	3	SALABLE	G1	
31404-9109	31404-9119		A	BLACK				3	4	5				3	SALABLE	G4	
31404-9121	31404-9131		A	BLACK					4					1	SALABLE		
31404-9122	31404-9132		A	BLACK				3				7		2	SALABLE		
31404-9123	31404-9133		A	BLACK		1		3					8	3	SALABLE		
31404-9124	31404-9134		A	BLACK		1	2				6	7		4	SALABLE		
31404-9125	31404-9135		A	BLACK						5	6	7	8	4	SALABLE	G5	
31404-9126	31404-9136		A	BLACK		1	2	3	4		6	7		6	SALABLE		
31404-9127	31404-9137		A	BLACK					4	5		7		3	SALABLE	G6	
31404-9128	31404-9138		A	BLACK					4	5	6			3	SALABLE	G7	
31404-9129	31404-9139		A	BLACK						5		7		2	SALABLE	G7	
31404-9141	31404-9151		A	BLACK							6			1	SALABLE		
31404-9142	31404-9152		A	BLACK			2				6			2	SALABLE		
31404-9143	31404-9153		A	BLACK		1		3			6			3	SALABLE		
31404-9144	31404-9154		A	BLACK							6	7	8	3	SALABLE	G8 G9	
31404-9161	31404-9171		A	BLACK			2							1	SALABLE		
31404-9162	31404-9172		A	BLACK		1	2							2	SALABLE		
31404-9163	31404-9173		A	BLACK		1	2				6			3	SALABLE		
31404-9182	31404-9192		A	BLACK				3			6			2	SALABLE		
31404-9183	31404-9193		A	BLACK		1			4		6			3	SALABLE	G	
31404-9501	31404-9511		A	LT.GRAY				3						1	SALABLE		
31404-9502	31404-9512		A	BLACK						5	6			2	SALABLE		
31404-9503	31404-9513		A	BLACK		1	2		4					3	SALABLE		
31404-9522	31404-9532		A	BLACK					4			7		2	SALABLE		
31404-9523	31404-9533		A	BLACK		1	2	3						3	SALABLE		
31404-9542	31404-9552		A	BLACK			2	3						2	SALABLE		
31404-9543	31404-9553		A	BLACK			2	3			6			3	SALABLE		
31404-9562	31404-9572		A	BLACK					4	5				2	SALABLE		
31404-9563	31404-9573		A	BLACK			2	3				7		3	SALABLE		
31404-9583	31404-9593		A	BLACK				3				7	8	3	SALABLE		
31404-9584	31404-9594		A	BLACK	G2		2	3				7	8	4	SALABLE		
31404-9200	31404-9210		B	LT.GRAY										0	SALABLE	G3	
31404-9203	31404-9213		B	LT.GRAY	G2			3				7	8	3	SALABLE		
31404-9204	31404-9214		B	LT.GRAY	G2		2	3				7	8	4	SALABLE		
31404-9300	31404-9310		C	DK.GRAY										0	SALABLE		
31404-9400	31404-9410		D	TBD										0	NOT TOOL		
31404-9001	31404-9006		B	BLACK										0	SALABLE	G8	
31404-9002	31404-9007		C	BLACK										0	SALABLE	G8	
31404-9003	31404-9008		C	LT.GRAY										0	SALABLE	G8	
31404-9004	31404-9009		A	DK.GRAY										0	SALABLE	G8	
31404-9005	31404-9010		B	DK.GRAY										0	SALABLE	G8	
31404-9184	31404-9595		A	BLACK							6		8	2	SALABLE		
31404-9586	31404-9596		A	BLACK								7		1	SALABLE	G11	

NOTES: VALID UNLESS OTHERWISE SPECIFIED

1. GENERAL:
a. APPLICATION SPECIFICATION SEE: AS-31402-000
- DESIGNED TO MATE WITH DEVICE CONNECTION AS SPECIFIED IN USCAR INTERFACE DRAWING FOR SINGLE ROW SEALED 0.64 SYSTEMS. 064-S-008-1-Z02.
- ASSEMBLY SHIPPED WITH TPA IN PRE-SET POSITION (SEE SECTION Z-Z) UPON FULL TERMINAL ASSEMBLY, TPA MUST BE SNAPPED INTO ITS FINAL LOCK POSITION AFTER TERMINALS ARE ASSEMBLED (SEE SECTION Y-Y)
- TPA'S MAY BECOME SEATED DURING TRANSIT. IF THIS OCCURS, TPA'S SHOULD BE MOVED TO THE PRE-LOCKED POSITION PRIOR TO FEMALE TERMINAL INSTALLATION. REFERENCE PRODUCT SPECIFICATION: PS-34646-001.
- SYSTEM TO BE USED WITH WIRE WITHIN RANGE OF:
>SAE 22 AWG TO 18 AWG
>ISO 0.35MM² TO 0.75MM² PER GMW156256
>CABLE OUTSIDE DIAMETER: FROM 1.2MM TO1.9 MM
b. PRODUCT SPECIFICATION SEE: PS-31404-001
c. PACKAGING SPECIFICATION PER MOLEX DRAWING: PK-31300-256
d. PARTS MUST BE IN COMPLIANCE TO MOLEX CHEMICAL SUBSTANCES FOR PRODUCTS AND PACKAGING SPECIFICATION: ES-40000-5016
e. DATA MUST BE SUBMITTED UNDER THE MOLEX PART NUMBER TO IMDS (COMPANY ID#13255)

2. DESIGN - MATERIALS:
a. SEE BOM TABLE IN PAGE 2

3. DESIGN - GEOMETRY:
a. THIS IS A 100% CAD GENERATED PART. THE CAD MATHEMATICAL DATA IS THE MASTER FOR THIS PART. FOR DIMENSIONAL OR ANY INFORMATION
b. DATE CODE: FIRST TWO DIGITS ARE THE CALENDAR YEAR (EXAMPLE: 13 = 2013). THIRD THROUGH 5TH DIGIT DAY # OF THE CALENDAR YEAR (EXAMPLE: FEB. 3RD = '034').
c. VISUAL DEFECTS SHALL MEET COSMETIC STANDARD PS-45499-002 (Class B)

TABLE OF CONTENTS

SHEET NO.	SHEET DESCRIPTION
1	NOTE
2	BOM
3	KEY CONFIGURATION
4	WIRE DRESS COVER ASSEMBLY

PART NUMBER LEGEND
CONNECTOR ASSEMBLY
31404-9XXX

- 0 - ALL CIRCUITS OPEN
  1-9 - SEE CHART
- CPA OPTION
  0, 2, 4, 6 OR 8 WITHOUR CPA
  1, 3, 5, 7 OR 9 WITH CPA
- POLARIZATION OPTION
  1 OR 5- POLARIZATION A
  2 OR 6- POLARIZATION B
  3 OR 7- POLARIZATION C
  4 OR 8- POLARIZATION D

G12	REMOVE 31404-9585, ADD 31404-9184 BACK
G11	ADD P/N: 31404-9585/9595, 31404-9586/9596; Delete 31404-9184/9194
G10	ADD P/N: 31404-9184/9194
G9	UPDATE CONFIGURATION FOR P/N 31404-9144/9154
G8	ADD P/N: 31404-9001 TO 9010, 31404-9144/9154
G7	ADD P/N: 31404-9128/9138, 31404-9129/9139
G6	ADD P/N: 31404-9127/9137
G5	ADD P/N: 31404-9125/9135
G4	ADD P/N: 31404-9109/9119
G3	ADD P/N: 31404-9203/9213, DELETE OBSOLETE P/Ns (31404-8XXX)
G2	UPDATE COLOR DESCRIPTION
G1	ADD P/N: 31404-9107/9117, 31404-9108/9118
G	OBSOLETE P/N 31404-8XXX ADD NEW P/N 31404-9501/31404-9511
F	ADD P/N 31404-9583/9593, 31404-9584/9594 AND 31404-9204/9214 CHANGE STATUS FROM "TOOED" TO "SALABLE"
E6	CHANGE P/N 31401-9101 TO 31404-9101
E3	ADD P/N: 31404-8563/8573 AND 31404-9563/9573
E2	ADD P/N: 31404-8126/8136 AND 31404-9126/9136
E1	ADD P/N: 31404-8106/8116 AND 31404-9106/9116
E	ADD P/N:31404-9XXX BASED ON THE PRODUCT UPGRADE
D3	ADD P/N: 31404-8562, 31404-8572,
D2	ADD P/N: 31404-8161 AND 31404-8171 31404-8542 AND 31404-8552 AND MANUFACTURING LOCATION ID
D1	ADD P/N: 31404-8522 AND 31404-8532
D	ADD P/N: 31404-8502 AND 31404-8512
C2	UPDATE NOTE 1_a ADD TE TERMINAL IN THE LIST
C1	UPDATE TERMINAL AND WIRE INFORMATON
C	ADD WIRE DRESS CONVER P/N.
B	ADD P/N
A	INITIAL RELEASE SAP # 10647976
REV	REV DESCRIPTION

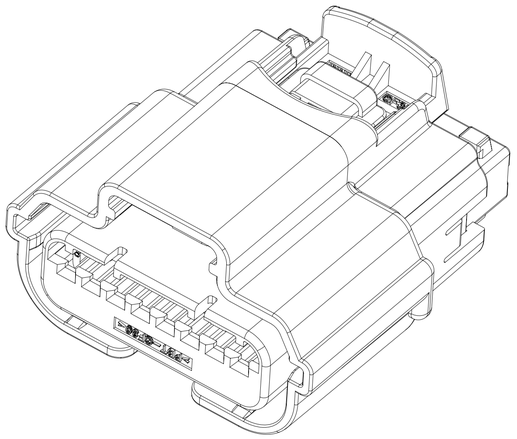

WITH CPA

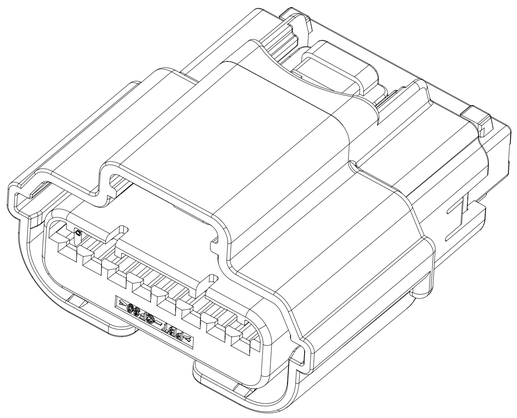

WITHOUT CPA

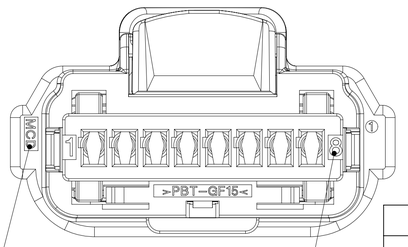

MANUFACTURING LOCATION ID

CIRCUIT ID

INSPECTION BALLOON NUMBER LOG
PER DRAWING REVISION: F
LAST BALLOON NUMBER USED: 4
ADDED BALLOON NUMBERS:
REMOVED BALLOON NUMBERS:

SYMBOLS
A = 0
C = 0
D = 0
S = 0
▼ = 0
C = 0
☒ = 0
■ = 0
= 0

DIMENSION UNITS	SCALE
mm	4:1

GENERAL TOLERANCES (UNLESS SPECIFIED)

ANGULAR TOL	±	0.5 °
4 PLACES	±	0
3 PLACES	±	0
2 PLACES	±	0
1 PLACE	±	0
0 PLACES	±	0

DRAFT WHERE APPLICABLE MUST REMAIN WITHIN DIMENSIONS

THIS DRAWING CONTAINS INFORMATION THAT IS PROPRIETARY TO MOLEX ELECTRONIC TECHNOLOGIES, LLC AND SHOULD NOT BE USED WITHOUT WRITTEN PERMISSION

CURRENT REV DESC:

EC NO: CO-000000853
DRWN: Yan Allen 15-Apr-2022
CHK'D: Fiona Chen 15-Apr-2022
APPR: Colin Zhang 20-Apr-2022

INITIAL REVISION:
DRWN: Yan Allen 14-Feb-2022
APPR: David Xie 24-Feb-2022

molex

USCAR 0.64MM 8 WAY
ADD NEW P/N: 314049184/9194

PRODUCT SALES DRAWING

DOCUMENT NUMBER	DOC TYPE	DOC PART	REVISION
SD-31404-811	PSD	001	G12

THIRD ANGLE PROJECTION	DRAWING	SERIES	MATERIAL NUMBER	CUSTOMER	SHEET NUMBER
	A1-SIZE	31404		GENERAL MARKET	1 OF 4

DOCUMENT STATUS	Approved	RELEASE DATE	20-Apr-2022 01:31:59

SHEET DESCRIPTION
BOM

ITEM NO.	DESCRIPTION	MATERIAL	COLOR
I	CPA	PBT-GF30	RED
II	CONNECTOR HOUSING	PBT-GF15	SEE SHEET
III	MATTE SEAL	INHERENTLY LUBRICATED SILICONE	DARK BLUE
IV	TERMINAL HOUSING	PBT-GF15	BLACK
V	PERIPHERAL SEAL	INHERENTLY LUBRICATED SILICONE	LIGHT BLUE
VI	TPA	PBT-GF30	NATURAL

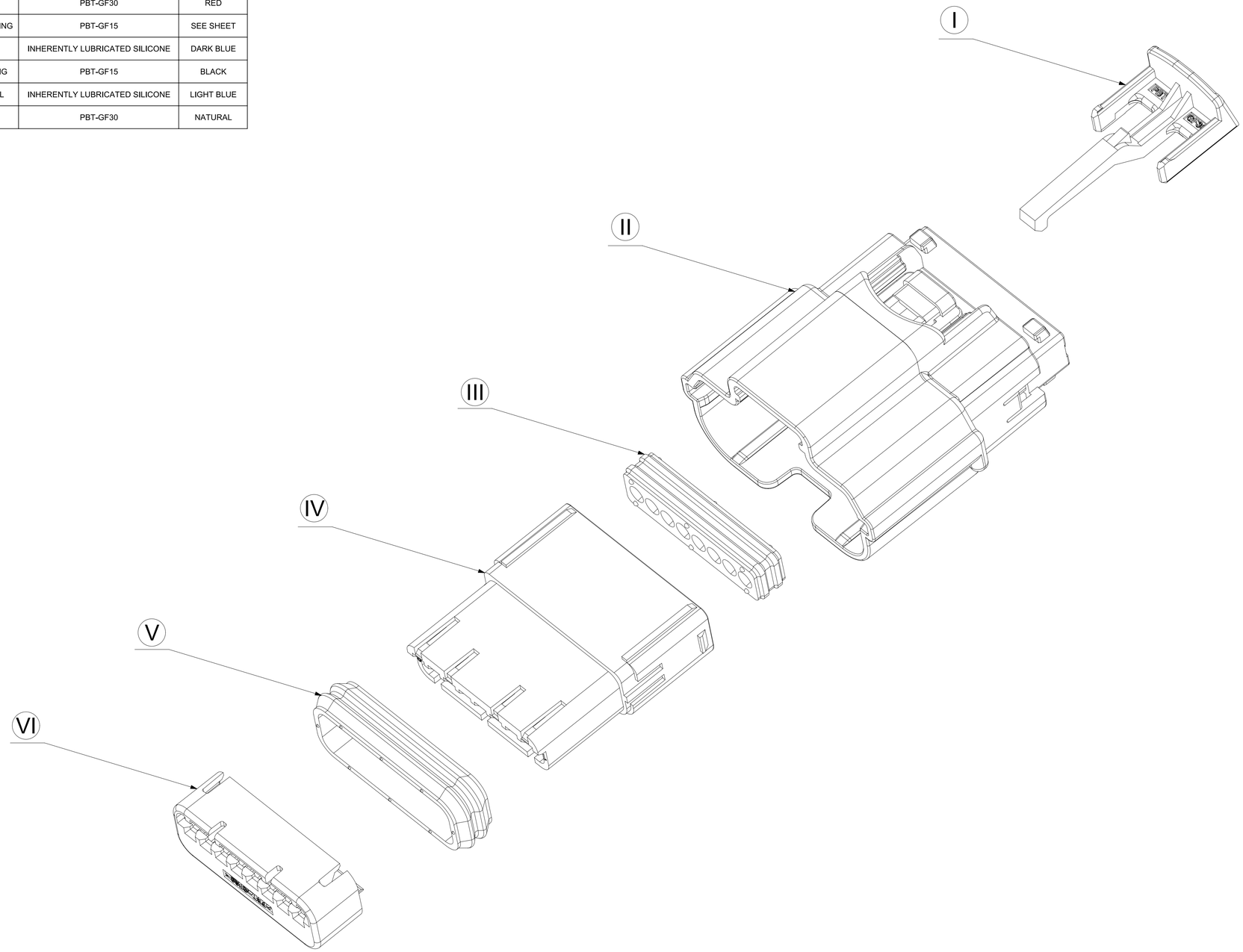

THIS DRAWING CONTAINS INFORMATION THAT IS PROPRIETARY TO MOLEX ELECTRONIC TECHNOLOGIES, LLC AND SHOULD NOT BE USED WITHOUT WRITTEN PERMISSION

SYMBOLS	
A	= 0
C	= 0
E	= 0
S	= 0
	= 0
C	= 0
	= 0
	= 0
V	= 0

DIMENSION UNITS	SCALE
mm	4:1

GENERAL TOLERANCES (UNLESS SPECIFIED)		
ANGULAR TOL	±	0.5 °
4 PLACES	±	0
3 PLACES	±	0
2 PLACES	±	0
1 PLACE	±	0
0 PLACES	±	0

DRAFT WHERE APPLICABLE MUST REMAIN WITHIN DIMENSIONS

CURRENT REV DESC:

EC NO: CO-000000853
DRWN: Yan Allen 15-Apr-2022
CHK'D: Fiona Chen 15-Apr-2022
APPR: Colin Zhang 20-Apr-2022

INITIAL REVISION:
DRWN: Yan Allen 14-Feb-2022
APPR: David Xie 24-Feb-2022

THIRD ANGLE PROJECTION

DRAWING	SERIES
A1-SIZE	31404

molex

USCAR 0.64MM 8 WAY
ADD NEW P/N: 314049184/9194

PRODUCT SALES DRAWING

DOCUMENT NUMBER	DOC TYPE	DOC PART	REVISION
SD-31404-811	PSD	001	G12

MATERIAL NUMBER	CUSTOMER	SHEET NUMBER
	GENERAL MARKET	2 OF 4

DOCUMENT STATUS	Approved	RELEASE DATE	20-Apr-2022 01:31:59

TEMPLATE: PSD01-001-01001
REVISION: H
DATE: 2016/01/19

SHEET DESCRIPTION
KEY CONFIGURATIONS

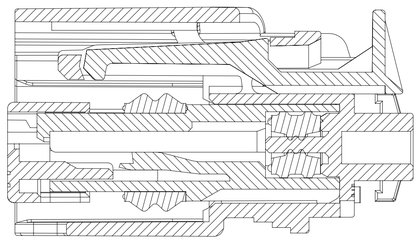

SECTION Z-Z
TPA SHOWN IN AS-SHIPPED
PRE-SET POSITION
SEE NOTE 1-a

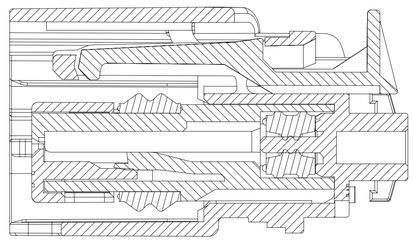

SECTION Y-Y
TPA SHOWN IN FINAL
LOCK POSITION POSTION
SEE NOTE 1-a

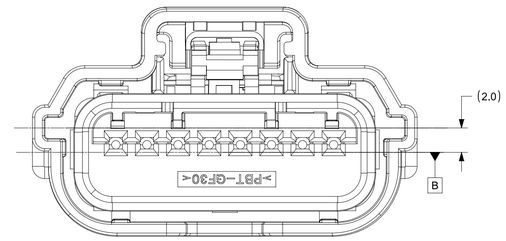

POLARIZATION A

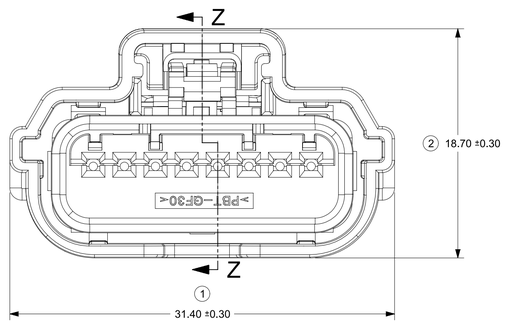

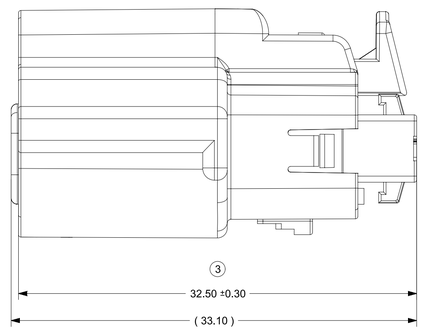

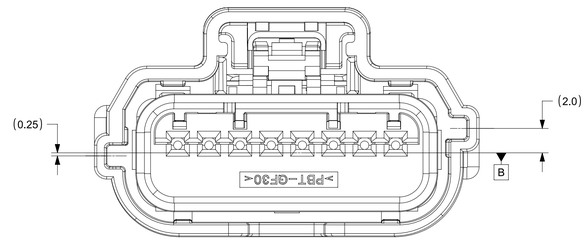

POLARIZATION B

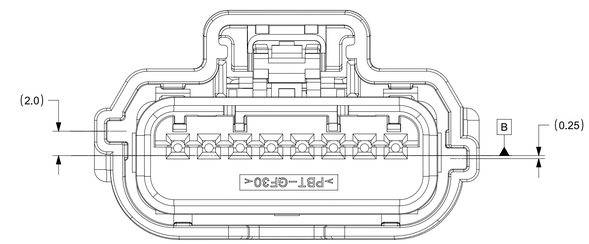

POLARIZATION C

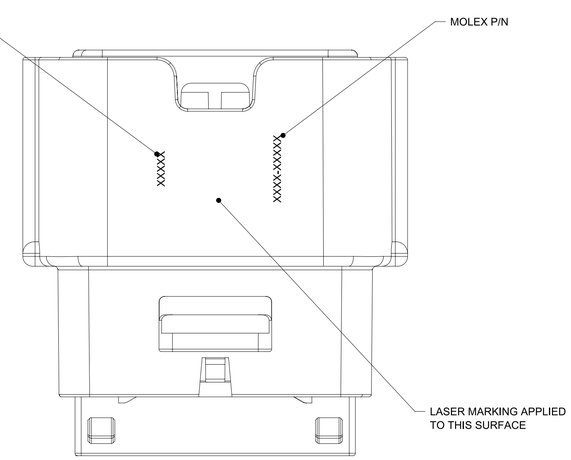

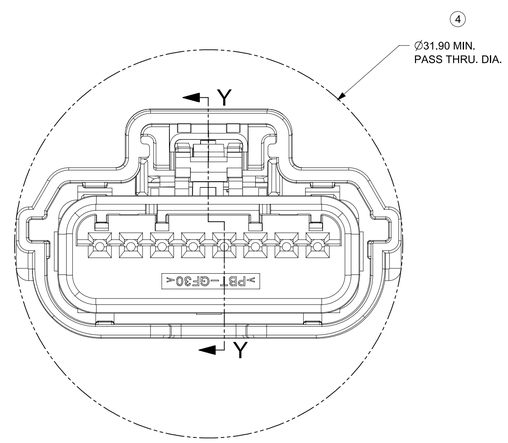

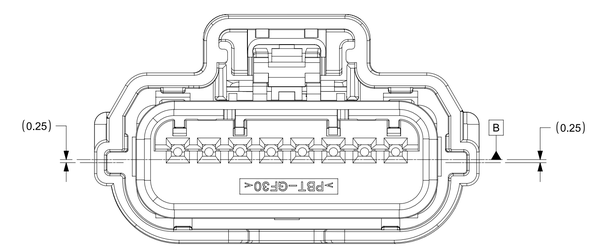

POLARIZATION D

SYMBOLS	
A = 0	
C = 0	
F = 0	
S = 0	
= 0	
C = 0	
= 0	
= 0	
= 0	

THIS DRAWING CONTAINS INFORMATION THAT IS PROPRIETARY TO MOLEX ELECTRONIC TECHNOLOGIES, LLC AND SHOULD NOT BE USED WITHOUT WRITTEN PERMISSION

DIMENSION UNITS	SCALE
mm	4:1

GENERAL TOLERANCES (UNLESS SPECIFIED)		
ANGULAR TOL	±	0.5 °
4 PLACES	±	0
3 PLACES	±	0
2 PLACES	±	0
1 PLACE	±	0
0 PLACES	±	0

DRAFT WHERE APPLICABLE MUST REMAIN WITHIN DIMENSIONS

CURRENT REV DESC:

EC NO: CO-000000853
DRWN: Yan Allen 15-Apr-2022
CHK'D: Fiona Chen 15-Apr-2022
APPR: Colin Zhang 20-Apr-2022

INITIAL REVISION:
DRWN: Yan Allen 14-Feb-2022
APPR: David Xie 24-Feb-2022

THIRD ANGLE PROJECTION | DRAWING: A1-SIZE | SERIES: 31404

molex

USCAR 0.64MM 8 WAY
ADD NEW P/N: 314049184/9194

PRODUCT SALES DRAWING

DOCUMENT NUMBER	DOC TYPE	DOC PART	REVISION
SD-31404-811	PSD	001	G12

MATERIAL NUMBER	CUSTOMER	SHEET NUMBER
	GENERAL MARKET	3 OF 4

DOCUMENT STATUS	Approved	RELEASE DATE	20-Apr-2022 01:31:59

COPYRIGHT - creative-depositphotos
DO NOT SCALE DRAWING
DATE: 2019/01/18

SHEET DESCRIPTION
WIRE DRESS COVER ASSEMBLY

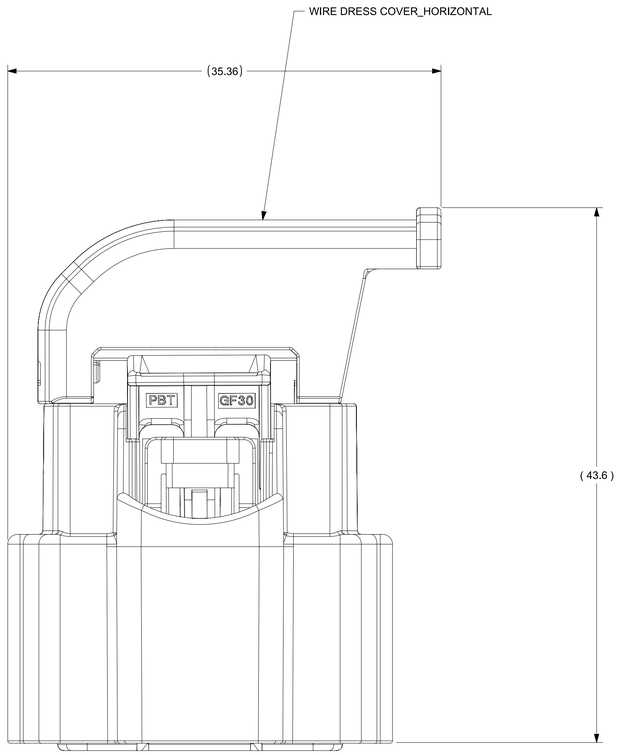

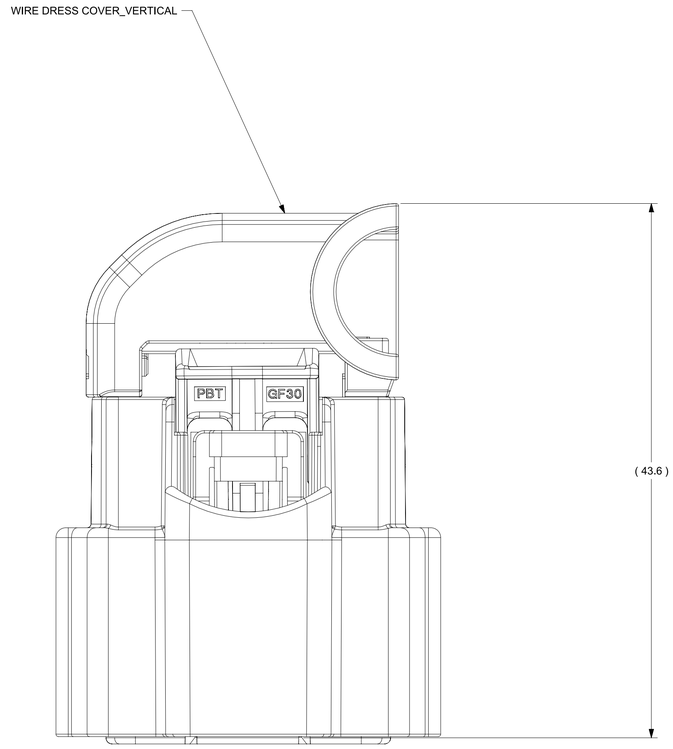

THIS DRAWING CONTAINS INFORMATION THAT IS PROPRIETARY TO MOLEX ELECTRONIC TECHNOLOGIES, LLC AND SHOULD NOT BE USED WITHOUT WRITTEN PERMISSION

SYMBOLS	DIMENSION UNITS	SCALE
= 0	mm	4:1
= 0	GENERAL TOLERANCES (UNLESS SPECIFIED)	
= 0	ANGULAR TOL	± 0.5 °
= 0	4 PLACES	± 0
= 0	3 PLACES	± 0
= 0	2 PLACES	± 0
= 0	1 PLACE	± 0
= 0	0 PLACES	± 0
= 0	DRAFT WHERE APPLICABLE MUST REMAIN WITHIN DIMENSIONS	

CURRENT REV DESC:

EC NO: CO-000000853
DRWN: Yan Allen 15-Apr-2022
CHK'D: Fiona Chen 15-Apr-2022
APPR: Colin Zhang 20-Apr-2022

INITIAL REVISION:
DRWN: Yan Allen 14-Feb-2022
APPR: David Xie 24-Feb-2022

molex

USCAR 0.64MM 8 WAY
ADD NEW P/N: 314049184/9194

PRODUCT SALES DRAWING

DOCUMENT NUMBER	DOC TYPE	DOC PART	REVISION
SD-31404-811	PSD	001	G12

THIRD ANGLE PROJECTION	DRAWING	SERIES	MATERIAL NUMBER	CUSTOMER	SHEET NUMBER
	A1-SIZE	31404		GENERAL MARKET	4 OF 4

DOCUMENT STATUS	Approved	RELEASE DATE	20-Apr-2022 01:31:59