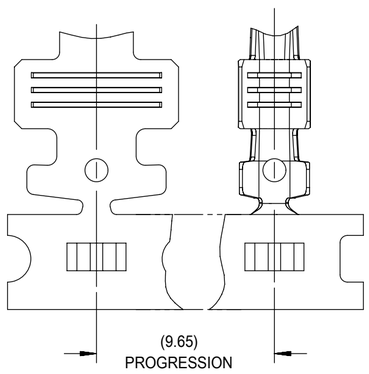

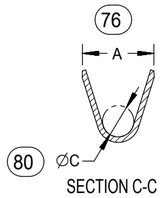

SECTION C-C

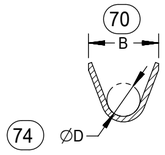

SECTION B-B

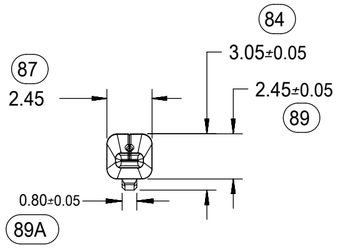

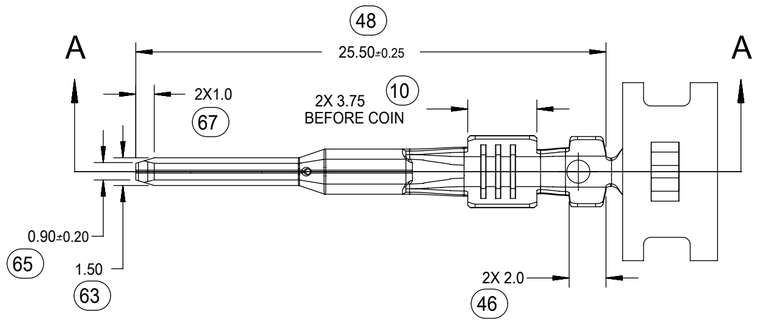

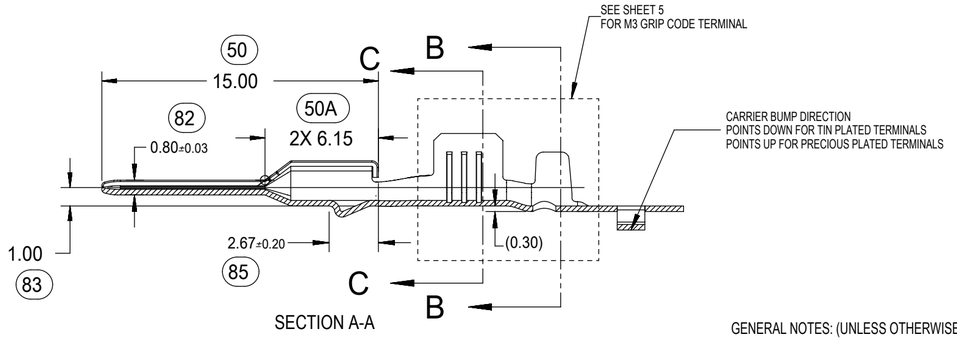

SECTION A-A

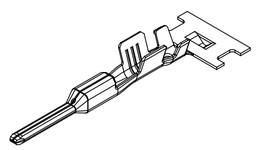

ISO VIEW
SCALE 2:1

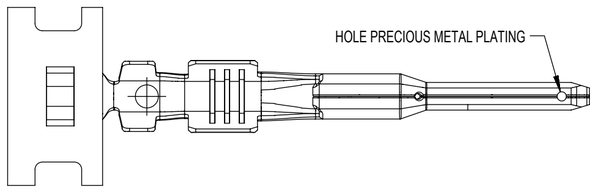

PRECIOUS METAL PLATED BLADE



TIN PLATED BLADE

GENERAL NOTES: (UNLESS OTHERWISE SPECIFIED)

1. MATING TERMINAL SHOWN ON SD-33012-002

2. MATERIAL: ASTM B422, UNS C19025, HR04
   THICKNESS: 0.30 mm ±0.01
   TEMPER: FULL HARD (REF)
   TENSILE: 496-572 MPA

3. TIN PLATED TERMINAL FINISH:
   OVERALL UNDERPLATE ELECTRODEPOSITED NICKEL
   OVERALL ELECTRODEPOSITED REFLOW TIN

4. GOLD PLATED TERMINAL FINISH
   OVERALL UNDERPLATE ELECTRODEPOSITED DUCTILE SULFAMATE NICKEL
   CONTACT AREA - ELECTRODEPOSITED GOLD
   GRIP AREA - ELECTRODEPOSITED 100% TIN MATTE FINISH

5. SILVER PLATED TERMINAL FINISH
   OVERALL UNDERPLATE ELECTRODEPOSITED DUCTILE SULFAMATE NICKEL
   CONTACT AREA - ELECTRODEPOSITED PURE SILVER (0.5% MAX IMPURITIES) SEMI-BRIGHT FINISH
   - SILVER ANTI-TARNISH : EVABRITE
   GRIP AREA - ELECTRODEPOSITED 100% TIN MATTE FINISH

6. MEETS CRIMP PERFORMANCE SPECIFICATION SAE/USCAR-21 (8/2001)

7. MEETS PERFORMANCE STANDARD FOR AUTOMOTIVE ELECTRICAL CONNECTOR SYSTEMS
   SAE/USCAR-2 REV 3 (APRIL 2001)

8. MEETS FIELD CORRELATED LIFE TEST SAE/USCAR-20 (11/2001)

9. MEETS WIRING COMPONENT DESIGN GUIDLINES SAE/USCAR-12 REV 2 (12/2001)

10. MEETS ELECTRICAL CONNECTION SYSTEM DESIGN SPECIFICATION (SDS) REV 11 (5/2002)

11. REFERENCE PK-31300-516 FOR REEL DIRECTION

12. REFERENCE AS-33000-001 FOR CRIMP INFORMATION

DOCUMENT STATUS	P1	RELEASE DATE	2020/03/06 02:34:08

THIS DRAWING CONTAINS INFORMATION THAT IS PROPRIETARY TO MOLEX ELECTRONIC TECHNOLOGIES, LLC AND SHOULD NOT BE USED WITHOUT WRITTEN PERMISSION

SYMBOLS	DIMENSION UNITS	SCALE
FA = 0	mm	4:1
FC = 0	GENERAL TOLERANCES (UNLESS SPECIFIED)	
FB = 0	ANGULAR TOL ± 3.0 °	
S = 0	4 PLACES ±	
= 0	3 PLACES ±	
C = 0	2 PLACES ± 0.10	
= 0	1 PLACE ± 0.3	
= 0	0 PLACES ±	
= 0	DRAFT WHERE APPLICABLE MUST REMAIN WITHIN DIMENSIONS	

CURRENT REV DESC:

EC NO: 631014
DRWN: NVENKATESHSH 2019/05/11
CHK'D: ADHIR 2020/03/06
APPR: ADHIR 2020/03/06

INITIAL REVISION:
DRWN: LPULLIAM 2006/01/31
APPR: bmoser 2006/02/02

THIRD ANGLE PROJECTION | DRAWING: C-SIZE | SERIES: 33000

molex

MX150 1.5MM BLADE TERMINAL

PRODUCT CUSTOMER DRAWING

DOCUMENT NUMBER	DOC TYPE	DOC PART	REVISION
SD-33000-001	PSD	001	D2

MATERIAL NUMBER	CUSTOMER	SHEET NUMBER
SEE TABLE	GENERAL MARKET	1 OF 5

FORMAT: master-tb-prod-C
REVISION: H
DATE: 2018/01/18

FAMILY	GENDER	SEALING	PLATING	PART NUMBER	PAYOFF DIRECTION	GRIP CODE	WIRE SIZES*	A ±0.30	B ±0.30	C ±0.30	D ±0.30	SPECIAL CHARACTERISTICS
MX150	BLADE	MAT SEAL UNSEALED	Sn	33000-0001	RIGHT (B)	14	14AWG 1.50-2.00mm²	3.9	3.8	1.7	1.6	HIGH PERFORMANCE Sn
				33000-1001	LEFT (D)							
				33000-0002	RIGHT (B)	18	20/18/16AWG 0.75-1.25mm²	3.3	3.1	1.3	1.4	
				33000-1002	LEFT (D)							
				33000-0003	RIGHT (B)	22	22AWG	2.5	2.6	0.9	1.0	
				33000-1003	LEFT (D)							
				33000-0004	RIGHT (B)	M3	0.35-0.50mm²	2.5	2.7	0.9	1.54 ±0.1	
				33000-1004	LEFT (D)							
			Au	33011-1002	RIGHT (B)	14	14AWG 1.50-2.00mm²	3.9	3.8	1.7	1.6	HIGH PERFORMANCE Au
				33011-0002	LEFT (D)							
				33011-1004	RIGHT (B)	18	20/18/16AWG 0.75-1.25mm²	3.3	3.1	1.3	1.4	
				33011-0004	LEFT (D)							
				33011-1006	RIGHT (B)	22	22AWG	2.5	2.6	0.9	1.0	
				33011-0006	LEFT (D)							
				33011-1008	RIGHT (B)	M3	0.35-0.50mm²	2.5	2.7	0.9	1.54 ±0.1	
				33011-0008	LEFT (D)							
			Ag	33011-2003	RIGHT (B)	14	14AWG 1.50-2.00mm²	3.9	3.8	1.7	1.6	HIGH PERFORMANCE Ag
				33011-3003	LEFT (D)							
				33011-2002	RIGHT (B)	18	20/18/16AWG 0.75-1.25mm²	3.3	3.1	1.3	1.4	
				33011-3002	LEFT (D)							
				33011-2001	RIGHT (B)	22	22AWG	2.5	2.6	0.9	1.0	
				33011-3001	LEFT (D)							
				33011-2004	RIGHT (B)	M3	0.35-0.50mm²	2.5	2.7	0.9	1.54 ±0.1	
				33011-3004	LEFT (D)							

* REFERENCE AS-33000-001 FOR SPECIFIC WIRE TYPES

SYMBOLS
FA = 0
FC = 0
FD = 0
S = 0
= 0
C = 0
= 0
= 0
= 0

THIS DRAWING CONTAINS INFORMATION THAT IS PROPRIETARY TO MOLEX ELECTRONIC TECHNOLOGIES, LLC AND SHOULD NOT BE USED WITHOUT WRITTEN PERMISSION

DIMENSION UNITS: mm
SCALE:
GENERAL TOLERANCES (UNLESS SPECIFIED)
ANGULAR TOL ± 3.0 °
4 PLACES ±
3 PLACES ±
2 PLACES ± 0.10
1 PLACE ± 0.3
0 PLACES ±
DRAFT WHERE APPLICABLE MUST REMAIN WITHIN DIMENSIONS

CURRENT REV DESC:

EC NO: 631014
DRWN: NVENKATESHSH 2019/05/11
CHK'D: ADHIR 2020/03/06
APPR: ADHIR 2020/03/06

INITIAL REVISION:
DRWN: LPULLIAM 2006/01/31
APPR: bmoser 2006/02/02

THIRD ANGLE PROJECTION | DRAWING: C-SIZE | SERIES: 33000

molex

MX150 1.5MM BLADE TERMINAL

PRODUCT CUSTOMER DRAWING

DOCUMENT NUMBER	DOC TYPE	DOC PART	REVISION
SD-33000-001	PSD	001	D2

MATERIAL NUMBER	CUSTOMER	SHEET NUMBER
SEE TABLE	GENERAL MARKET	2 OF 5

DOCUMENT STATUS	P1	RELEASE DATE	2020/03/06 02:34:08

FORMAT: master-tb-prod-C
REVISION: H
DATE: 2018/01/18

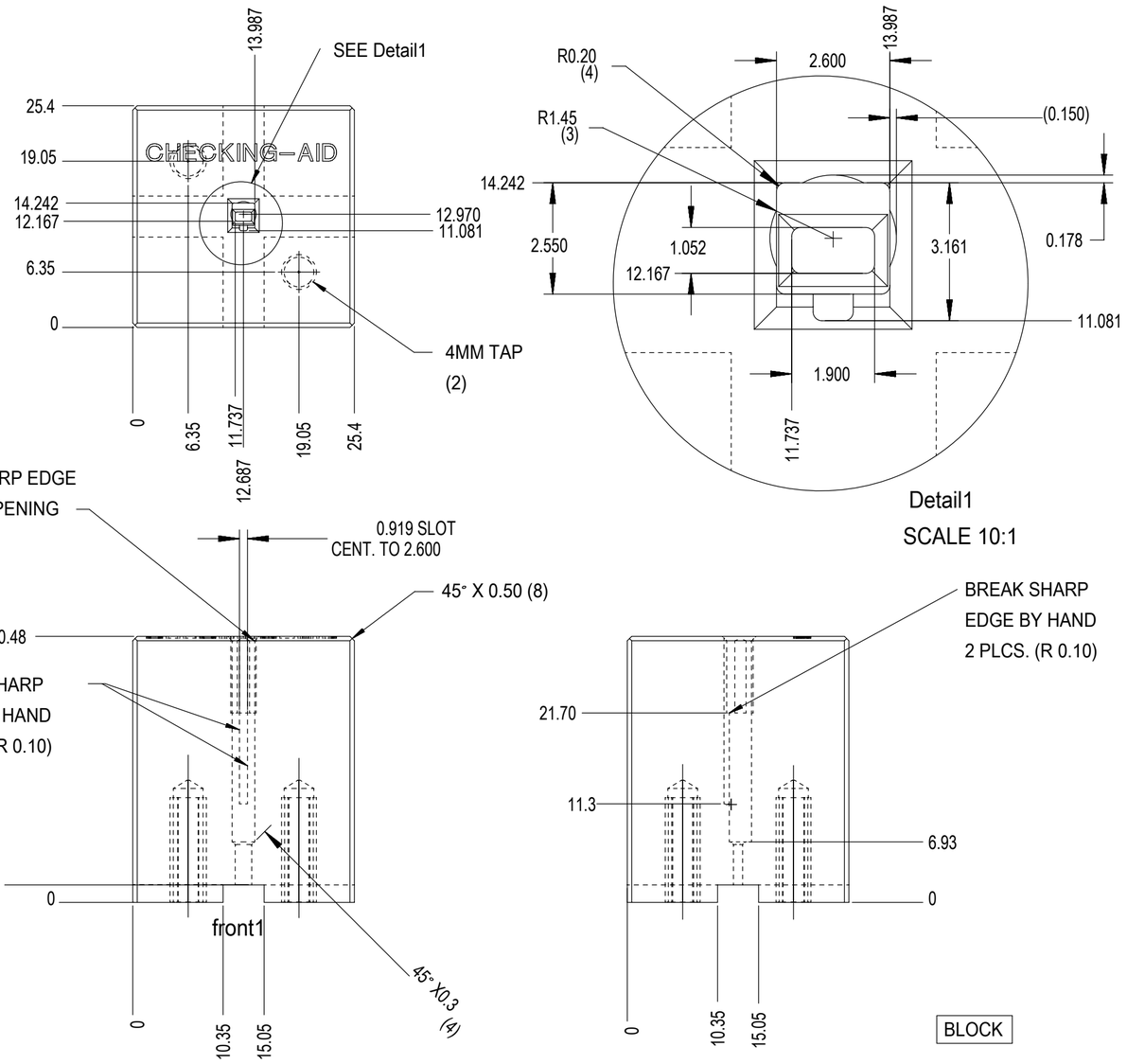

Detail1
SCALE 10:1

BLOCK

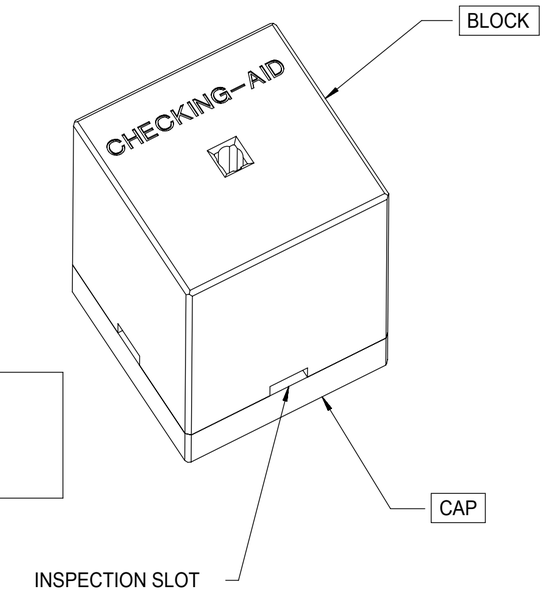

CHECKING-AID
2 PIECE ASM. A2 TOOL STEEL
HARDEN & GRIND TO A ROCKWELL
HARDNESS "C" SCALE OF 56-58

CHECKING AID TOLERANCE
.XXX = .005
.XX = .03
.X = .3

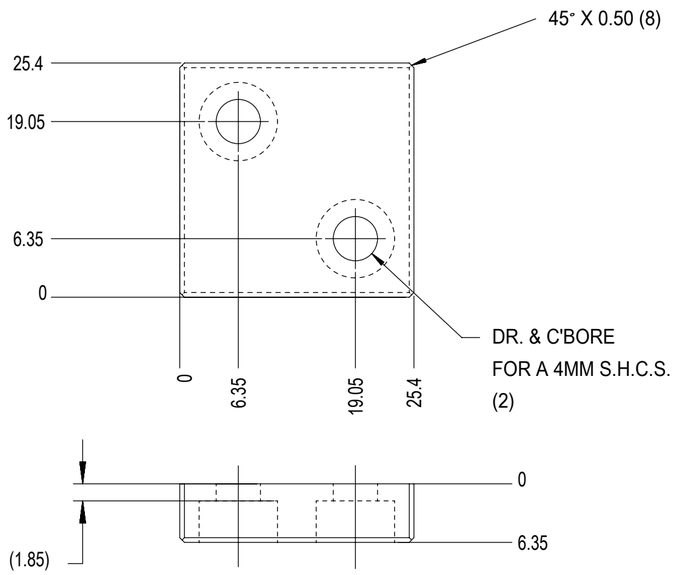

CAP

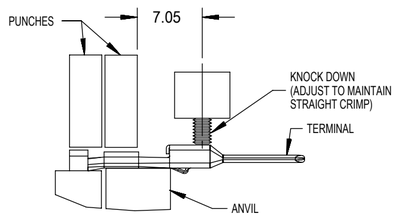

CRIMP TOOLING
SCALE 2:1

CRIMP REQUIREMENTS:

1. CRIMP STRAIGHTNESS MUST BE MAINTAINED.
   USE A KNOCKDOWN TOOL LOCATED AS SHOWN.
   TERMINAL BOX MUST NOT BE DEFORMED

2. AFTER CRIMPING, THE TERMINAL AND WIRE MUST FIT FREELY
   INTO THE CHECKING AID 33000-700. PROPER INSERTION
   DEPTH IS MET WHEN BLADE TIP STOPS ON CAP. SLOTS PROVIDED
   TO VISUALLY INSPECT STOPAGE OF PIN TIP.

3. FOR OTHER MECHANICAL REQUIREMENTS ON CRIMPED TERMINALS,
   REFER TO SAE/USCAR-21 (5-13-02) SECTIONS 4.2
   (VISUAL INSPECTION), 4.3 (CROSS SECTION ANALYSIS)
   AND 4.4 (CONDUCTOR CRIMP PULLOUT FORCE)

SYMBOLS	DIMENSION UNITS	SCALE
A = 0	mm	2:1
C = 0	GENERAL TOLERANCES (UNLESS SPECIFIED)	
B = 0	ANGULAR TOL ± 3.0 °	
S = 0	4 PLACES ±	
▼ = 0	3 PLACES ±	
C = 0	2 PLACES ± 0.10	
☒ = 0	1 PLACE ± 0.3	
■ = 0	0 PLACES ±	
V = 0	DRAFT WHERE APPLICABLE MUST REMAIN WITHIN DIMENSIONS	

THIS DRAWING CONTAINS INFORMATION THAT IS PROPRIETARY TO MOLEX ELECTRONIC TECHNOLOGIES, LLC AND SHOULD NOT BE USED WITHOUT WRITTEN PERMISSION

CURRENT REV DESC:

EC NO: 631014
DRWN: NVENKATESHSH 2019/05/11
CHK'D: ADHIR 2020/03/06
APPR: ADHIR 2020/03/06

INITIAL REVISION:
DRWN: LPULLIAM 2006/01/31
APPR: bmoser 2006/02/02

THIRD ANGLE PROJECTION | DRAWING: C-SIZE | SERIES: 33000

molex

MX150 1.5MM BLADE TERMINAL

PRODUCT CUSTOMER DRAWING

DOCUMENT NUMBER	DOC TYPE	DOC PART	REVISION
SD-33000-001	PSD	001	D2

MATERIAL NUMBER	CUSTOMER	SHEET NUMBER
SEE TABLE	GENERAL MARKET	3 OF 5

DOCUMENT STATUS	P1	RELEASE DATE	2020/03/06 02:34:08

FORMAT: master-tb-prod-C
REVISION: H
DATE: 20180118

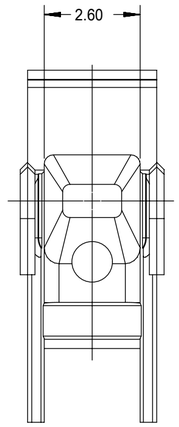

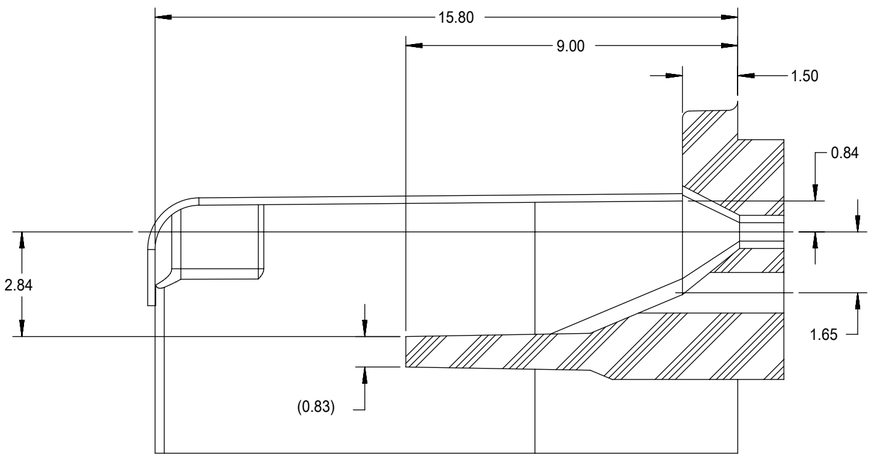

SECTION D-D

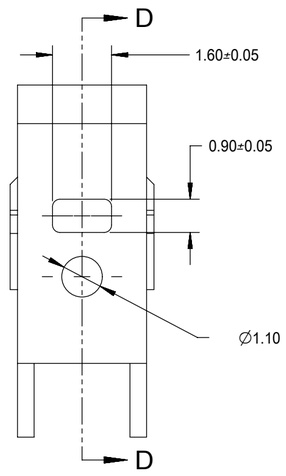

TPA/INSERT DETAIL

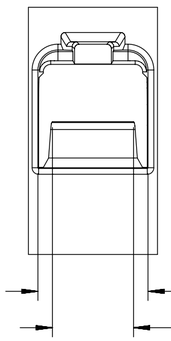

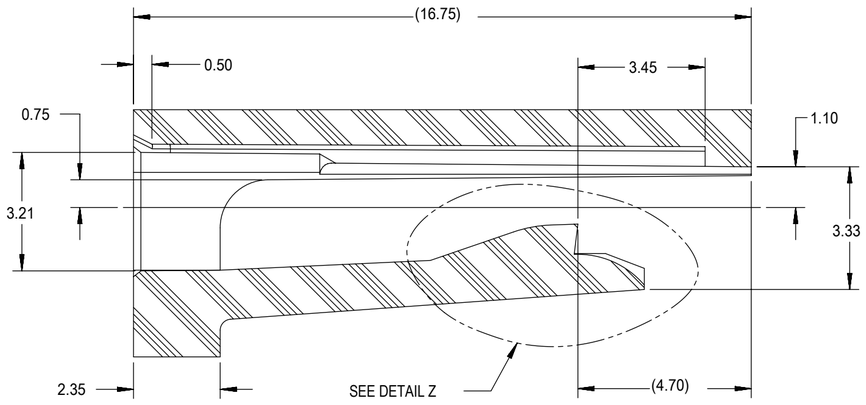

SECTION E-E

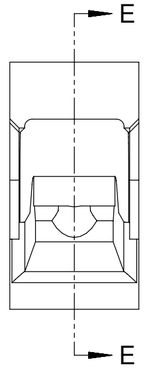

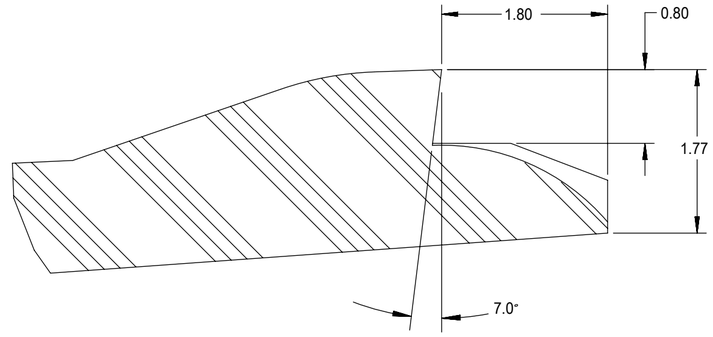

DETAIL Z
SCALE 20:1

HOUSING DETAIL

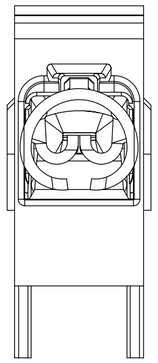

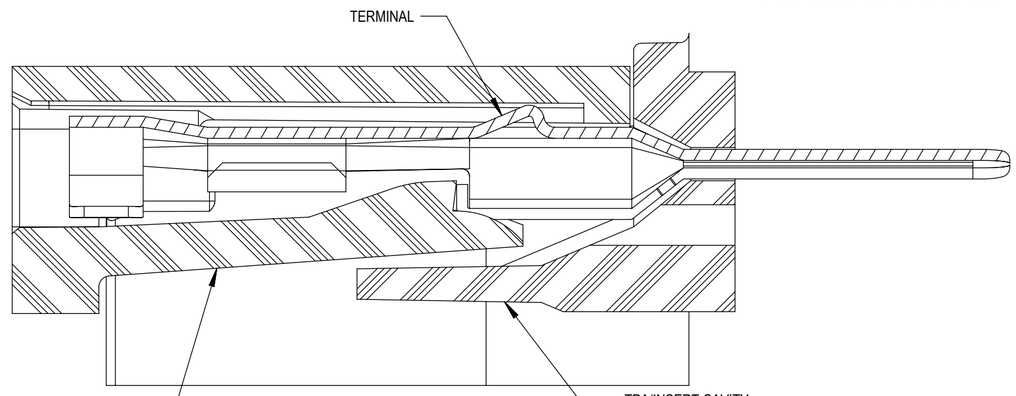

SECTION F-F

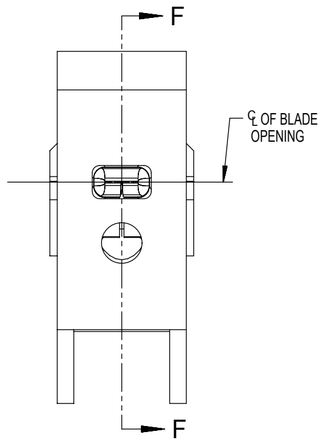

NOTES: (UNLESS OTHERWISE SPECIFIED)

1. TOLERANCES: LINEAR ±0.10
   ANGULAR 3°
2. ALL DRAFT WITHIN TOLERANCE
3. MAX RADII ON ALL CORNERS SHOWN SHARP: 0.10
4. MAX FLASH PERMISSIBLE: 0.1
5. EJECTOR PIN MARKS PERMISSIBLE IF FLUSH TO 0.25 BELOW SURFACE
6. MATERIAL: HOUSING/FINGER SPECIFICATION ENGINEERED FOR MATERIAL WITH THE FOLLOWING PROPERTIES:
   A. FLEXURAL MODULUS = 4,500 TO 9,400 MPa PER ASTM TEST D790
   B. ELONGATION AT YIELD = 2.3% OR BETTER PER ASTM TEST D638 TYPE V
7. CAVITY SPEC FOR USE ONLY WITH MOLEX BLADE TERMINAL PART NUMBERS (EXCEPT P/N'S FOR UNSEALED APPLICATIONS) SPECIFIED ELSEWHERE ON THIS DRAWING

BLADE CAVITY ASSEMBLY VIEWS

DOCUMENT STATUS	P1	RELEASE DATE	2020/03/06 02:34:08		

THIS DRAWING CONTAINS INFORMATION THAT IS PROPRIETARY TO MOLEX ELECTRONIC TECHNOLOGIES, LLC AND SHOULD NOT BE USED WITHOUT WRITTEN PERMISSION

SYMBOLS
FA = 0
FC = 0
FP = 0
S = 0
▼ = 0
C = 0
☒ = 0
■ = 0
▽ = 0

DIMENSION UNITS: mm
SCALE:

GENERAL TOLERANCES (UNLESS SPECIFIED)

ANGULAR TOL	±	3.0 °
4 PLACES	±	
3 PLACES	±	
2 PLACES	±	0.10
1 PLACE	±	0.3
0 PLACES	±	

DRAFT WHERE APPLICABLE MUST REMAIN WITHIN DIMENSIONS

CURRENT REV DESC:

EC NO: 631014
DRWN: NVENKATESHSH 2019/05/11
CHK'D: ADHIR 2020/03/06
APPR: ADHIR 2020/03/06

INITIAL REVISION:
DRWN: LPULLIAM 2006/01/31
APPR: bmoser 2006/02/02

THIRD ANGLE PROJECTION | DRAWING: C-SIZE | SERIES: 33000

molex

MX150 1.5MM BLADE TERMINAL

PRODUCT CUSTOMER DRAWING

DOCUMENT NUMBER	DOC TYPE	DOC PART	REVISION
SD-33000-001	PSD	001	D2

MATERIAL NUMBER	CUSTOMER	SHEET NUMBER
SEE TABLE	GENERAL MARKET	4 OF 5

FORMAT: master-tb-prod-C
REVISION: H
DATE: 2018/01/18

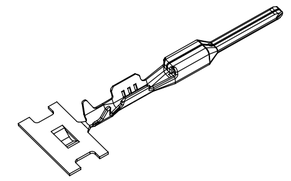

ISO VIEW
SCALE 2:1

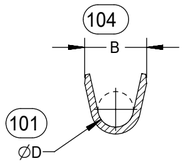

SECTION BB-BB

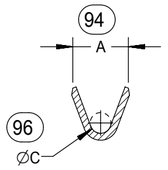

SECTION CC-CC

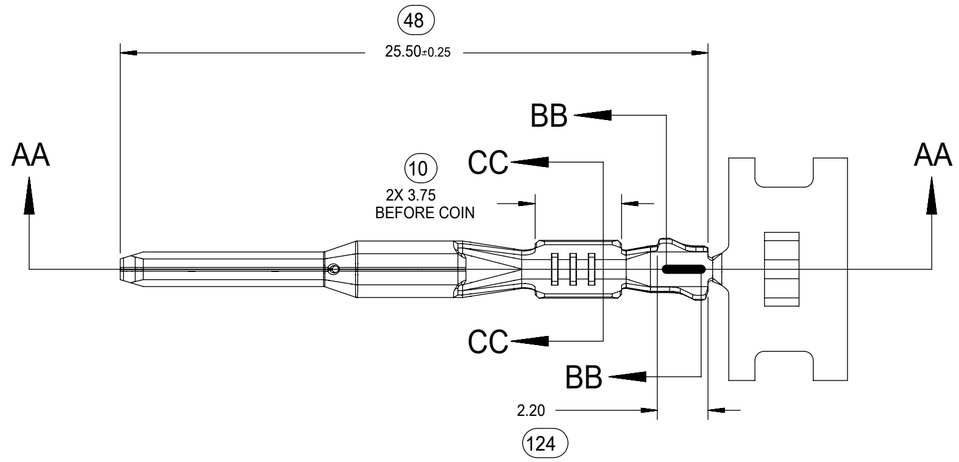

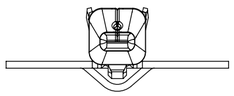

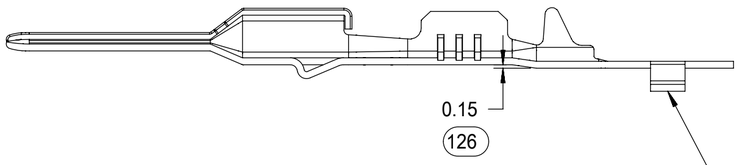

SECTION AA-AA
M3 GRIP CODE TERMINAL
SEE TABLE (SHEET 2) FOR PART NUMBERS

CARRIER BUMP DIRECTION
POINTS DOWN FOR TIN PLATED TERMINALS
POINTS UP FOR PRECIOUS METAL PLATED TERMINALS

SYMBOLS			
FA = 0			
FC = 0			
FP = 0			
S = 0			
▼ = 0			
C = 0			
☒ = 0			
■ = 0			
V = 0			

THIS DRAWING CONTAINS INFORMATION THAT IS PROPRIETARY TO MOLEX ELECTRONIC TECHNOLOGIES, LLC AND SHOULD NOT BE USED WITHOUT WRITTEN PERMISSION

DIMENSION UNITS	SCALE
mm	5:1

GENERAL TOLERANCES (UNLESS SPECIFIED)

ANGULAR TOL	±	3.0 °
4 PLACES	±	
3 PLACES	±	
2 PLACES	±	0.10
1 PLACE	±	0.3
0 PLACES	±	

DRAFT WHERE APPLICABLE MUST REMAIN WITHIN DIMENSIONS

CURRENT REV DESC:

EC NO:	631014	
DRWN:	NVENKATESHSH	2019/05/11
CHK'D:	ADHIR	2020/03/06
APPR:	ADHIR	2020/03/06

INITIAL REVISION:

DRWN:	LPULLIAM	2006/01/31
APPR:	bmoser	2006/02/02

THIRD ANGLE PROJECTION

DRAWING	SERIES
C-SIZE	33000

molex

MX150 1.5MM BLADE TERMINAL

PRODUCT CUSTOMER DRAWING

DOCUMENT NUMBER	DOC TYPE	DOC PART	REVISION
SD-33000-001	PSD	001	D2

MATERIAL NUMBER	CUSTOMER	SHEET NUMBER
SEE TABLE	GENERAL MARKET	5 OF 5

DOCUMENT STATUS	P1	RELEASE DATE	2020/03/06	02:34:08

FORMAT: master-tb-prod-C
REVISION: H
DATE: 2018/01/18

TABLE OF CONTENTS	
SHEET NO.	SHEET DESCRIPTION
1	NOTES AND BOM
2	CONFIGURATIONS
3-4	KEY CONFIGURATIONS
5	BLADE SEALED ASSEMBLY
6	SYSTEM PACKAGING
7	BACKSHELL NOTES
8	BACKSHELL
9	BACKSHELL CONFIGURATIONS

NOTES: VALID UNLESS OTHERWISE SPECIFIED

1. GENERAL:
a. APPLICATION SPECIFICATION SEE: AS-33472-100
-CONTAINS: PRODUCT INTRODUCTION, PRODUCT SUMMARY, CONNECTOR ASSEMBLY, PACKAGING INFORMATION, CONNECTOR MATING, SERVICE INSTRUCTIONS, ELECTRICAL CONTINUITY CHECKING, CRIMPING, AND TROUBLESHOOTING.
-DESIGNED TO MATE WITH RECEPTACLE SEALED ASSEMBLY AS SPECIFIED IN THE MATING CONNECTOR DRAWINGS CHART.
*DENOTES DRAWINGS THAT CAN BE ACCESSED AT http://ewcap.uscarteams.org/
-ASSEMBLY SHIPPED WITH PLR IN PRE-LOCK POSITION (SEE PLR PRE-LOCK VIEW SHEET 5).

b. PRODUCT SPECIFICATION SEE:
-STANDARD CONFIGURATION: PS-33471-000
-UL V0 CONFIGURATION: PS-160105-0001
CONTAINS: PRODUCT INTRODUCTION, PRODUCT SUMMARY, RATINGS (CURRENT, TEMPERATURE, SEALING, AND FLAMMABILITY), TERMINALS, WIRE DIAMETER RANGE, PRODUCT VALIDATION, AND PRODUCT DEVIATIONS.
c. PACKAGING SPECIFICATION PER MOLEX DRAWING: PK-31300-635 (PK-33471-000 FOR 1X5)
d. PARTS MUST BE IN COMPLIANCE TO MOLEX CHEMICAL SUBSTANCES FOR PRODUCTS AND PACKAGING SPECIFICATION: QEHS-699000-300
e. DATA MUST BE SUBMITTED UNDER THE MOLEX PART NUMBER TO IMDS (COMPANY ID#13255)

2. DESIGN - MATERIALS:
a. FOR BILL OF MATERIALS SEE:
-STANDARD CONFIGURATION: SD-33481-0002
-UL V0 CONFIGURATION: SD-160106-0002

3. DESIGN - GEOMETRY:
a. THE 3-D CAD DATA IS BASIC (WITHOUT TOLERANCE) AND MASTER FOR THIS PART WITH THE EXCEPTION OF UNDERLINED DIMENSIONS. DIMENSIONAL INFORMATION NOT SHOWN ON THIS DRAWING IS DEFINED BY THE DATA FILE AT ITS LATEST REVISION.
b. GEOMETRIC DIMENSIONS AND TOLERANCES PER ASME Y14.5M-2009
c. EDGES AND UNDIMENSIONED DETAILS PER ISO13715
d. CORNERS SHOWN AS SHARP TO BE R 0.2 MAX.
e. LETTERING SHALL BE 0.15 MAX RAISED IN 0.25 MAX RECESS PAD. THIS INCLUDES RECYCLING CODE, CAVITY ID, VENDOR IDENTIFICATION, AND CUSTOMER MATERIAL NUMBER.
f. VISUAL DEFECTS SHALL MEET COSMETIC STANDARD PS-45499-002 (Class B).
g. LASER MARKING:
1. PART NUMBER
2. DAY OF THE YEAR
3. SHIFT
4. YEAR
FOR ADDITIONAL INFORMATION SEE SECTION 5 UNDER PROCEDURES IN ES-34735-008.

MATING CONNECTOR DRAWINGS	
DESCRIPTION	MOLEX INLINE
1X2	SD-33471-0001
1X6	SD-33471-0001

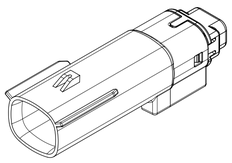

1X2

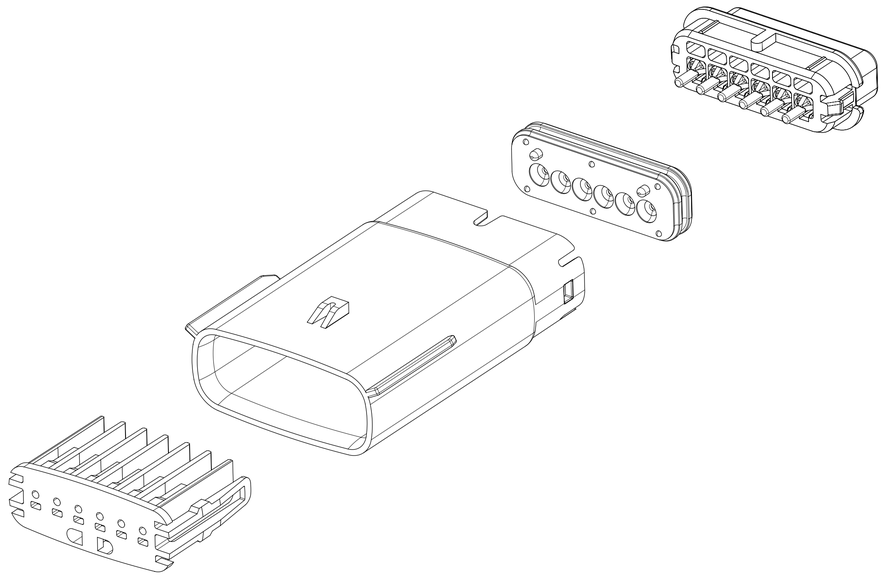

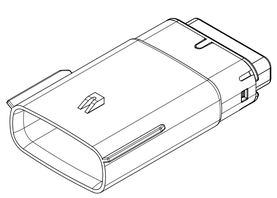

1X6

INSPECTION NUMBER LOG
LAST NUMBER: 9
ADDED:
REMOVED:

REV	REV DESCRIPTION
A1	NX REMASTERING , CHANGE PS DRAWING NUMBER FROM PS-160105-0001 TO PS-160074-0001 IN NOTES 1.b
A	MINOR GEOMETRY CHANGE FOR UL V0
2	UPDATED VIEWSETS
1	INITIAL RELEASE

SYMBOLS	
F/A =	0
F/C =	0
F/P =	0
S =	0
=	0
C =	0
=	0
=	0
=	0

DIMENSION UNITS	SCALE
MM ONLY	1.5:1

GENERAL TOLERANCES (UNLESS SPECIFIED)	
ANGULAR TOL	± 1.0 °
4 PLACES	±
3 PLACES	±
2 PLACES	± 0.1
1 PLACE	± 0.2
0 PLACES	±

DRAFT WHERE APPLICABLE MUST REMAIN WITHIN DIMENSIONS

THIS DRAWING CONTAINS INFORMATION THAT IS PROPRIETARY TO MOLEX ELECTRONIC TECHNOLOGIES, LLC AND SHOULD NOT BE USED WITHOUT WRITTEN PERMISSION

CURRENT REV DESC:

EC NO: 602373
DRWN: DSHETTY01 2018/05/25
CHK'D: MVANSLAMBROU 2018/10/04
APPR: MVANSLAMBROU 2018/10/04

INITIAL REVISION:
DRWN: APROFFITT 2015/07/21
APPR: KDEKOSKI 2016/06/14

molex

MX150 BLADE
SINGLE ROW SEALED ASSY MAT SEAL

PRODUCT CUSTOMER DRAWING

DOCUMENT NUMBER	DOC TYPE	DOC PART	REVISION
SD-33481-0001	PSD	001	A1

THIRD ANGLE PROJECTION	DRAWING	SERIES	MATERIAL NUMBER	CUSTOMER	SHEET NUMBER
	A1-SIZE	33481	SEE NOTE 2a.	GENERAL MARKET	1 OF 9

DOCUMENT STATUS	P1	RELEASE DATE	2018/10/04 15:02:02

FORMAT: master-fit-print-A1
DRAWN: dshetty01
DATE: 2018/07/16

SHEET DESCRIPTION

CONFIGURATIONS

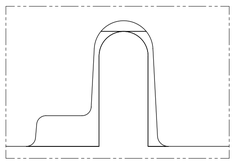

UL V0 UNIQUE FEATURE
Partial1
SCALE 10:1

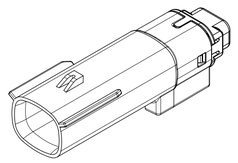

1x2 - STD

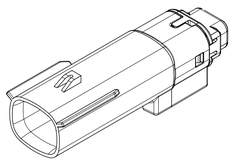

1X2 - UL V0*

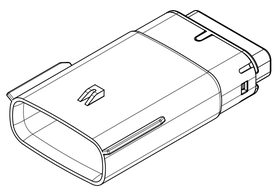

1x6 - STD

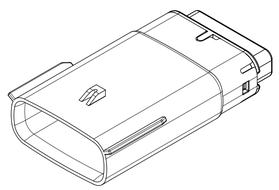

1x6 - UL V0*

* MINOR GEOMETRY DIFFERENCE THAN STANDARD CONFIGURATION.
SEE NOTES 1 & 2 FOR MORE INFORMATION

SYMBOLS	
FA	= 0
FC	= 0
FD	= 0
S	= 0
▼	= 0
C	= 0
☒	= 0
■	= 0
C	= 0

THIS DRAWING CONTAINS INFORMATION THAT IS PROPRIETARY TO MOLEX ELECTRONIC TECHNOLOGIES, LLC AND SHOULD NOT BE USED WITHOUT WRITTEN PERMISSION

DIMENSION UNITS	SCALE
MM ONLY	1.5:1

GENERAL TOLERANCES (UNLESS SPECIFIED)

ANGULAR TOL	±	1.0 °
4 PLACES	±	
3 PLACES	±	
2 PLACES	±	0.1
1 PLACE	±	0.2
0 PLACES	±	

DRAFT WHERE APPLICABLE MUST REMAIN WITHIN DIMENSIONS

CURRENT REV DESC:

EC NO:	602373	
DRWN:	DSHETTY01	2018/05/25
CHK'D:	MVANSLAMBROU	2018/10/04
APPR:	MVANSLAMBROU	2018/10/04

INITIAL REVISION:

DRWN:	APROFFITT	2015/07/21
APPR:	KDEKOSKI	2016/06/14

THIRD ANGLE PROJECTION

DRAWING	SERIES
A1-SIZE	33481

molex

MX150 BLADE
SINGLE ROW SEALED ASSY MAT SEAL

PRODUCT CUSTOMER DRAWING

DOCUMENT NUMBER	DOC TYPE	DOC PART	REVISION
SD-33481-0001	PSD	001	A1

MATERIAL NUMBER	CUSTOMER	SHEET NUMBER
SEE NOTE 2a.	GENERAL MARKET	2 OF 9

DOCUMENT STATUS	P1	RELEASE DATE	2018/10/04	15:02:02

SHEET DESCRIPTION

KEY CONFIGURATIONS

1X2

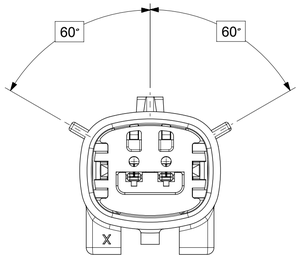

KEY A

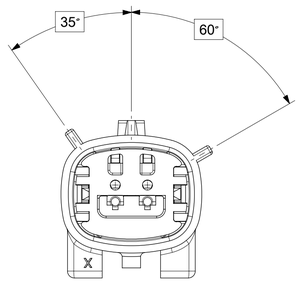

KEY B

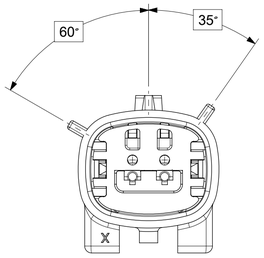

KEY C

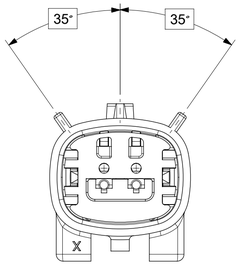

KEY D

THIS DRAWING CONTAINS INFORMATION THAT IS PROPRIETARY TO MOLEX ELECTRONIC TECHNOLOGIES, LLC AND SHOULD NOT BE USED WITHOUT WRITTEN PERMISSION

SYMBOLS	
FA	= 0
FC	= 0
FP	= 0
S	= 0
▼	= 0
C	= 0
☒	= 0
■	= 0
V	= 0

DIMENSION UNITS	SCALE
MM ONLY	3:1

GENERAL TOLERANCES (UNLESS SPECIFIED)

ANGULAR TOL	±	1.0 °
4 PLACES	±	
3 PLACES	±	
2 PLACES	±	0.1
1 PLACE	±	0.2
0 PLACES	±	

DRAFT WHERE APPLICABLE MUST REMAIN WITHIN DIMENSIONS

CURRENT REV DESC:

EC NO: 602373

DRWN: DSHETTY01 2018/05/25

CHK'D: MVANSLAMBROU 2018/10/04

APPR: MVANSLAMBROU 2018/10/04

INITIAL REVISION:

DRWN: APROFFITT 2015/07/21

APPR: KDEKOSKI 2016/06/14

THIRD ANGLE PROJECTION | DRAWING: A1-SIZE | SERIES: 33481

molex

MX150 BLADE
SINGLE ROW SEALED ASSY MAT SEAL

PRODUCT CUSTOMER DRAWING

DOCUMENT NUMBER	DOC TYPE	DOC PART	REVISION
SD-33481-0001	PSD	001	A1

MATERIAL NUMBER	CUSTOMER	SHEET NUMBER
SEE NOTE 2a.	GENERAL MARKET	3 OF 9

DOCUMENT STATUS	P1	RELEASE DATE	2018/10/04 15:02:02

SHEET DESCRIPTION

KEY CONFIGURATIONS CONT.

1X6

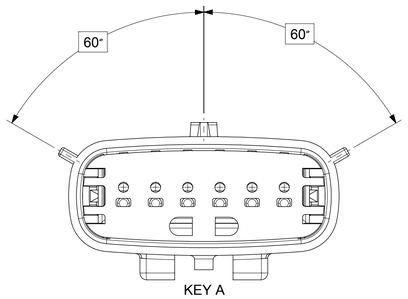

KEY A

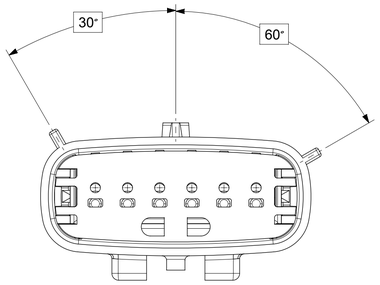

KEY B

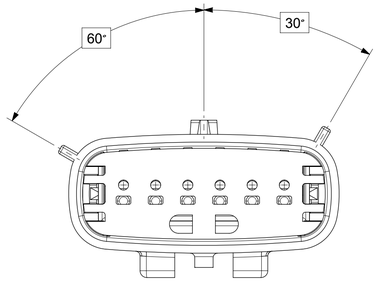

KEY C

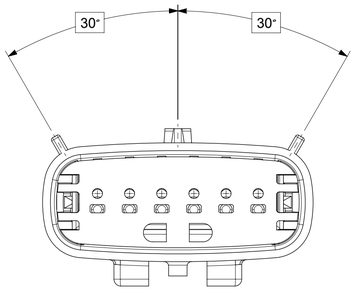

KEY D

SYMBOLS

= 0	
= 0	
= 0	
= 0	
= 0	
= 0	
= 0	
= 0	
= 0	

THIS DRAWING CONTAINS INFORMATION THAT IS PROPRIETARY TO MOLEX ELECTRONIC TECHNOLOGIES, LLC AND SHOULD NOT BE USED WITHOUT WRITTEN PERMISSION

DIMENSION UNITS	SCALE
MM ONLY	3:1

GENERAL TOLERANCES (UNLESS SPECIFIED)

ANGULAR TOL	±	1.0 °
4 PLACES	±	
3 PLACES	±	
2 PLACES	±	0.1
1 PLACE	±	0.2
0 PLACES	±	

DRAFT WHERE APPLICABLE MUST REMAIN WITHIN DIMENSIONS

CURRENT REV DESC:

EC NO: 602373
DRWN: DSHETTY01 2018/05/25
CHK'D: MVANSLAMBROU 2018/10/04
APPR: MVANSLAMBROU 2018/10/04

INITIAL REVISION:
DRWN: APROFFITT 2015/07/21
APPR: KDEKOSKI 2016/06/14

THIRD ANGLE PROJECTION

DRAWING	SERIES
A1-SIZE	33481

molex

MX150 BLADE
SINGLE ROW SEALED ASSY MAT SEAL

PRODUCT CUSTOMER DRAWING

DOCUMENT NUMBER	DOC TYPE	DOC PART	REVISION
SD-33481-0001	PSD	001	A1

MATERIAL NUMBER	CUSTOMER	SHEET NUMBER
SEE NOTE 2a.	GENERAL MARKET	4 OF 9

DOCUMENT STATUS	P1	RELEASE DATE	2018/10/04 15:02:02

SHEET DESCRIPTION

BLADE SEALED ASSEMBLY

CHARTED DIMENSIONS

DESCRIPTION	DIMENSIONS				
	A	B	C	D	E
1X2	N/A	1.75	21.00	55.50	17.30
1X6	29.69	1.75	31.71	54.45	17.23

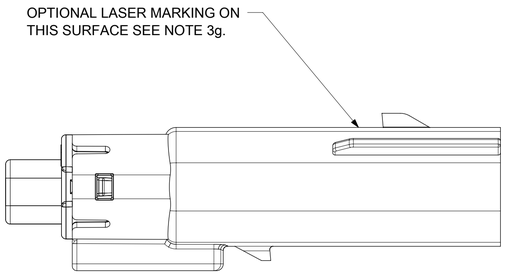

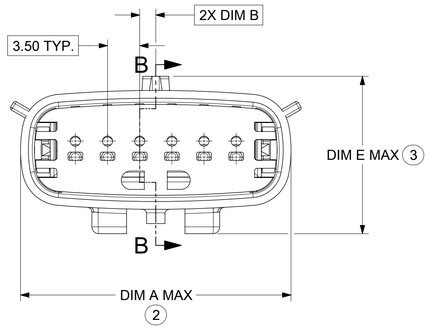

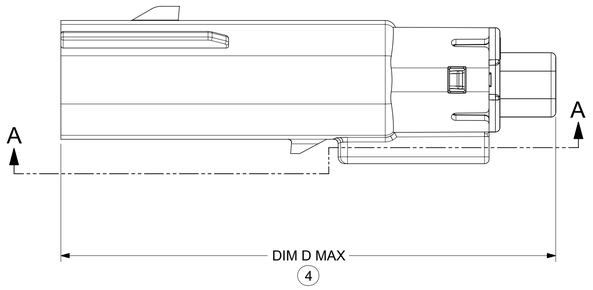

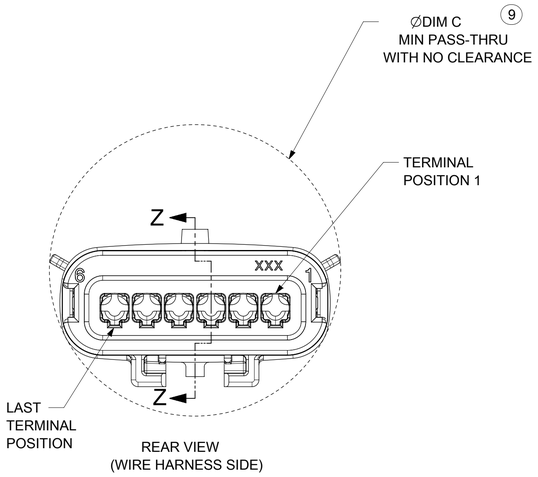

REAR VIEW
(WIRE HARNESS SIDE)

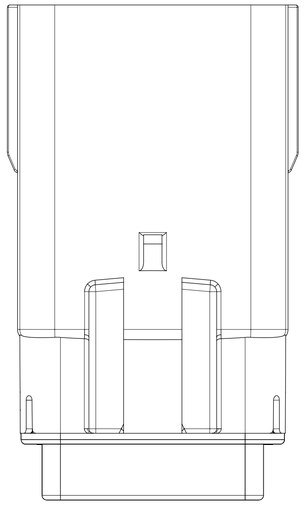

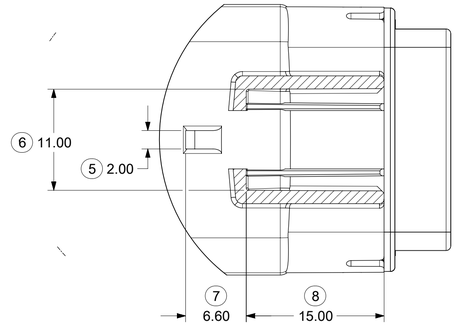

PARTIAL A-A
SCALE 3:1

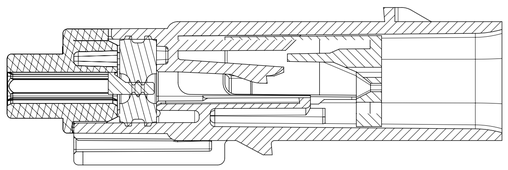

PRIMARY LOCK REINFORCEMENT (PLR) SHOWN
IN PRE-STAGED POSITION
SECTION B-B

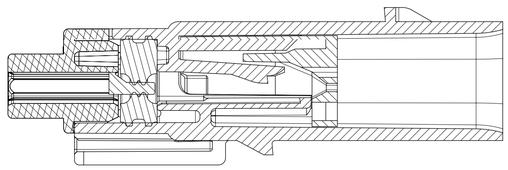

PRIMARY LOCK REINFORCEMENT (PLR) SHOWN
IN FINAL-LOCK POSITION
SECTION Z-Z

SYMBOLS	
FA	= 0
FC	= 0
FP	= 0
S	= 0
▼	= 0
C	= 0
☒	= 0
■	= 0
C	= 0

THIS DRAWING CONTAINS INFORMATION THAT IS PROPRIETARY TO MOLEX ELECTRONIC TECHNOLOGIES, LLC AND SHOULD NOT BE USED WITHOUT WRITTEN PERMISSION

DIMENSION UNITS	SCALE
MM ONLY	3:1

GENERAL TOLERANCES (UNLESS SPECIFIED)

ANGULAR TOL	±	1.0 °
4 PLACES	±	
3 PLACES	±	
2 PLACES	±	0.1
1 PLACE	±	0.2
0 PLACES	±	

DRAFT WHERE APPLICABLE MUST REMAIN WITHIN DIMENSIONS

CURRENT REV DESC:

EC NO: 602373
DRWN: DSHETTY01 2018/05/25
CHK'D: MVANSLAMBROU 2018/10/04
APPR: MVANSLAMBROU 2018/10/04

INITIAL REVISION:
DRWN: APROFFITT 2015/07/21
APPR: KDEKOSKI 2016/06/14

THIRD ANGLE PROJECTION

DRAWING	SERIES
A1-SIZE	33481

molex

MX150 BLADE
SINGLE ROW SEALED ASSY MAT SEAL

PRODUCT CUSTOMER DRAWING

DOCUMENT NUMBER	DOC TYPE	DOC PART	REVISION
SD-33481-0001	PSD	001	A1

MATERIAL NUMBER	CUSTOMER	SHEET NUMBER
SEE NOTE 2a.	GENERAL MARKET	5 OF 9

DOCUMENT STATUS	P1	RELEASE DATE	2018/10/04 15:02:02

SHEET DESCRIPTION

BACKSHELL

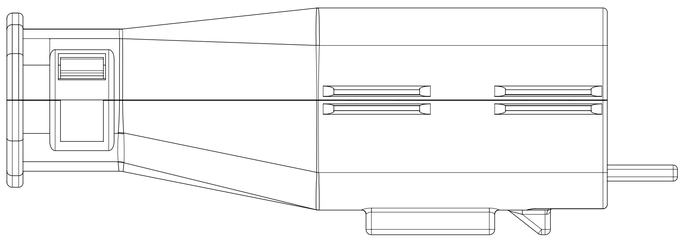

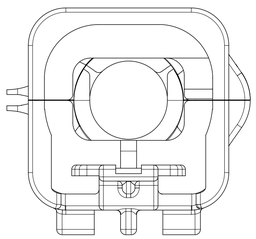

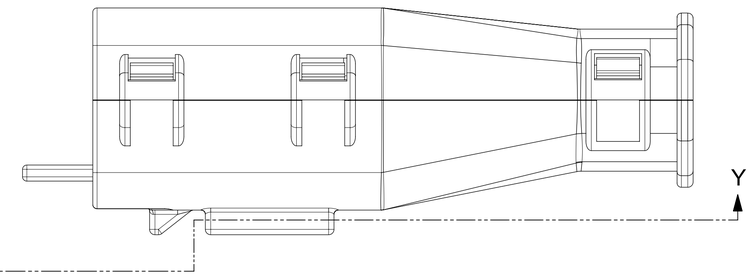

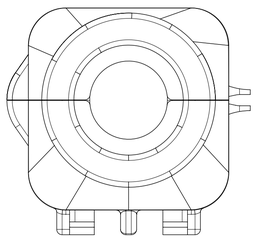

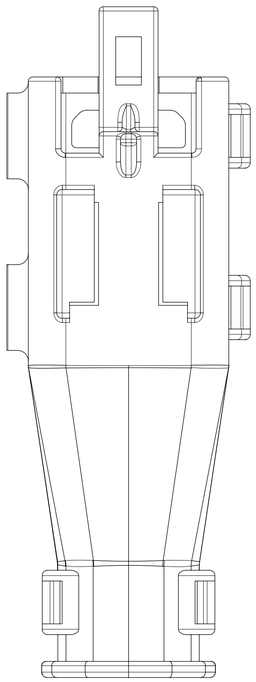

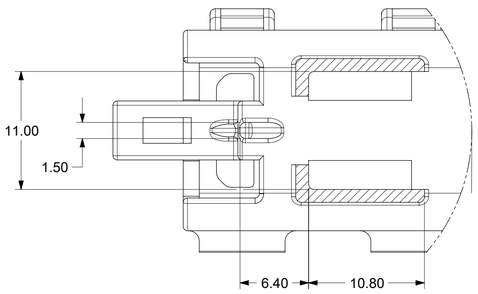

PARTIAL Y-Y
SCALE 3.5:1

SYMBOLS	THIS DRAWING CONTAINS INFORMATION THAT IS PROPRIETARY TO MOLEX ELECTRONIC TECHNOLOGIES, LLC AND SHOULD NOT BE USED WITHOUT WRITTEN PERMISSION			
F = 0	DIMENSION UNITS: MM ONLY	SCALE: 3.5:1	CURRENT REV DESC:	molex
C = 0	GENERAL TOLERANCES (UNLESS SPECIFIED)			MX150 BLADE SINGLE ROW SEALED ASSY MAT SEAL
F = 0	ANGULAR TOL ± 1.0 °		EC NO: 602373	
S = 0	4 PLACES ±		DRWN: DSHETTY01 2018/05/25	PRODUCT CUSTOMER DRAWING
= 0	3 PLACES ±		CHK'D: MVANSLAMBROU 2018/10/04	
C = 0	2 PLACES ± 0.1		APPR: MVANSLAMBROU 2018/10/04	DOCUMENT NUMBER: SD-33481-0001 / DOC TYPE: PSD / DOC PART: 001 / REVISION: A1
= 0	1 PLACE ± 0.2		INITIAL REVISION:	
= 0	0 PLACES ±		DRWN: APROFFITT 2015/07/21	
= 0	DRAFT WHERE APPLICABLE MUST REMAIN WITHIN DIMENSIONS		APPR: KDEKOSKI 2016/06/14	
	THIRD ANGLE PROJECTION	DRAWING: A1-SIZE	SERIES: 33481	MATERIAL NUMBER: SEE NOTE 2a. / CUSTOMER: GENERAL MARKET / SHEET NUMBER: 8 OF 9

DOCUMENT STATUS	P1	RELEASE DATE	2018/10/04 15:02:02

SHEET DESCRIPTION
BACKSHELL CONFIGURATIONS

CHARTED DIMENSIONS

CKT	BLADE CONFIGURATION	RECEPTACLE CONFIGURATION	DIMENSIONS M	N	P	R	S
1X2	STANDARD	STANDARD	107.84	29.50	27.00	26.25	25.00

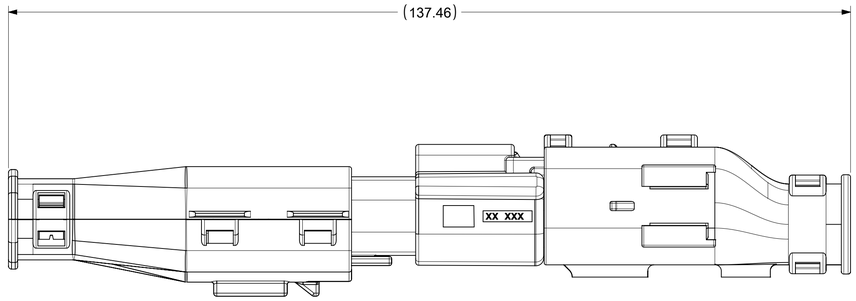

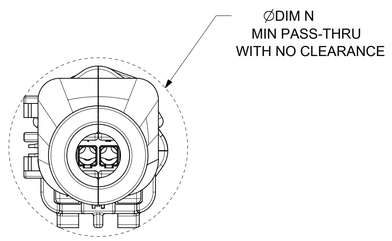

OVERALL MATED SYSTEM WITH BLADE AND RECEPTACLE BACKSHELL

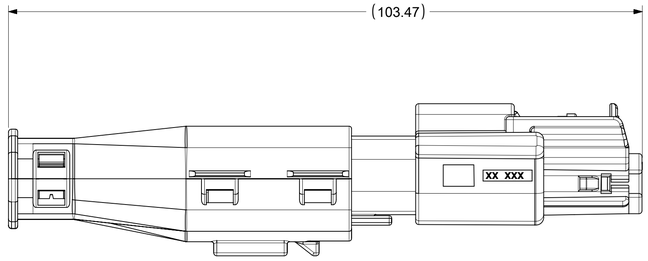

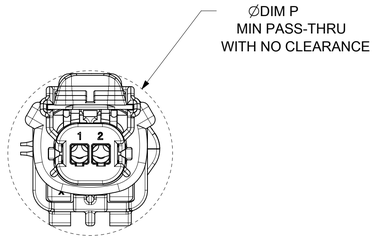

OVERALL MATED SYSTEM WITH BLADE BACKSHELL

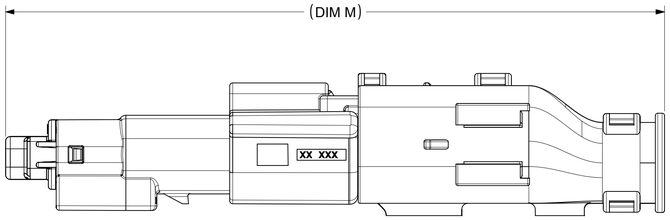

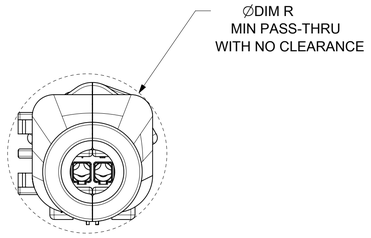

OVERALL MATED SYSTEM WITH RECEPTACLE BACKSHELL

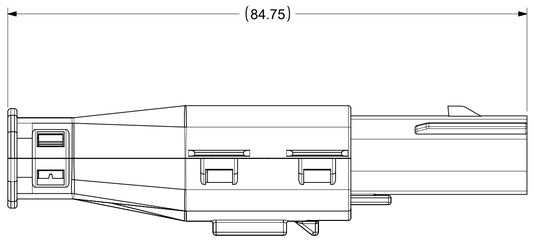

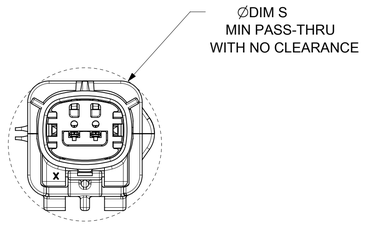

BLADE SEALED ASSEMBLY WITH BLADE BACKSHELL

SYMBOLS
- = 0
- = 0
- = 0
- = 0
- = 0
- = 0
- = 0
- = 0
- = 0

THIS DRAWING CONTAINS INFORMATION THAT IS PROPRIETARY TO MOLEX ELECTRONIC TECHNOLOGIES, LLC AND SHOULD NOT BE USED WITHOUT WRITTEN PERMISSION

DIMENSION UNITS	SCALE
MM ONLY	2:1

GENERAL TOLERANCES (UNLESS SPECIFIED)

ANGULAR TOL	±	1.0 °
4 PLACES	±	
3 PLACES	±	
2 PLACES	±	0.1
1 PLACE	±	0.2
0 PLACES	±	

DRAFT WHERE APPLICABLE MUST REMAIN WITHIN DIMENSIONS

CURRENT REV DESC:

EC NO: 602373
DRWN: DSHETTY01 2018/05/25
CHK'D: MVANSLAMBROU 2018/10/04
APPR: MVANSLAMBROU 2018/10/04

INITIAL REVISION:
DRWN: APROFFITT 2015/07/21
APPR: KDEKOSKI 2016/06/14

molex

MX150 BLADE
SINGLE ROW SEALED ASSY MAT SEAL

PRODUCT CUSTOMER DRAWING

DOCUMENT NUMBER	DOC TYPE	DOC PART	REVISION
SD-33481-0001	PSD	001	A1

THIRD ANGLE PROJECTION	DRAWING	SERIES	MATERIAL NUMBER	CUSTOMER	SHEET NUMBER
	A1-SIZE	33481	SEE NOTE 2a.	GENERAL MARKET	9 OF 9

DOCUMENT STATUS	P1	RELEASE DATE	2018/10/04 15:02:02