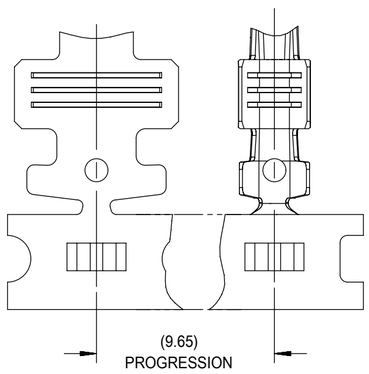

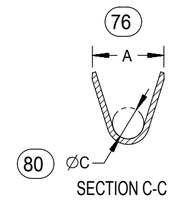

SECTION C-C

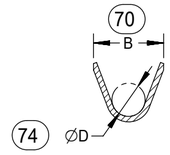

SECTION B-B

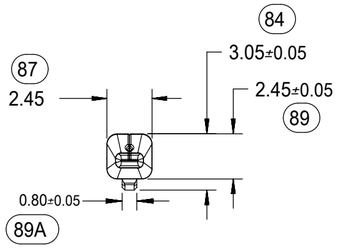

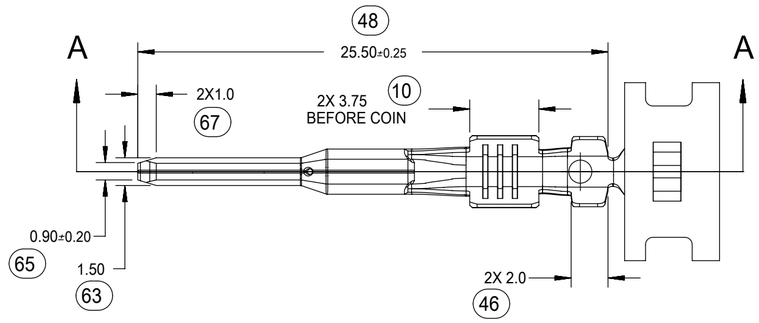

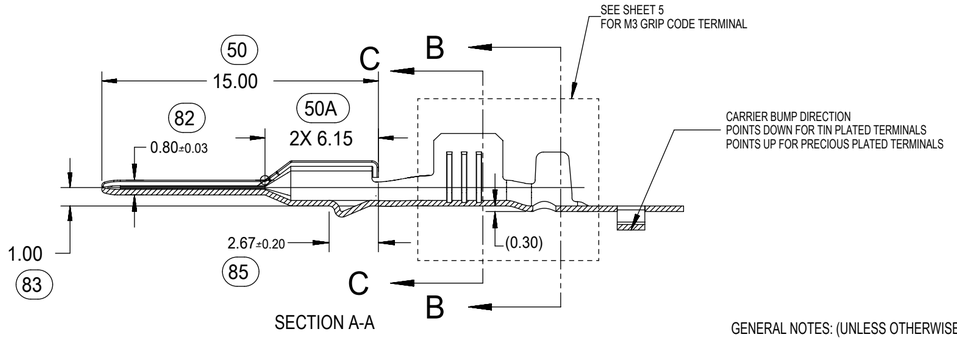

SECTION A-A

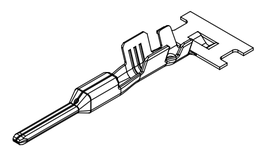

ISO VIEW
SCALE 2:1

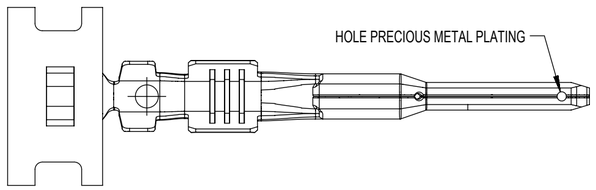

PRECIOUS METAL PLATED BLADE



TIN PLATED BLADE

GENERAL NOTES: (UNLESS OTHERWISE SPECIFIED)

1. MATING TERMINAL SHOWN ON SD-33012-002

2. MATERIAL: ASTM B422, UNS C19025, HR04
   THICKNESS: 0.30 mm ±0.01
   TEMPER: FULL HARD (REF)
   TENSILE: 496-572 MPA

3. TIN PLATED TERMINAL FINISH:
   OVERALL UNDERPLATE ELECTRODEPOSITED NICKEL
   OVERALL ELECTRODEPOSITED REFLOW TIN

4. GOLD PLATED TERMINAL FINISH
   OVERALL UNDERPLATE ELECTRODEPOSITED DUCTILE SULFAMATE NICKEL
   CONTACT AREA - ELECTRODEPOSITED GOLD
   GRIP AREA - ELECTRODEPOSITED 100% TIN MATTE FINISH

5. SILVER PLATED TERMINAL FINISH
   OVERALL UNDERPLATE ELECTRODEPOSITED DUCTILE SULFAMATE NICKEL
   CONTACT AREA - ELECTRODEPOSITED PURE SILVER (0.5% MAX IMPURITIES) SEMI-BRIGHT FINISH
   - SILVER ANTI-TARNISH : EVABRITE
   GRIP AREA - ELECTRODEPOSITED 100% TIN MATTE FINISH

6. MEETS CRIMP PERFORMANCE SPECIFICATION SAE/USCAR-21 (8/2001)

7. MEETS PERFORMANCE STANDARD FOR AUTOMOTIVE ELECTRICAL CONNECTOR SYSTEMS
   SAE/USCAR-2 REV 3 (APRIL 2001)

8. MEETS FIELD CORRELATED LIFE TEST SAE/USCAR-20 (11/2001)

9. MEETS WIRING COMPONENT DESIGN GUIDLINES SAE/USCAR-12 REV 2 (12/2001)

10. MEETS ELECTRICAL CONNECTION SYSTEM DESIGN SPECIFICATION (SDS) REV 11 (5/2002)

11. REFERENCE PK-31300-516 FOR REEL DIRECTION

12. REFERENCE AS-33000-001 FOR CRIMP INFORMATION

SYMBOLS	
FA = 0	
FC = 0	
FB = 0	
S = 0	
= 0	
C = 0	
= 0	
= 0	
= 0	

THIS DRAWING CONTAINS INFORMATION THAT IS PROPRIETARY TO MOLEX ELECTRONIC TECHNOLOGIES, LLC AND SHOULD NOT BE USED WITHOUT WRITTEN PERMISSION

DIMENSION UNITS	SCALE
mm	4:1

GENERAL TOLERANCES (UNLESS SPECIFIED)

ANGULAR TOL	±	3.0 °
4 PLACES	±	
3 PLACES	±	
2 PLACES	±	0.10
1 PLACE	±	0.3
0 PLACES	±	

DRAFT WHERE APPLICABLE MUST REMAIN WITHIN DIMENSIONS

CURRENT REV DESC:

EC NO: 631014
DRWN: NVENKATESHSH 2019/05/11
CHK'D: ADHIR 2020/03/06
APPR: ADHIR 2020/03/06

INITIAL REVISION:
DRWN: LPULLIAM 2006/01/31
APPR: bmoser 2006/02/02

THIRD ANGLE PROJECTION | DRAWING: C-SIZE | SERIES: 33000

molex

MX150 1.5MM BLADE TERMINAL

PRODUCT CUSTOMER DRAWING

DOCUMENT NUMBER	DOC TYPE	DOC PART	REVISION
SD-33000-001	PSD	001	D2

MATERIAL NUMBER	CUSTOMER	SHEET NUMBER
SEE TABLE	GENERAL MARKET	1 OF 5

DOCUMENT STATUS	P1	RELEASE DATE	2020/03/06 02:34:08

FORMAT: master-tb-prod-C
REVISION: H
DATE: 2018/01/18

FAMILY	GENDER	SEALING	PLATING	PART NUMBER	PAYOFF DIRECTION	GRIP CODE	WIRE SIZES*	A ±0.30	B ±0.30	C ±0.30	D ±0.30	SPECIAL CHARACTERISTICS
MX150	BLADE	MAT SEAL UNSEALED	Sn	33000-0001	RIGHT (B)	14	14AWG 1.50-2.00mm²	3.9	3.8	1.7	1.6	HIGH PERFORMANCE Sn
				33000-1001	LEFT (D)							
				33000-0002	RIGHT (B)	18	20/18/16AWG 0.75-1.25mm²	3.3	3.1	1.3	1.4	
				33000-1002	LEFT (D)							
				33000-0003	RIGHT (B)	22	22AWG	2.5	2.6	0.9	1.0	
				33000-1003	LEFT (D)							
				33000-0004	RIGHT (B)	M3	0.35-0.50mm²	2.5	2.7	0.9	1.54 ±0.1	
				33000-1004	LEFT (D)							
			Au	33011-1002	RIGHT (B)	14	14AWG 1.50-2.00mm²	3.9	3.8	1.7	1.6	HIGH PERFORMANCE Au
				33011-0002	LEFT (D)							
				33011-1004	RIGHT (B)	18	20/18/16AWG 0.75-1.25mm²	3.3	3.1	1.3	1.4	
				33011-0004	LEFT (D)							
				33011-1006	RIGHT (B)	22	22AWG	2.5	2.6	0.9	1.0	
				33011-0006	LEFT (D)							
				33011-1008	RIGHT (B)	M3	0.35-0.50mm²	2.5	2.7	0.9	1.54 ±0.1	
				33011-0008	LEFT (D)							
			Ag	33011-2003	RIGHT (B)	14	14AWG 1.50-2.00mm²	3.9	3.8	1.7	1.6	HIGH PERFORMANCE Ag
				33011-3003	LEFT (D)							
				33011-2002	RIGHT (B)	18	20/18/16AWG 0.75-1.25mm²	3.3	3.1	1.3	1.4	
				33011-3002	LEFT (D)							
				33011-2001	RIGHT (B)	22	22AWG	2.5	2.6	0.9	1.0	
				33011-3001	LEFT (D)							
				33011-2004	RIGHT (B)	M3	0.35-0.50mm²	2.5	2.7	0.9	1.54 ±0.1	
				33011-3004	LEFT (D)							

* REFERENCE AS-33000-001 FOR SPECIFIC WIRE TYPES

SYMBOLS
FA = 0
FC = 0
FD = 0
S = 0
= 0
C = 0
= 0
= 0
= 0

THIS DRAWING CONTAINS INFORMATION THAT IS PROPRIETARY TO MOLEX ELECTRONIC TECHNOLOGIES, LLC AND SHOULD NOT BE USED WITHOUT WRITTEN PERMISSION

DIMENSION UNITS: mm
SCALE:
GENERAL TOLERANCES (UNLESS SPECIFIED)
ANGULAR TOL ± 3.0 °
4 PLACES ±
3 PLACES ±
2 PLACES ± 0.10
1 PLACE ± 0.3
0 PLACES ±
DRAFT WHERE APPLICABLE MUST REMAIN WITHIN DIMENSIONS

CURRENT REV DESC:

EC NO: 631014
DRWN: NVENKATESHSH 2019/05/11
CHK'D: ADHIR 2020/03/06
APPR: ADHIR 2020/03/06

INITIAL REVISION:
DRWN: LPULLIAM 2006/01/31
APPR: bmoser 2006/02/02

THIRD ANGLE PROJECTION | DRAWING: C-SIZE | SERIES: 33000

molex

MX150 1.5MM BLADE TERMINAL

PRODUCT CUSTOMER DRAWING

DOCUMENT NUMBER	DOC TYPE	DOC PART	REVISION
SD-33000-001	PSD	001	D2

MATERIAL NUMBER	CUSTOMER	SHEET NUMBER
SEE TABLE	GENERAL MARKET	2 OF 5

DOCUMENT STATUS	P1	RELEASE DATE	2020/03/06 02:34:08

FORMAT: master-tb-prod-C
REVISION: H
DATE: 2018/01/18

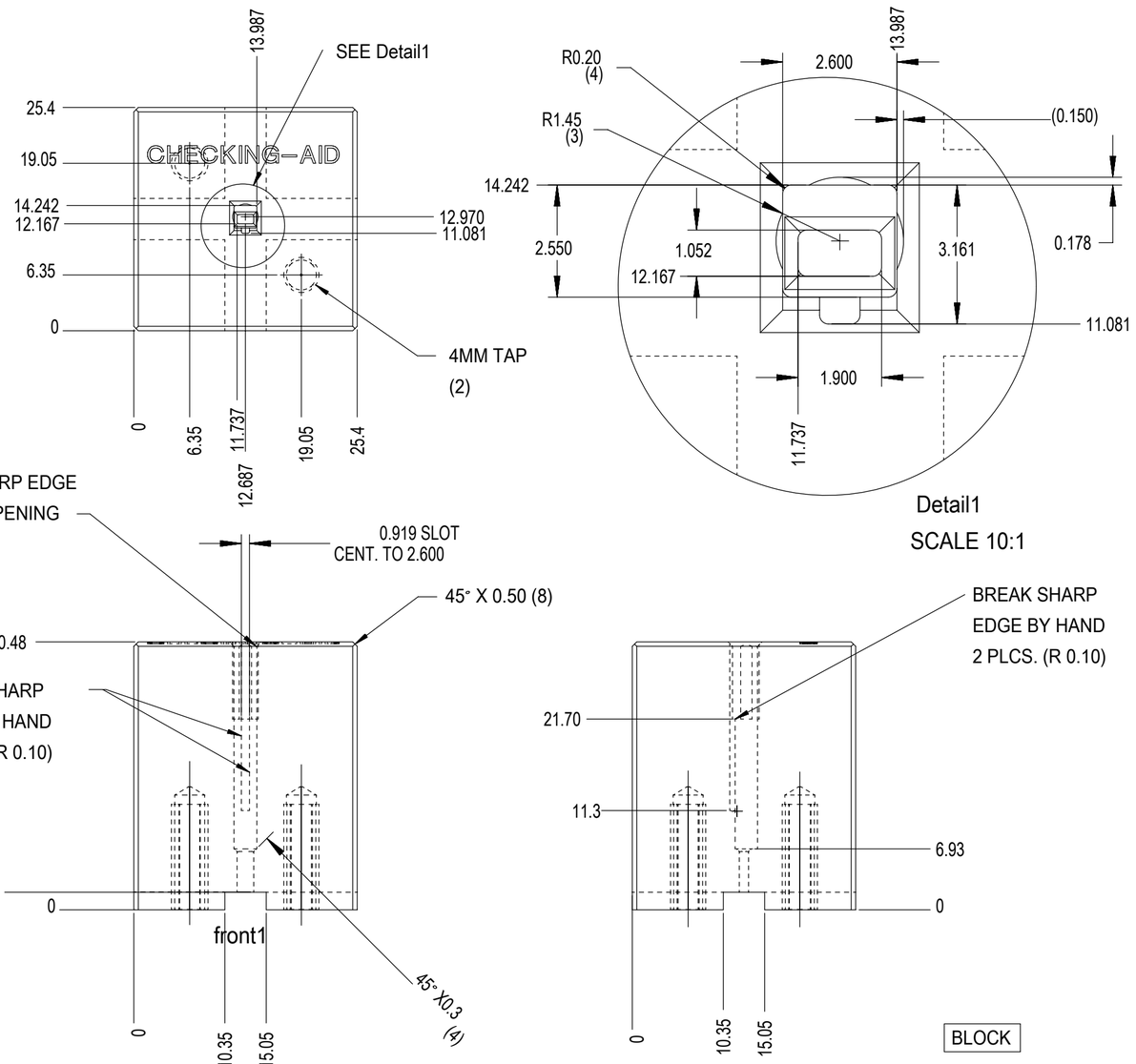

Detail1
SCALE 10:1

BLOCK

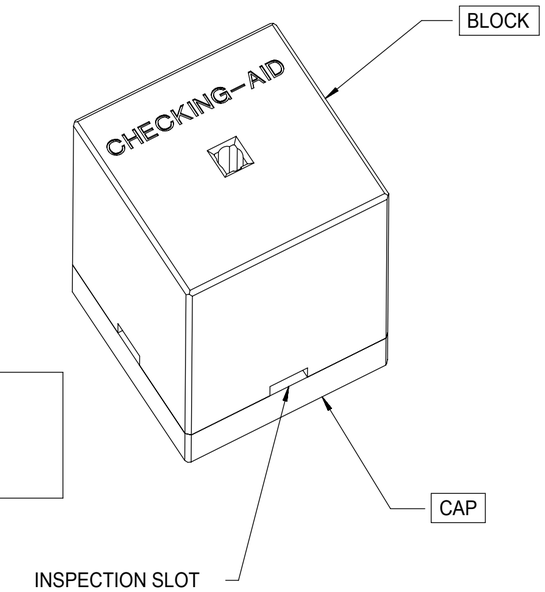

CHECKING-AID
2 PIECE ASM. A2 TOOL STEEL
HARDEN & GRIND TO A ROCKWELL
HARDNESS "C" SCALE OF 56-58

CHECKING AID TOLERANCE
.XXX = .005
.XX = .03
.X = .3

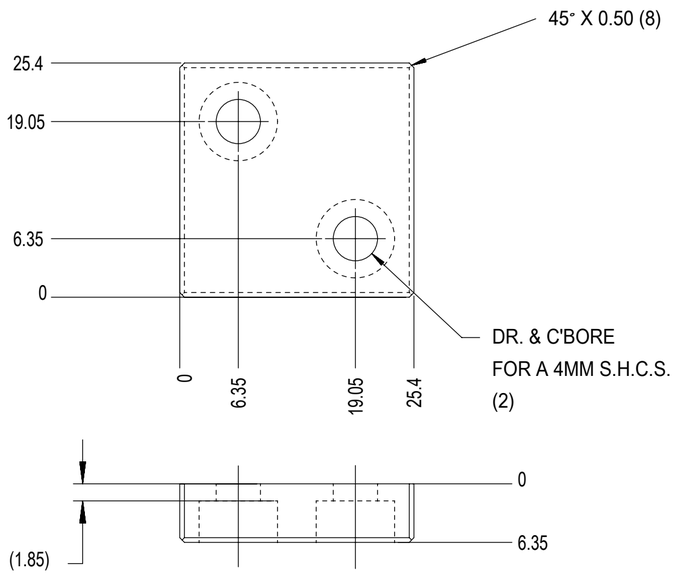

CAP

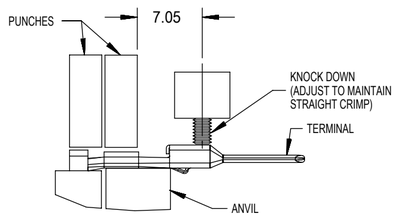

CRIMP TOOLING
SCALE 2:1

CRIMP REQUIREMENTS:

1. CRIMP STRAIGHTNESS MUST BE MAINTAINED.
   USE A KNOCKDOWN TOOL LOCATED AS SHOWN.
   TERMINAL BOX MUST NOT BE DEFORMED

2. AFTER CRIMPING, THE TERMINAL AND WIRE MUST FIT FREELY
   INTO THE CHECKING AID 33000-700. PROPER INSERTION
   DEPTH IS MET WHEN BLADE TIP STOPS ON CAP. SLOTS PROVIDED
   TO VISUALLY INSPECT STOPAGE OF PIN TIP.

3. FOR OTHER MECHANICAL REQUIREMENTS ON CRIMPED TERMINALS,
   REFER TO SAE/USCAR-21 (5-13-02) SECTIONS 4.2
   (VISUAL INSPECTION), 4.3 (CROSS SECTION ANALYSIS)
   AND 4.4 (CONDUCTOR CRIMP PULLOUT FORCE)

SYMBOLS	
A = 0	
C = 0	
B = 0	
S = 0	
= 0	
C = 0	
= 0	
= 0	
= 0	

THIS DRAWING CONTAINS INFORMATION THAT IS PROPRIETARY TO MOLEX ELECTRONIC TECHNOLOGIES, LLC AND SHOULD NOT BE USED WITHOUT WRITTEN PERMISSION

DIMENSION UNITS	SCALE
mm	2:1

GENERAL TOLERANCES (UNLESS SPECIFIED)

ANGULAR TOL	±	3.0 °
4 PLACES	±	
3 PLACES	±	
2 PLACES	±	0.10
1 PLACE	±	0.3
0 PLACES	±	

DRAFT WHERE APPLICABLE MUST REMAIN WITHIN DIMENSIONS

CURRENT REV DESC:

EC NO: 631014
DRWN: NVENKATESHSH 2019/05/11
CHK'D: ADHIR 2020/03/06
APPR: ADHIR 2020/03/06

INITIAL REVISION:
DRWN: LPULLIAM 2006/01/31
APPR: bmoser 2006/02/02

THIRD ANGLE PROJECTION | DRAWING: C-SIZE | SERIES: 33000

molex

MX150 1.5MM BLADE TERMINAL

PRODUCT CUSTOMER DRAWING

DOCUMENT NUMBER	DOC TYPE	DOC PART	REVISION
SD-33000-001	PSD	001	D2

MATERIAL NUMBER	CUSTOMER	SHEET NUMBER
SEE TABLE	GENERAL MARKET	3 OF 5

DOCUMENT STATUS	P1	RELEASE DATE	2020/03/06 02:34:08

FORMAT: master-tb-prod-C
REVISION: H
DATE: 20180118

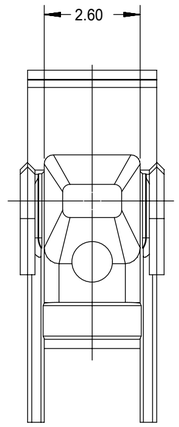

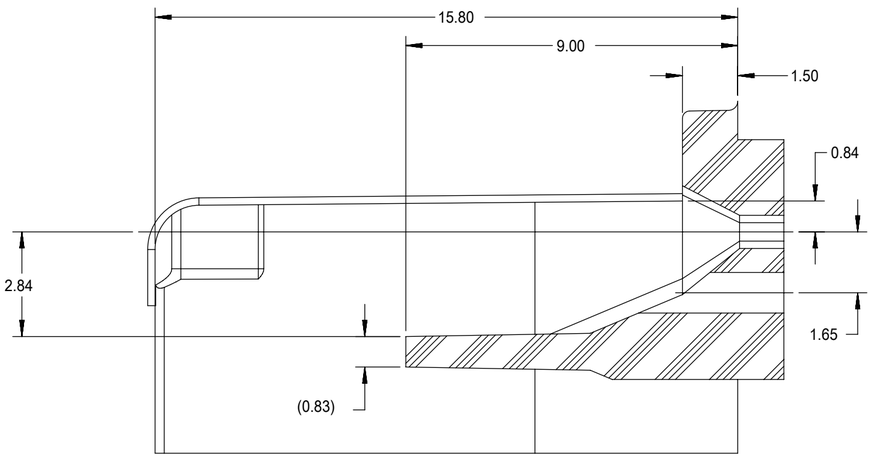

SECTION D-D

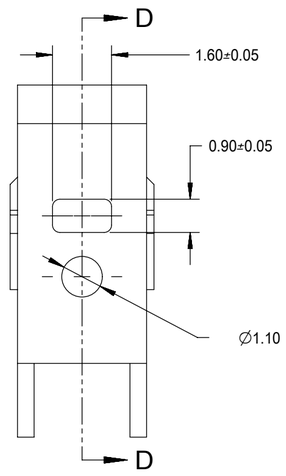

TPA/INSERT DETAIL

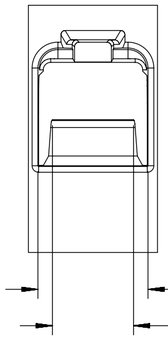

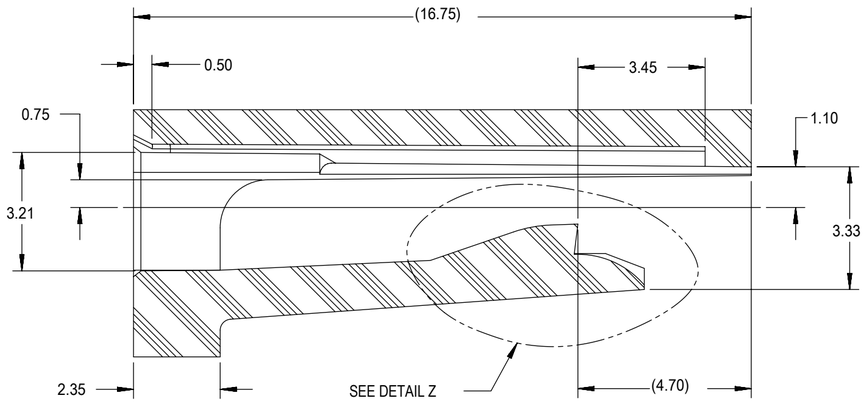

SECTION E-E

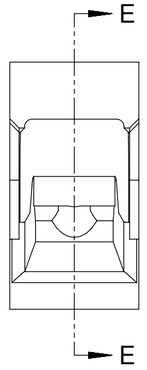

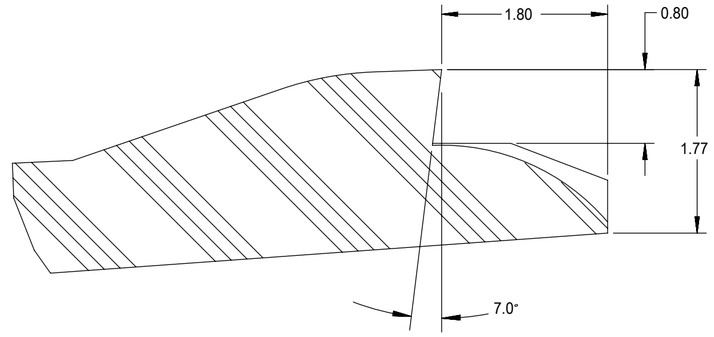

DETAIL Z
SCALE 20:1

HOUSING DETAIL

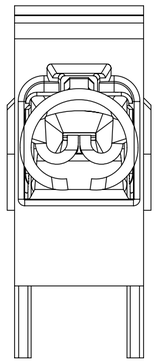

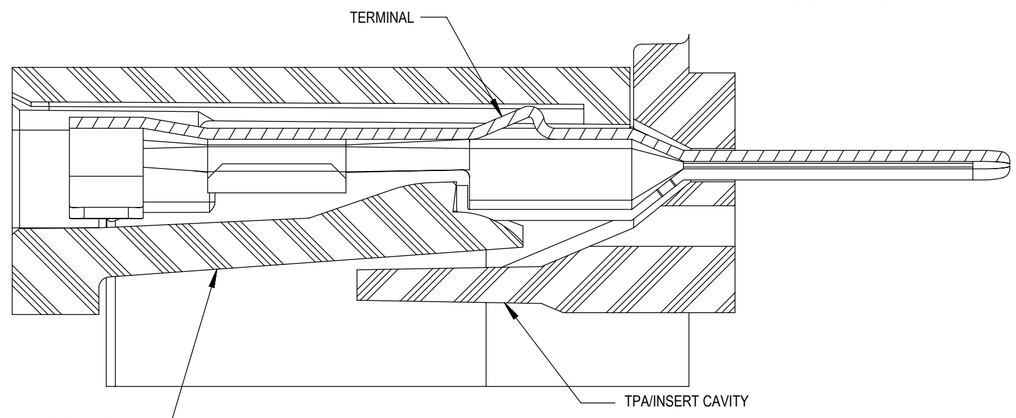

SECTION F-F

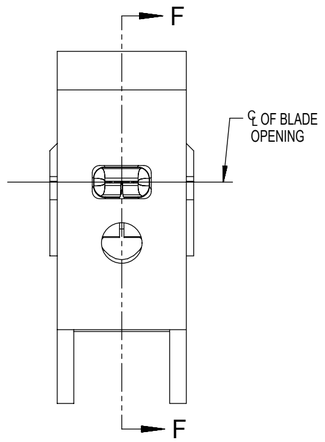

NOTES: (UNLESS OTHERWISE SPECIFIED)

1. TOLERANCES: LINEAR ±0.10
   ANGULAR 3°
2. ALL DRAFT WITHIN TOLERANCE
3. MAX RADII ON ALL CORNERS SHOWN SHARP: 0.10
4. MAX FLASH PERMISSIBLE: 0.1
5. EJECTOR PIN MARKS PERMISSIBLE IF FLUSH TO 0.25 BELOW SURFACE
6. MATERIAL: HOUSING/FINGER SPECIFICATION ENGINEERED FOR MATERIAL WITH THE FOLLOWING PROPERTIES:
   A. FLEXURAL MODULUS = 4,500 TO 9,400 MPa PER ASTM TEST D790
   B. ELONGATION AT YIELD = 2.3% OR BETTER PER ASTM TEST D638 TYPE V
7. CAVITY SPEC FOR USE ONLY WITH MOLEX BLADE TERMINAL PART NUMBERS (EXCEPT P/N'S FOR UNSEALED APPLICATIONS) SPECIFIED ELSEWHERE ON THIS DRAWING

BLADE CAVITY ASSEMBLY VIEWS

SYMBOLS	
FA = 0	
FC = 0	
FP = 0	
S = 0	
▼ = 0	
C = 0	
☒ = 0	
■ = 0	
V = 0	

THIS DRAWING CONTAINS INFORMATION THAT IS PROPRIETARY TO MOLEX ELECTRONIC TECHNOLOGIES, LLC AND SHOULD NOT BE USED WITHOUT WRITTEN PERMISSION

DIMENSION UNITS	SCALE
mm	

GENERAL TOLERANCES (UNLESS SPECIFIED)		
ANGULAR TOL	±	3.0 °
4 PLACES	±	
3 PLACES	±	
2 PLACES	±	0.10
1 PLACE	±	0.3
0 PLACES	±	

DRAFT WHERE APPLICABLE MUST REMAIN WITHIN DIMENSIONS

CURRENT REV DESC:

EC NO: 631014

DRWN:	NVENKATESHSH	2019/05/11
CHK'D:	ADHIR	2020/03/06
APPR:	ADHIR	2020/03/06

INITIAL REVISION:

DRWN:	LPULLIAM	2006/01/31
APPR:	bmoser	2006/02/02

THIRD ANGLE PROJECTION | DRAWING: C-SIZE | SERIES: 33000

molex

MX150 1.5MM BLADE TERMINAL

PRODUCT CUSTOMER DRAWING

DOCUMENT NUMBER	DOC TYPE	DOC PART	REVISION
SD-33000-001	PSD	001	D2

MATERIAL NUMBER	CUSTOMER	SHEET NUMBER
SEE TABLE	GENERAL MARKET	4 OF 5

DOCUMENT STATUS	P1	RELEASE DATE	2020/03/06 02:34:08

FORMAT: master-tb-prod-C
REVISION: H
DATE: 2018/01/18

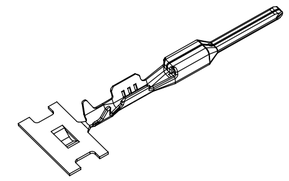

ISO VIEW
SCALE 2:1

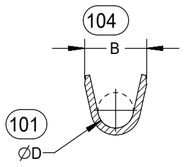

SECTION BB-BB

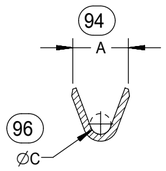

SECTION CC-CC

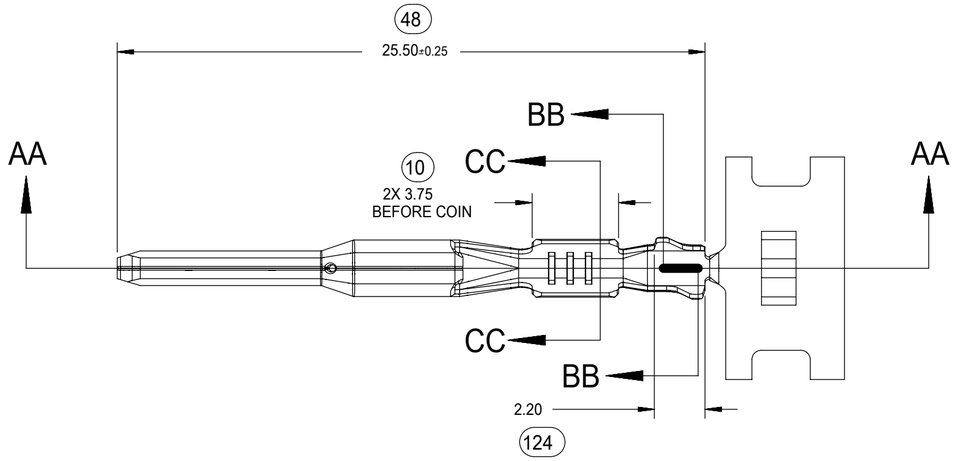

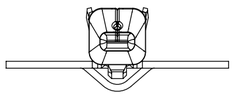

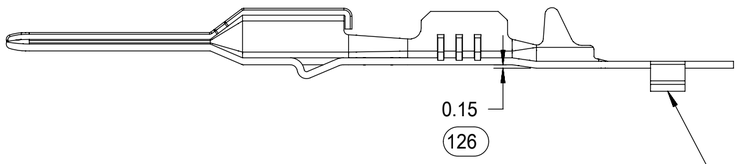

SECTION AA-AA
M3 GRIP CODE TERMINAL
SEE TABLE (SHEET 2) FOR PART NUMBERS

CARRIER BUMP DIRECTION
POINTS DOWN FOR TIN PLATED TERMINALS
POINTS UP FOR PRECIOUS METAL PLATED TERMINALS

SYMBOLS			
FA = 0			
FC = 0			
FP = 0			
S = 0			
▼ = 0			
C = 0			
☒ = 0			
■ = 0			
C = 0			

THIS DRAWING CONTAINS INFORMATION THAT IS PROPRIETARY TO MOLEX ELECTRONIC TECHNOLOGIES, LLC AND SHOULD NOT BE USED WITHOUT WRITTEN PERMISSION

DIMENSION UNITS	SCALE
mm	5:1

GENERAL TOLERANCES (UNLESS SPECIFIED)

ANGULAR TOL	±	3.0 °
4 PLACES	±	
3 PLACES	±	
2 PLACES	±	0.10
1 PLACE	±	0.3
0 PLACES	±	

DRAFT WHERE APPLICABLE MUST REMAIN WITHIN DIMENSIONS

CURRENT REV DESC:

EC NO: 631014
DRWN: NVENKATESHSH 2019/05/11
CHK'D: ADHIR 2020/03/06
APPR: ADHIR 2020/03/06

INITIAL REVISION:
DRWN: LPULLIAM 2006/01/31
APPR: bmoser 2006/02/02

THIRD ANGLE PROJECTION

DRAWING	SERIES
C-SIZE	33000

molex

MX150 1.5MM BLADE TERMINAL

PRODUCT CUSTOMER DRAWING

DOCUMENT NUMBER	DOC TYPE	DOC PART	REVISION
SD-33000-001	PSD	001	D2

MATERIAL NUMBER	CUSTOMER	SHEET NUMBER
SEE TABLE	GENERAL MARKET	5 OF 5

DOCUMENT STATUS	P1	RELEASE DATE	2020/03/06	02:34:08

FORMAT: master-tb-prod-C
REVISION: H
DATE: 2018/01/18