

DIMENSIONS FOR LARGE POLARIZATION RIB TERMINAL ONLY

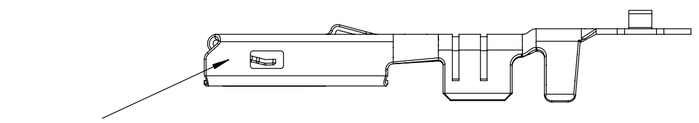

STAMP PLATING TYPE
Sn-TIN, Au-GOLD OR
Ag-SILVER IN THIS
AREA

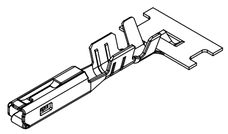

SCALE 2:1

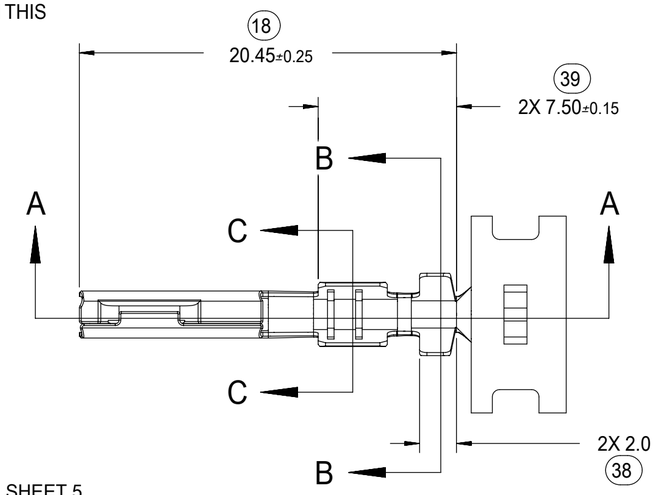

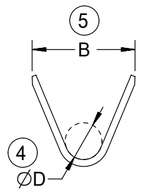

SECTION B-B
SCALE 5:1

NOTES: (UNLESS OTHERWISE SPECIFIED)

1. MATING TERMINAL SHOWN ON SD-33000-001

2. MATERIAL: ASTM B422, UNS C19025, HR04
   THICKNESS: 0.30 mm ±0.01
   TEMPER: FULL HARD (REF)
   TENSILE: 496 MIN MPA

3. TIN PLATED TERMINAL FINISH:
   OVERALL UNDERPLATE ELECTRODEPOSITED NICKEL
   OVERALL ELECTRODEPOSITED REFLOW TIN

4. GOLD PLATED TERMINAL FINISH
   OVERALL UNDERPLATE ELECTRODEPOSITED DUCTILE SULFAMATE NICKEL
   CONTACT AREA - ELECTRODEPOSITED GOLD
   GRIP AREA - ELECTRODEPOSITED 100% TIN MATTE FINISH

5. SILVER PLATED TERMINAL FINISH
   OVERALL UNDERPLATE ELECTRODEPOSITED DUCTILE SULFAMATE NICKEL
   CONTACT AREA - ELECTRODEPOSITED PURE SILVER (0.5% MAX
   IMPURITIES) SEMI-BRIGHT FINISH
   - SILVER ANTI-TARNISH : EVABRITE
   GRIP AREA - ELECTRODEPOSITED 100% TIN MATTE FINISH

6. MEETS PERFORMANCE SPECIFICATION FOR CABLE TO TERMINAL
   ELECTRICAL CRIMPS PER SAE/USCAR-21 (8/2001)

7. MEETS PERFORMANCE STANDARD FOR AUTOMOTIVE ELECTRICAL
   CONNECTOR SYSTEMS FOR SAE/USCAR-2, REV. 4 (TEMP CLASS 3)
   (5/2004)

8. MEETS ELECTRICAL CONNECTION SYSTEM DESIGN SPECIFICATION
   (SDS) REV.11 (5/2002)

9. MEETS FIELD CORRELATED LIFE TEST (FCLT) PER
   SAE/USCAR-20 (6/2004)

10. MEETS WIRING COMPONENT DESIGN GUIDLINES SAE/USCAR-12
    REV 2 (12/2001)

11. TSC ON A DIMENSION TO BE INTERPRETED AS DISTANCE TO
    A THEORETICAL SHARP CORNER AS IF THE RADIUS WERE NOT
    PRESENT

12. REFERENCE 97BG-14474-AAB FOR LARGE POLARIZATION RIB
    CAVITY SPECIFICATION

13. INSERTION FORCE (TIN) AVG. FROM PV TESTING =
    3.8N LARGE POLARIZATION RIB
    3.5N SMALL POLARIZATION RIB
    (REFERENCE)

14. ALL DIMENSIONS EXCEPT 33, 34, 41 & 42 ARE COMMON TO
    BOTH SMALL AND LARGE POLARIZATION RIB TERMINALS

15. REFERENCE PK-31300-516 FOR REEL DIRECTION

16. REFERENCE AS-33012-002 FOR CRIMP INFORMATION

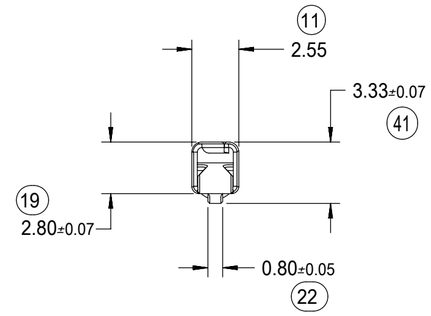

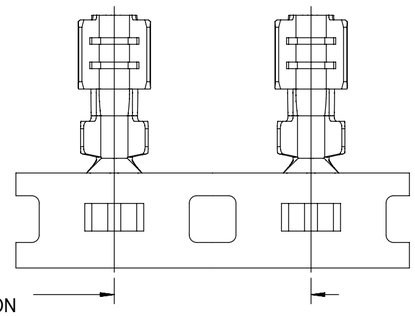

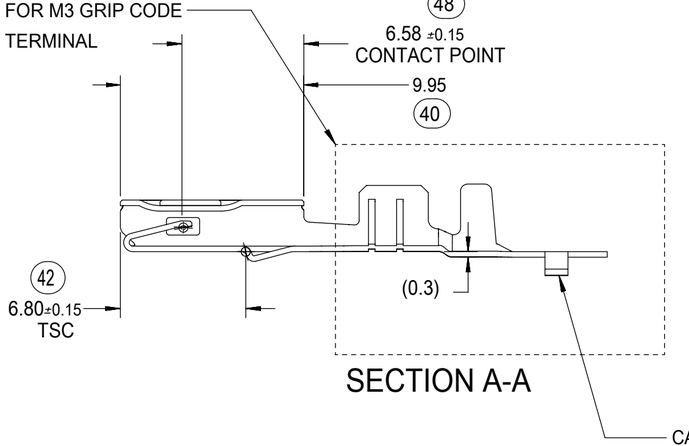

SECTION A-A

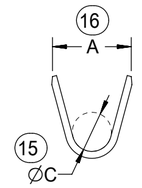

SECTION C-C
SCALE 5:1

CARRIER BUMP DIRECTION
POINTS DOWN FOR TIN PLATED TERMINALS
POINTS UP FOR PRECIOUS PLATED TERMINALS

SYMBOLS	THIS DRAWING CONTAINS INFORMATION THAT IS PROPRIETARY TO MOLEX ELECTRONIC TECHNOLOGIES, LLC AND SHOULD NOT BE USED WITHOUT WRITTEN PERMISSION			
FA = 0	DIMENSION UNITS: mm	SCALE: 4:1	CURRENT REV DESC:	molex
FC = 0	GENERAL TOLERANCES (UNLESS SPECIFIED)			
FF = 0	ANGULAR TOL ± 3.0 °			MX150 RECEPTACLE TERMINAL
S = 0	4 PLACES ±		EC NO: 645050	
▼ = 0	3 PLACES ±		DRWN: BSKANTHARAJU 2020/09/03	
C = 0	2 PLACES ± 0.10		CHK'D: JCUATACERVAN 2020/09/18	PRODUCT CUSTOMER DRAWING
☒ = 0	1 PLACE ± 0.3		APPR: JCUATACERVAN 2020/09/18	DOCUMENT NUMBER: SD-33012-002 | DOC TYPE: PSD | DOC PART: 001 | REVISION: D
■ = 0	0 PLACES ±		INITIAL REVISION:	
V = 0	DRAFT WHERE APPLICABLE MUST REMAIN WITHIN DIMENSIONS		DRWN: LPULLIAM 2005/06/21 APPR: BMOSER 2005/06/22	THIRD ANGLE PROJECTION | DRAWING: C-SIZE | SERIES: 33012 | MATERIAL NUMBER: SEE TABLE | CUSTOMER: GENERAL MARKET | SHEET NUMBER: 1 OF 5

DOCUMENT STATUS	P1	RELEASE DATE	2020/09/18 18:32:02

FORMAT: master-tb-prod-C
REVISION: H
DATE: 2018/01/18

FAMILY	GENDER	SEALING	PLATING	PART NUMBER	PAYOFF DIRECTION	GRIP CODE	WIRE SIZES *	A ±0.30	B ±0.30	C ±0.30	D ±0.30	SPECIAL CHARACTERISTICS
MX150	RECEPTACLE	MAT SEAL	Sn	33012-2001	RIGHT (B)	14	16/14AWG 1.25-2.00mm²	3.9	4.4	1.7	1.6	HIGH PERFORMANCE Sn
				33012-3001	LEFT (D)							
				33012-2002	RIGHT (B)	18	20/18AWG 0.75-1.00mm²	3.3	3.1	1.3	1.4	
				33012-3002	LEFT (D)							
				33012-2003	RIGHT (B)	22	22AWG	2.5	2.6	0.9	1.0	
				33012-3003	LEFT (D)							
				33012-2004	RIGHT (B)	M3	0.35-0.50mm²	2.5	2.7	0.9	1.54 ±0.1	
				33012-3004	LEFT (D)							
			Au	33001-2003	RIGHT (B)	14	16/14AWG 1.25-2.00mm²	3.9	4.4	1.7	1.6	HIGH PERFORMANCE Au
				33001-3003	LEFT (D)							
				33001-2004	RIGHT (B)	18	20/18AWG 0.75-1.00mm²	3.3	3.1	1.3	1.4	
				33001-3004	LEFT (D)							
				33001-2005	RIGHT (B)	22	22AWG	2.5	2.6	0.9	1.0	
				33001-3005	LEFT (D)							
				33001-2006	RIGHT (B)	M3	0.35-0.50mm²	2.5	2.7	0.9	1.54 ±0.1	
				33001-3006	LEFT (D)							
			Ag	33001-4001	RIGHT (B)	14	16/14AWG 1.25-2.00mm²	3.9	4.4	1.7	1.6	HIGH PERFORMANCE Ag
				33001-5001	LEFT (D)							
				33001-4002	RIGHT (B)	18	20/18AWG 0.75-1.00mm²	3.3	3.1	1.3	1.4	
				33001-5002	LEFT (D)							
				33001-4003	RIGHT (B)	22	22AWG	2.5	2.6	0.9	1.0	
				33001-5003	LEFT (D)							
				33001-4005	RIGHT (B)	M3	0.35-0.50mm²	2.5	2.7	0.9	1.54 ±0.1	
				33001-5005	LEFT (D)							
LARGE POLARIZATION RIB - NOT TO BE USED IN MX150 SEALED CONNECTORS												
MX150	RECEPTACLE	UNSEALED	Sn	33012-2021	RIGHT (B)	14	16/14AWG 1.25-2.00mm²	3.9	4.4	1.7	1.6	HIGH PERFORMANCE Sn
				33012-3021	LEFT (D)							
				33012-2022	RIGHT (B)	18	20/18AWG 0.75-1.00mm²	3.3	3.1	1.3	1.4	
				33012-3022	LEFT (D)							
				33012-2023	RIGHT (B)	22	22AWG 0.35-0.50mm²	2.5	2.6	0.9	1.0	
				33012-3023	LEFT (D)							
			Au	33001-2021	RIGHT (B)	14	16/14AWG 1.25-2.00mm²	3.9	4.4	1.7	1.6	HIGH PERFORMANCE Au
				33001-3021	LEFT (D)							
				33001-2022	RIGHT (B)	18	20/18AWG 0.75-1.00mm²	3.3	3.1	1.3	1.4	
				33001-3022	LEFT (D)							
				33001-2023	RIGHT (B)	22	22AWG 0.35-0.50mm²	2.5	2.6	0.9	1.0	
				33001-3023	LEFT (D)							
			Ag	33001-4021	RIGHT (B)	14	16/14AWG 1.25-2.00mm²	3.9	4.4	1.7	1.6	HIGH PERFORMANCE Ag
				33001-5021	LEFT (D)							
				33001-4022	RIGHT (B)	18	20/18AWG 0.75-1.00mm²	3.3	3.1	1.3	1.4	
				33001-5022	LEFT (D)							
				33001-4023	RIGHT (B)	22	22AWG 0.35-0.50mm²	2.5	2.6	0.9	1.0	
				33001-5023	LEFT (D)							

* REFERENCE AS-33012-002 FOR SPECIFIC WIRE TYPES

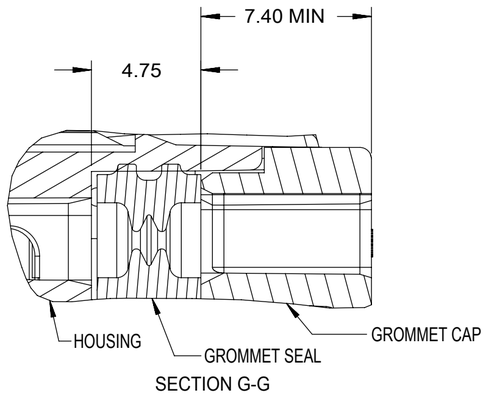

SECTION G-G

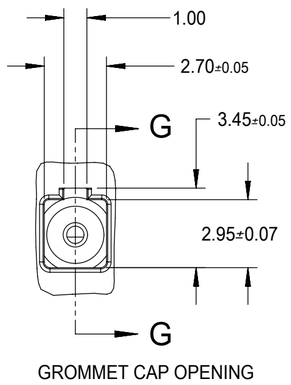

GROMMET CAP OPENING

GROMMET SEAL / CAP CONFIGURATION TO MODIFY LARGE POLARIZATION RIB CAVITY TO ACCEPT SMALL POLARIZATION RIB APPLICATIONS

DOCUMENT STATUS	P1	RELEASE DATE	2020/09/18 18:32:02

THIS DRAWING CONTAINS INFORMATION THAT IS PROPRIETARY TO MOLEX ELECTRONIC TECHNOLOGIES, LLC AND SHOULD NOT BE USED WITHOUT WRITTEN PERMISSION

SYMBOLS: FA = 0, FC = 0, FB = 0, S = 0, ▼ = 0, C = 0, ☒ = 0, ■ = 0, V = 0

DIMENSION UNITS: mm | SCALE

GENERAL TOLERANCES (UNLESS SPECIFIED)

ANGULAR TOL	±	3.0 °
4 PLACES	±	
3 PLACES	±	
2 PLACES	±	0.10
1 PLACE	±	0.3
0 PLACES	±	

DRAFT WHERE APPLICABLE MUST REMAIN WITHIN DIMENSIONS

CURRENT REV DESC:

EC NO: 645050
DRWN: BSKANTHARAJU 2020/09/03
CHK'D: JCUATACERVAN 2020/09/18
APPR: JCUATACERVAN 2020/09/18

INITIAL REVISION:
DRWN: LPULLIAM 2005/06/21
APPR: BMOSER 2005/06/22

molex

MX150
RECEPTACLE TERMINAL

PRODUCT CUSTOMER DRAWING

DOCUMENT NUMBER	DOC TYPE	DOC PART	REVISION
SD-33012-002	PSD	001	D

THIRD ANGLE PROJECTION	DRAWING	SERIES	MATERIAL NUMBER	CUSTOMER	SHEET NUMBER
	C-SIZE	33012	SEE TABLE	GENERAL MARKET	2 OF 5

FORMAT: master-tb-prod-C
REVISION: H
DATE: 2018/01/18

THIS CHECKING - AID IS FOR SMALL POLARIZATION RIB TERMINALS ONLY

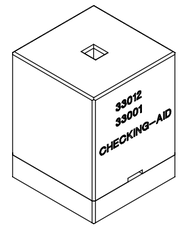

CHECKING - AID ASSEMBLY
SCALE 1:1

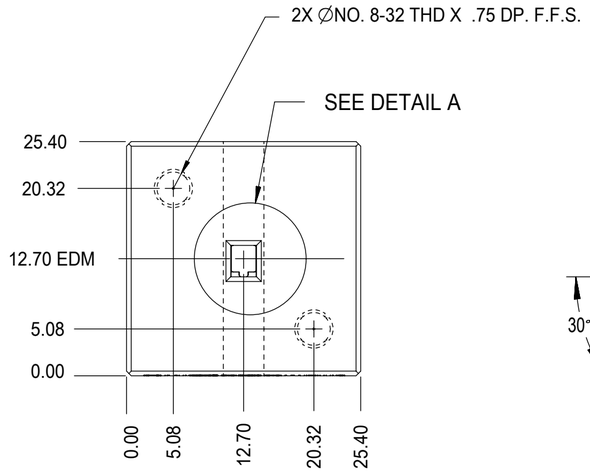

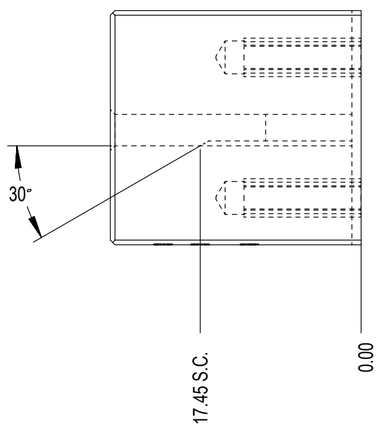

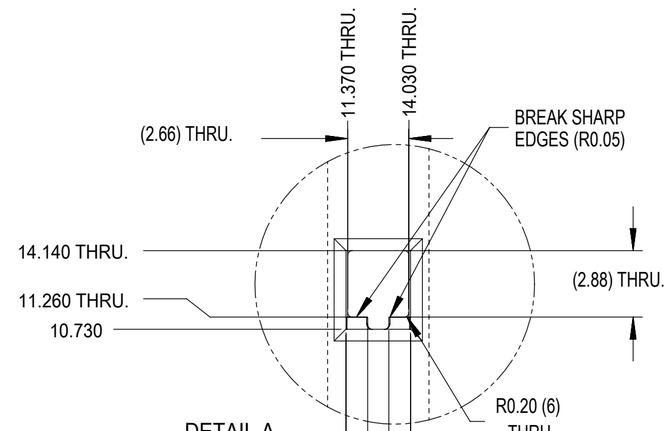

DETAIL A
SCALE 5:1

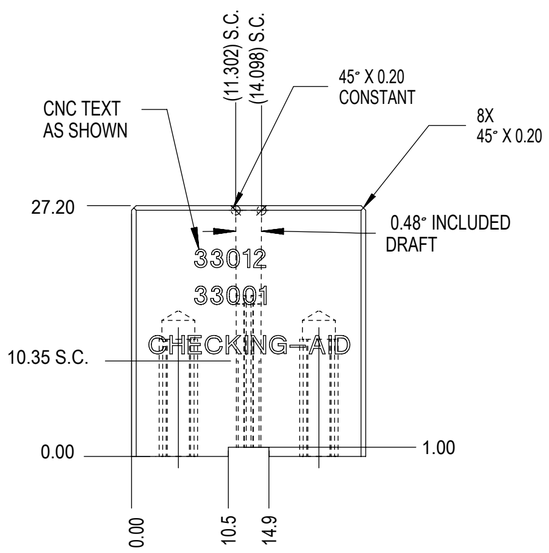

CHECKING - AID
UPPER

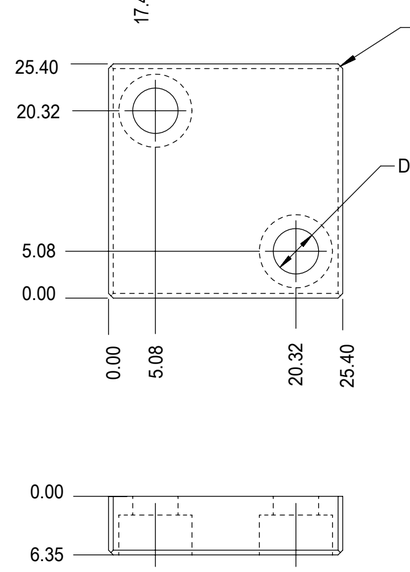

CHECKING - AID
LOWER

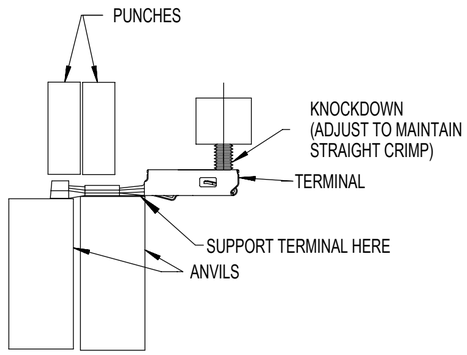

CRIMP REQUIREMENTS:

1. CRIMP STRAIGHTNESS MUST BE MAINTAINED
   USE A KNOCKDOWN TOOL LOCATED AS SHOWN
   TERMINAL BOX MUST NOT BE DEFORMED

2. AFTER CRIMPING, THE CRIMPED TERMINAL (AND UP TO 5 mm
   OF WIRE PAST THE INSULATOR CUTOFF TAB) MUST FIT FREELY
   INTO THE CHECKING-AID SHOWN ON THIS PAGE

3. FOR OTHER MECHANICAL REQUIREMENTS ON CRIMPED
   TERMINALS, REFER TO SAE/USCAR-21 (5-13-02)
   SECTIONS 4.2 (VISUAL INSPECTION), 4.2 (CROSS SECTION
   ANALYSIS) AND 4.4 (CONDUCTOR CRIMP PULLOUT FORCE)

UPPER & LOWER
CHECKING-AID
A2 TOOL STEEL
HARDEN & GRIND
ROCKWELL "C" 56-58

THIS DRAWING CONTAINS INFORMATION THAT IS PROPRIETARY TO MOLEX ELECTRONIC TECHNOLOGIES, LLC AND SHOULD NOT BE USED WITHOUT WRITTEN PERMISSION

SYMBOLS	
E/A = 0	
E/C = 0	
E/P = 0	
S = 0	
▼ = 0	
C = 0	
☒ = 0	
■ = 0	
V = 0	

DIMENSION UNITS	SCALE
mm	2:1

GENERAL TOLERANCES (UNLESS SPECIFIED)

ANGULAR TOL	± 3.0 °
4 PLACES	±
3 PLACES	±
2 PLACES	± 0.10
1 PLACE	± 0.3
0 PLACES	±

DRAFT WHERE APPLICABLE MUST REMAIN WITHIN DIMENSIONS

CURRENT REV DESC:

EC NO: 645050
DRWN: BSKANTHARAJU 2020/09/03
CHK'D: JCUATACERVAN 2020/09/18
APPR: JCUATACERVAN 2020/09/18

INITIAL REVISION:
DRWN: LPULLIAM 2005/06/21
APPR: BMOSER 2005/06/22

THIRD ANGLE PROJECTION | DRAWING: C-SIZE | SERIES: 33012

molex

MX150
RECEPTACLE TERMINAL

PRODUCT CUSTOMER DRAWING

DOCUMENT NUMBER	DOC TYPE	DOC PART	REVISION
SD-33012-002	PSD	001	D

MATERIAL NUMBER	CUSTOMER	SHEET NUMBER
SEE TABLE	GENERAL MARKET	3 OF 5

DOCUMENT STATUS	P1	RELEASE DATE	2020/09/18 18:32:02

FORMAT: master-tb-prod-C
REVISION: H
DATE: 2018/01/18

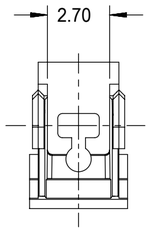

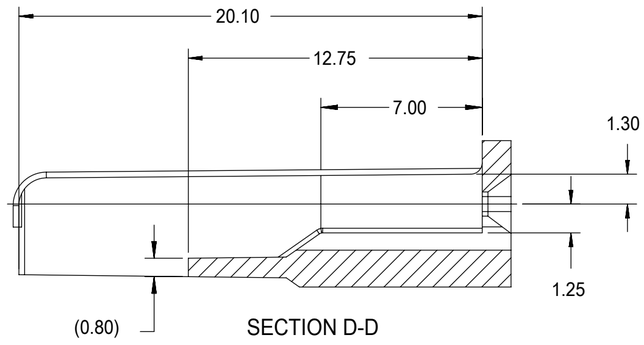

SECTION D-D

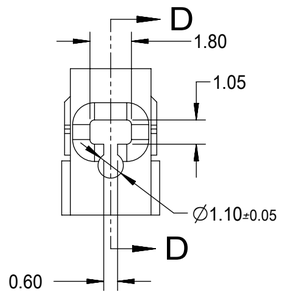

NOTES: UNLESS OTHERWISE SPECIFIED

1. TOLERANCES: LINEAR ±0.10
   ANGULAR ±3°
2. ALL DRAFT WITHIN TOLERANCE.
3. MAX RADII ON ALL CORNERS SHOWN SHARP: 0.10
4. MAX FLASH PERMISSIBLE: 0.1
5. EJECTOR PIN MARKS PERMISSIBLE IF FLUSH TO 0.25 BELOW SURFACE.
6. MATERIAL: HOUSING/FINGER SPECIFICATION ENGINEERED FOR MATERIAL WITH THE FOLLOWING PROPERTIES:
   A. FLEXURAL MODULUS = 4,500 TO 9,400 MPa PER ASTM TEST D790
   B. ELONGATION AT YIELD = 2.3% OR BETTER PER ASTM TEST D638 TYPE V
7. CAVITY SPEC FOR USE ONLY WITH MOLEX RECEPTACLE TERMINAL PART NUMBERS SPECIFIED ELSEWHERE ON THIS DRAWING

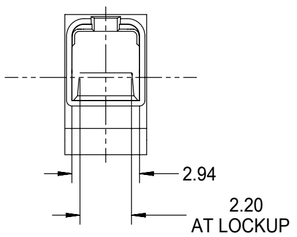

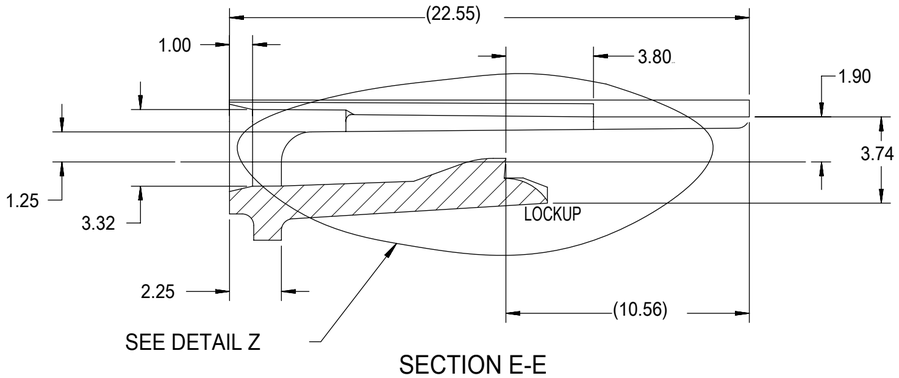

SECTION E-E

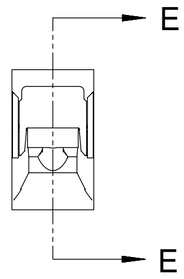

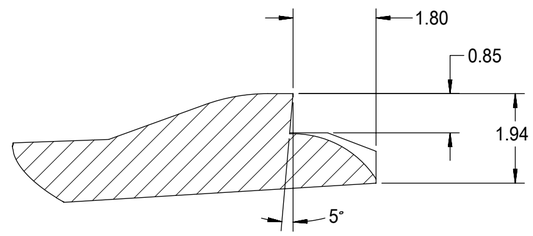

DETAIL Z
SCALE 20:1

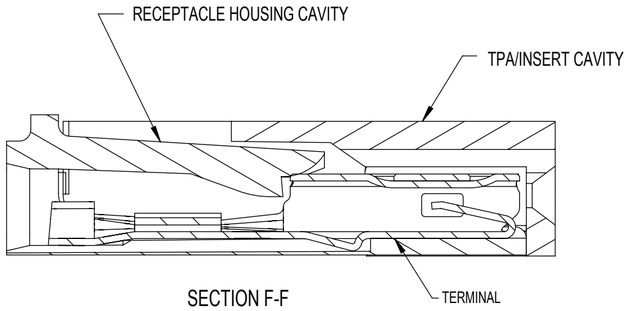

SECTION F-F

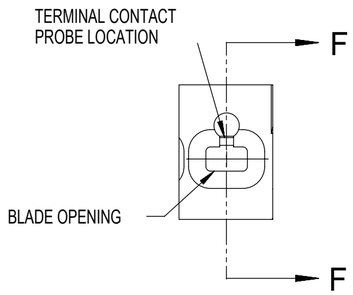

RECEPTACLE CAVITY ASSEMBLED VIEWS
FOR SMALL POLARIZATION RIB APPLICATIONS
FIG. 1

PREFERRED PROBING LOCATION
IS NOT ON SPRING MEMBER

IF ELECTRICAL CONTINUITY PROBE
TOUCHES SPRING MEMBER USE
PROBING AS SHOWN IN FIG. 2

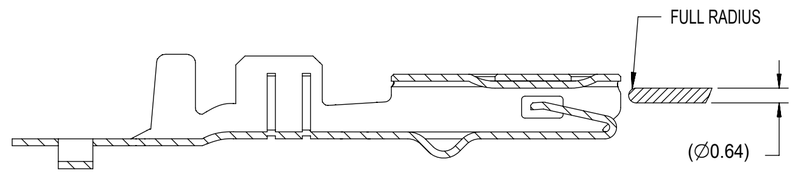

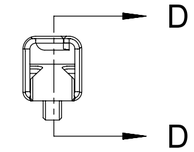

SECTION D-D
FOR LARGE POLARIZATION RIB APPLICATIONS
FIG. 2

PROBING DOWN THE
THROAT MUST USE
THIS TERMINAL PROBE

FOR PROBING INFORMATION REFERENCE
MOLEX MX150 APPLICATION SPEC AS-33472-100

SYMBOLS	
FA = 0	
FB = 0	
FP = 0	
S = 0	
= 0	
C = 0	
= 0	
= 0	
= 0	

DIMENSION UNITS	SCALE
mm	5:1

GENERAL TOLERANCES (UNLESS SPECIFIED)	
ANGULAR TOL	± 3.0 °
4 PLACES	±
3 PLACES	±
2 PLACES	± 0.10
1 PLACE	± 0.3
0 PLACES	±

DRAFT WHERE APPLICABLE MUST REMAIN WITHIN DIMENSIONS

THIS DRAWING CONTAINS INFORMATION THAT IS PROPRIETARY TO MOLEX ELECTRONIC TECHNOLOGIES, LLC AND SHOULD NOT BE USED WITHOUT WRITTEN PERMISSION

CURRENT REV DESC:

EC NO: 645050
DRWN: BSKANTHARAJU 2020/09/03
CHK'D: JCUATACERVAN 2020/09/18
APPR: JCUATACERVAN 2020/09/18

INITIAL REVISION:
DRWN: LPULLIAM 2005/06/21
APPR: BMOSER 2005/06/22

molex

MX150
RECEPTACLE TERMINAL

PRODUCT CUSTOMER DRAWING

DOCUMENT NUMBER	DOC TYPE	DOC PART	REVISION
SD-33012-002	PSD	001	D

THIRD ANGLE PROJECTION	DRAWING	SERIES	MATERIAL NUMBER	CUSTOMER	SHEET NUMBER
	C-SIZE	33012	SEE TABLE	GENERAL MARKET	4 OF 5

DOCUMENT STATUS	P1	RELEASE DATE	2020/09/18 18:32:02

FORMAT: master-tb-prod-C
REVISION: H
DATE: 2018/01/18

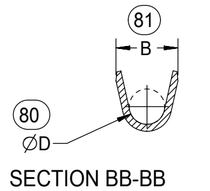

SECTION BB-BB

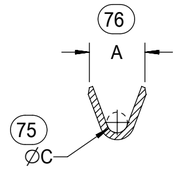

SECTION CC-CC

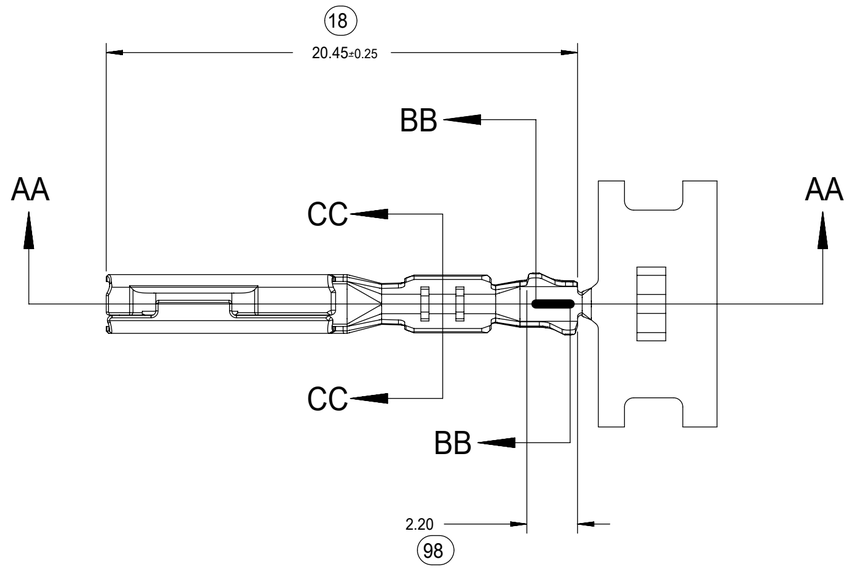

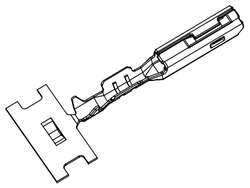

ISO VIEW
SCALE 2:1

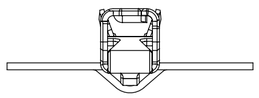

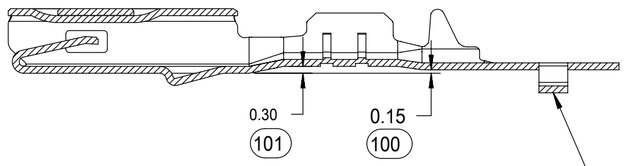

SECTION AA-AA
M3 GRIP CODE TERMINAL
SEE TABLE (SHEET 2) FOR PART NUMBERS

CARRIER BUMP DIRECTION
POINTS DOWN FOR TIN PLATED TERMINAL
POINTS UP FOR PRECIOUS METAL PLATED TERMINAL

SYMBOLS			
= 0			
= 0			
= 0			
= 0			
= 0			
= 0			
= 0			
= 0			
= 0			

THIS DRAWING CONTAINS INFORMATION THAT IS PROPRIETARY TO MOLEX ELECTRONIC TECHNOLOGIES, LLC AND SHOULD NOT BE USED WITHOUT WRITTEN PERMISSION

DIMENSION UNITS	SCALE
mm	5:1

GENERAL TOLERANCES (UNLESS SPECIFIED)

ANGULAR TOL	±	3.0 °
4 PLACES	±	
3 PLACES	±	
2 PLACES	±	0.10
1 PLACE	±	0.3
0 PLACES	±	

DRAFT WHERE APPLICABLE MUST REMAIN WITHIN DIMENSIONS

CURRENT REV DESC:

EC NO:	645050	
DRWN:	BSKANTHARAJU	2020/09/03
CHK'D:	JCUATACERVAN	2020/09/18
APPR:	JCUATACERVAN	2020/09/18

INITIAL REVISION:

DRWN:	LPULLIAM	2005/06/21
APPR:	BMOSER	2005/06/22

THIRD ANGLE PROJECTION

DRAWING	SERIES
C-SIZE	33012

molex

MX150
RECEPTACLE TERMINAL

PRODUCT CUSTOMER DRAWING

DOCUMENT NUMBER	DOC TYPE	DOC PART	REVISION
SD-33012-002	PSD	001	D

MATERIAL NUMBER	CUSTOMER	SHEET NUMBER
SEE TABLE	GENERAL MARKET	5 OF 5

DOCUMENT STATUS	P1	RELEASE DATE	2020/09/18	18:32:02

FORMAT: master-tb-prod-C
REVISION: H
DATE: 2018/01/18