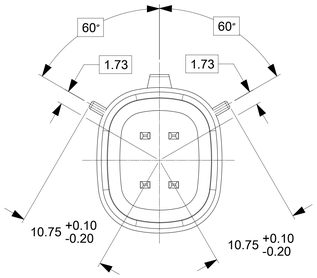

KEYING OPTION A
SCALE 4:1

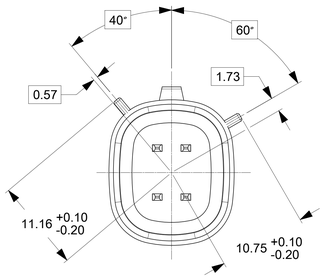

KEYING OPTION B
SCALE 4:1

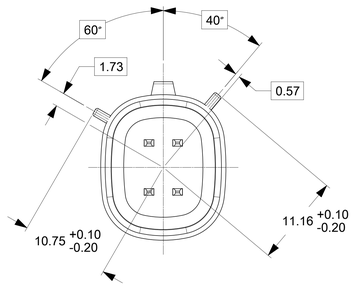

KEYING OPTION C
SCALE 4:1

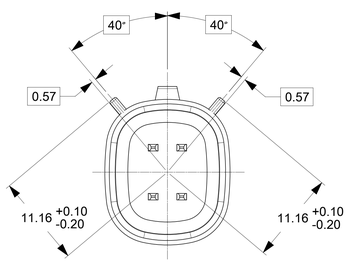

KEYING OPTION D
SCALE 4:1

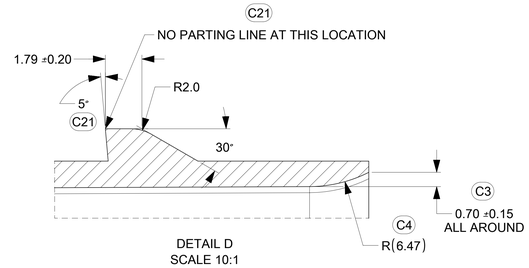

DETAIL D
SCALE 10:1

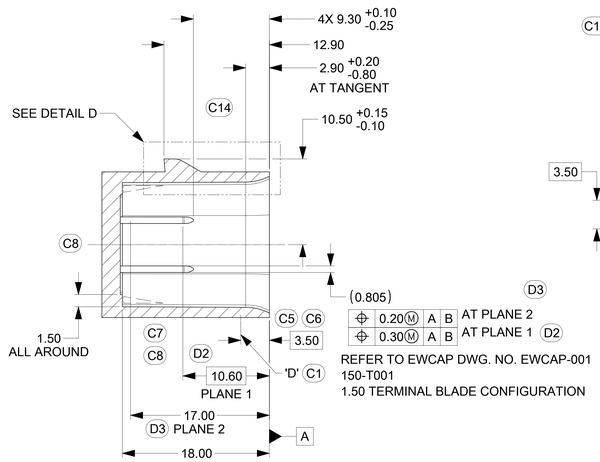

REFER TO EWCAP DWG. NO. EWCAP-001
150-T001
1.50 TERMINAL BLADE CONFIGURATION

SECTION A-A

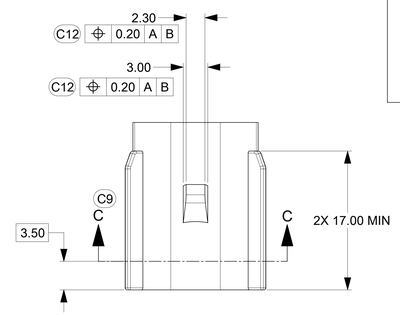

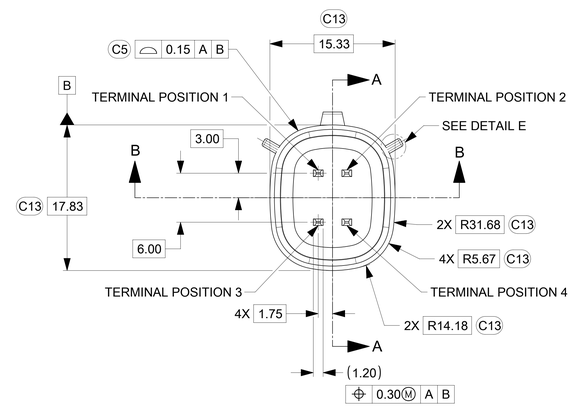

REFER TO EWCAP DWG. NO. EWCAP-001
150-T001
1.50 TERMINAL BLADE CONFIGURATION

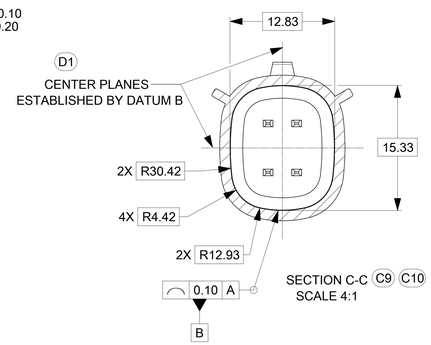

SECTION C-C C9 C10
SCALE 4:1

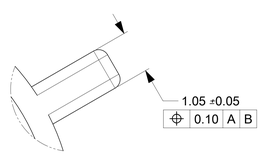

DETAIL E
SCALE 20:1
APPLIES 2X
SEE KEYING OPTION VIEWS
FOR POSITIONS

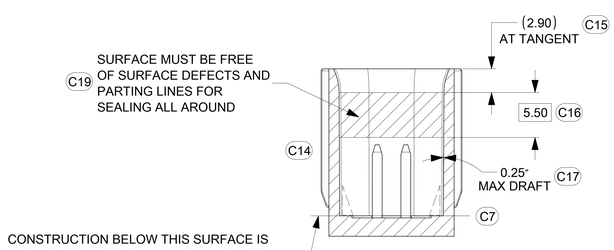

SECTION B-B

IF HEADER IS RECESSED INTO A POCKET. THESE DIMENSIONS REPRESENT
THE MINIMUM CLEARANCE REQUIRED FOR THE MATING CONNECTOR SHROUD.

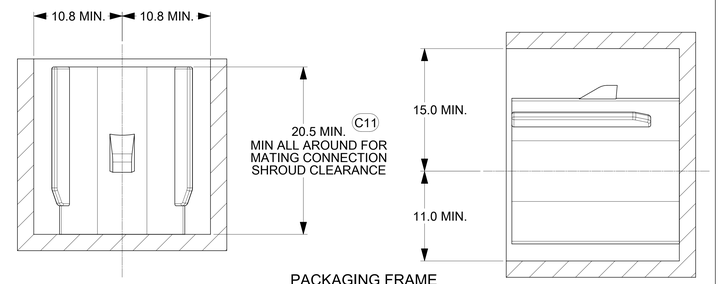

PACKAGING FRAME

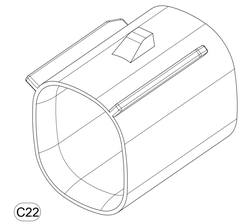

STANDARD NOTICE D4 C20

This drawing, or portions of it are controlled by the Electrical Wiring Components Application Partnership (EWCAP) a subgroup of the United States Council for Automotive Research LLC (USCAR LLC).
USCAR is an LLC consisting of members from FCA US LLC, Ford Motor Company and GM Corporation. Any change to a EWCAP controlled portion of this drawing, including a revision record change must be approved, in writing, by the responsible EWCAP representative from each USCAR member company.
Each EWCAP representative authorized to sign for his or her member company is responsible for obtaining all necessary approvals within that company prior to signing for the approval of the change.
EWCAP expressly prohibits any party from changing either any EWCAP controlled portion of this drawing or any associated tooling before receiving approval, signed by the authorized representatives, of the USCAR member companies. Reference to the signed change notice must be entered in the drawing control column.

NOTES: UNLESS OTHERWISE SPECIFIED C18

1. ALL DIMENSIONS SHOWN IN MILLIMETERS.
2. DIMENSIONING AND TOLERANCING PER ASME Y14.5M-2009 D5
3. 0.25 RADII ON ALL CORNERS SHOWN SHARP.
4. UNSPECIFIED RADII: 0.25 EXCEPT AS NOTED.
5. STANDARD COLORS FOR POLARIZATION (SEE CHART). DEVIATION REQUIRES APPROVAL OF AUTHORIZED PERSON.
6. REFER TO "SAE/USCAR 12 CONNECTOR GUIDELINES" FOR ADDITIONAL REQUIREMENTS.
7. EXCEPT WHERE NOTED, DRAFT ON OUTSIDE SURFACES IS PERMISSIBLE WITHIN TOLERANCE.
8. SYMBOL INDICATES DRAFT DIRECTION.
9. FOR TERMINAL MATERIAL, DIMENSIONAL, AND COATING REQUIREMENTS AND ANY BLADE TERMINAL DESIGN INFORMATION NOT SHOWN ON THIS DRAWING SEE EWCAP DRW. NO. EWCAP-001
10. A FULL SHROUD ON THE MATING CONNECTOR IS REQUIRED TO INSURE THAT THE CONNECTOR-HEADER POLARIZATION FEATURES (OPTIONS A THRU D) WILL FUNCTION. THE FULL SHROUD ALSO PREVENTS SCOOP DAMAGE TO THE HEADER PINS. REFER TO "SAE/USCAR-12 CONNECTOR DESIGN GUIDE LINES" FOR ADDITIONAL INFORMATION.
11. REFER TO USCAR/EWCAP PART LIST AS FOUND ON WEBSITE http://www.uscarteams.org
12. THIS IS A 100% CAD GENERATED PART. THE CAD MATHEMATICAL DATA IS THE MASTER FOR THIS PART. FOR DIMENSIONAL OR ANY INFORMATION NOT SHOWN ON THIS DRAWING, ANALYZE THE CAD MODEL.

132	D5	UPDATED CALL OUT FOR THE REVISION OF GD&T FROM ASME Y14.5-1994 TO Y14.5-2009			
132	D4	UPDATED THE STANDARD NOTICE TO THE LATEST TEMPLATE			
132	D3	ADDED PLANE 2			
132	D2	ADDED PLANE 1			
132	D1	ADDED CALL OUT "CENTER PLANES ESTABLISHED BY DATUM B"	04-24-17	MV	KB
095	C22	CHANGED ISO VIEW SCALE TO 4:1, WAS 1:1			
095	C21	ADDED PARTING LINE NOTE TO DETAIL A, REMOVED NOTE BACK ANGLE OPTIONAL FROM 5°			
095	C20	CORRECTED CHRYSLER GROUP LLC NOMENCLATURE ADDED LEGAL NOTE AND EWCAP TO TITLE BLOCK			
095	C19	MOVED NOTE TO SECTION B-B			
095	C18	UPDATED NOTES			
095	C17	ADDED 0.25° MAX DRAFT ANGLE ALL AROUND			
095	C16	ADDED 5.50			
095	C15	ADDED AT TANGENT NOTE			
095	C14	REMOVED DATUM D			
095	C13	ADDED BASIC DIMENSIONS FOR PROFILE CONTROL			
095	C12	ADDED 0.20 A B			
095	C11	DIMENSION TO DATUM A			
095	C10	SEALING SURFACE DIMENSIONS MOVED TO SECTION C-C			
095	C9	ADDED SECTION C-C			
095	C8	REMOVED 15.20 AND 2.50 FROM SECTION A-A			
095	C7	ADDED DRAFT ANGLE DIRECTION			
095	C6	REMOVED 0.80 +0.10/-0.20 ALL AROUND			
095	C5	REPLACED WALL THICKNESS CONTROL WITH PROFILE OF A SURFACE			
095	C4	ADDED R(6.47)			
095	C3	ADDED 0.70±0.15 ALL AROUND			
095	C2	UPDATED CONNECTOR COLORS			
095	C1	SURFACE 'D' RELOCATED TO 3.50 WAS AT 8.20			
	B3	REMOVED EWCAP FROM THE TITLE BLOCK			
	B2	REMOVED LEGAL NOTICE			
	B1	ANGEL 40° WAS 60° -4 PLACES (A4-D4)	03-26-12	KC	MV
	A	RELEASED	10-31-02	MV	DG
CHANGE SERIAL NUMBER	LET	REVISION RECORD	DATE	DWN	CHK

150-S-004-2-D02	D	BLACK
150-S-004-2-C02	C	DK GRAY
150-S-004-2-B02	B	LT GRAY
150-S-004-2-A02	A	BLACK
EWCAP P/N	OPTION	MATING CONNECTOR COLOR

C2

TOLERANCES (UNLESS OTHERWISE SPECIFIED)
DIMENSIONS ARE IN MILLIMETERS
ANGLES ±3°
.X ±0.2 .XX ±0.10

THIRD ANGLE PROJECTION

EWCAP

SCALE	DRAWN BY	CHECKED BY	DATE
4 - 1	K. CUNNINGHAM	M.VANSLAMBROUCK	03-26-12

TITLE
DIRECT CONNECT INTERFACE
4 WAY (2 X 2) 1.5MM SEALED MALE

SHEET	DRAWING NUMBER	SIZE		REVISION LEVEL
OF 1	150-S-004-2-Z02	E	DO NOT SCALE DRAWING COMPUTER AIDED DRAWING	D

TABLE OF CONTENTS

SHEET NO.	SHEET DESCRIPTION
1	NOTES AND BOM
2	CONFIGURATIONS
3-4	KEY CONFIGURATIONS
5	RECEPTACLE CONNECTOR ASSEMBLY
6	BACKSHELL NOTES
7-8	BACKSHELL
9-10	BACKSHELL CONFIGURATIONS
11	2X10 CONNECTOR INTERFACE DEFINITION

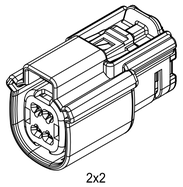

2x2

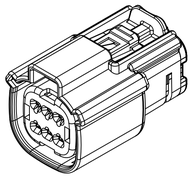

2x3

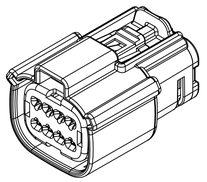

2x4

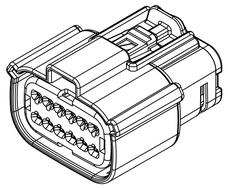

2x6

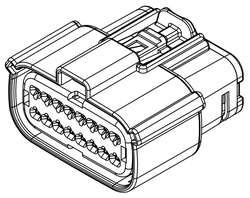

2x8

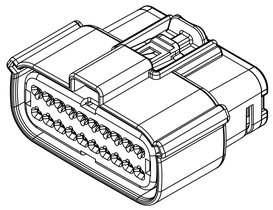

2x10

NOTES: VALID UNLESS OTHERWISE SPECIFIED

1. GENERAL:

a. APPLICATION SPECIFICATION SEE: AS-33472-100
- -CONTAINS: PRODUCT INTRODUCTION, PRODUCT SUMMARY, CONNECTOR ASSEMBLY, PACKAGING INFORMATION, CONNECTOR MATING, SERVICE INSTRUCTIONS, ELECTRICAL CONTINUITY CHECKING, CRIMPING, AND TROUBLESHOOTING.
- -DESIGNED TO MATE WITH DEVICE OR CONNECTOR AS SPECIFIED IN THE MATING INTERFACE/CONNECTOR DRAWINGS CHART.
- *DENOTES DRAWINGS THAT CAN BE ACCESSED AT <http://ewcap.uscarteams.org/>.
- -ASSEMBLY SHIPPED WITH PLR IN PRE-LOCK POSITION (SEE PLR PRE-LOCK VIEW SHEET 5).

b. PRODUCT SPECIFICATION SEE:
- -STANDARD CONFIGURATION (STD): PS-33472-000
- C8 - MID-VOLT CONFIGURATION : PS-33472-000
- -TRANSMISSION CONFIGURATION (TRNS):
  - CONTAINS SILICONE: TS-160038-0001
  - SILICONE FREE: TBD
- -UL V0 CONFIGURATION (UL V0): PS-160074-0001
  - CONTAINS: PRODUCT INTRODUCTION, PRODUCT SUMMARY, RATINGS (CURRENT, TEMPERATURE, SEALING, AND FLAMMABILITY), TERMINALS, WIRE DIAMETER RANGE, PRODUCT VALIDATION, AND PRODUCT DEVIATIONS.

c. PACKAGING SPECIFICATION PER MOLEX DRAWING: SEE PACKAGING CHART

d. PARTS MUST BE IN COMPLIANCE TO MOLEX CHEMICAL SUBSTANCES FOR PRODUCTS AND PACKAGING SPECIFICATION: QEHS-699000-301

e. DATA MUST BE SUBMITTED UNDER THE MOLEX PART NUMBER TO IMDS (COMPANY ID#13255)

2. DESIGN - MATERIALS:

a. FOR BILL OF MATERIALS SEE:
- -STANDARD CONFIGURATION SD-33472-0002
- -TRANSMISSION CONGURATION
  - CONTAINS SILICONE: SD-160038-0002
  - SILICONE FREE: SD-160092-0002
- -UL V0 CONFIGURATION SD-160074-0002
- C8 - MID-VOLT CONFIGURATION SD-300361-0002

b. TRANSMISSION CONNECTOR COMPONENTS MUST MEET THE MATERIAL REQUIREMENTS SPECIFIED IN TS-160038-0001 & TBD

3. DESIGN - GEOMETRY:

a. THE 3-D CAD DATA IS BASIC (WITHOUT TOLERANCE) AND MASTER FOR THIS PART WITH THE EXCEPTION OF UNDERLINED DIMENSIONS. DIMENSIONAL INFORMATION NOT SHOWN ON THIS DRAWING IS DEFINED BY THE DATA FILE AT ITS LATEST REVISION.

b. GEOMETRIC DIMENSIONS AND TOLERANCES PER ASME Y14.5M-2009

c. EDGES AND UNDIMENSIONED DETAILS PER ISO13715

d. CORNERS SHOWN AS SHARP TO BE R 0.2 MAX.

e. LETTERING SHALL BE 0.15 MAX RAISED IN 0.25 MAX RECESS PAD. THIS INCLUDES RECYCLING CODE, CAVITY ID, VENDOR IDENTIFICATION, AND CUSTOMER MATERIAL NUMBER.

f. VISUAL DEFECTS SHALL MEET COSMETIC STANDARD PS-45499-002 (Class B).

g. LASER MARKING:
1. PART NUMBER
2. DAY OF THE YEAR
3. SHIFT
4. YEAR

FOR ADDITIONAL INFORMATION SEE SECTION 5 UNDER PROCEDURES IN ES-34735-008.

h. 2X2 CLIP-SLOT DESIGN IS BASED ON USCAR/EWCAP 7mm CLIP SLOT EWCAP - 005 - 7
2X3 THRU 2X10 CLIP-SLOT DESIGN IS BASED ON USCAR/EWCAP 11mm CLIP SLOT EWCAP - 005 - 11

PACKAGING

DESCRIPTION	DRAWING NO.
C9 2X2	PK-31300-903
2X3	PK-31300-903
2X4	PK-31300-903
2X6	PK-31300-903
2X8	PK-31300-903
2X10	PK-31300-903

MATING INTERFACE/CONNECTOR DRAWINGS

DESCRIPTION	INTERFACE DEFINITION	MOLEX INLINE
STANDARD 2X2	*150-S-004-2-Z02	SD-33482-0001
UL V0 2X2	*150-S-004-2-Z02	SD-33482-0001
C8 MID-VOLT 2X2	*150-S-004-2-Z02	SD-33482-0001
STANDARD 2X3	*150-S-006-2-Z02	SD-33482-0001
TRANSMISSION 2X3	*150-S-006-2-Z02	N/A
C8 MID-VOLT 2X3	*150-S-006-2-Z02	SD-33482-0001
STANDARD 2X4	*150-S-008-2-Z02	SD-33482-0001
UL V0 2X4	*150-S-008-2-Z02	SD-33482-0001
STANDARD 2X6	*150-S-012-2-Z01	SD-33482-0001
UL V0 2X6	*150-S-012-2-Z01	SD-33482-0001
TRANSMISSION 2X6	*150-S-012-2-Z01	N/A
STANDARD 2X8	*150-S-016-2-Z01	SD-33482-0001
STANDARD 2X10	SD-33472-0001	SD-33482-0001
UL V0 2X10	SD-33472-0001	SD-33482-0001
C8 MID-VOLT 2X10	SD-33472-0001	SD-33482-0001

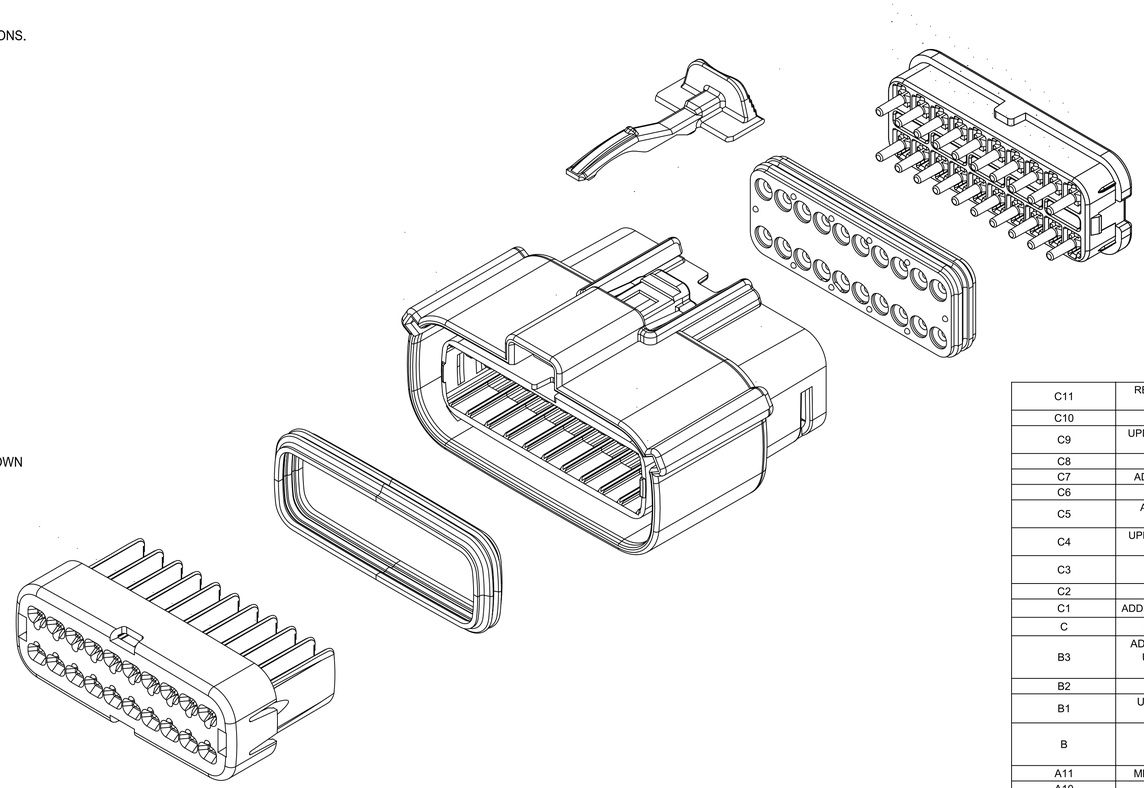

C11	REMOVED "NOT VALIDATED" TEXT FROM SHEET 11
C10	ADDED RELIEF SLOT - CANCELLED
C9	UPDATE 2X2 PACKAGING DRAWING NO. ON SHEET 1
C8	ADDE MID-VOLT VERSION ASSY.
C7	ADDED TRANSMISSION 2X6 IN APPENDIX
C6	CORRECTED 2X6 UL V0 DIM "J"
C5	ADDED UL V0 VERSION PRODUCT "PS" INFORMATION
C4	UPDATED GENERAL TOLERANCES IN TITLE BLOCK
C3	CORRECTED 2X2 DIM A AND D, CORRECTED 2X4 DIM D
C2	ADDED MOLEX BACKSHELL DETAILS
C1	ADDED 2X6-TRNS.-WITH/WITHOUT CLIPSLOT *
C	ADDED 2X10-STD.-WITH CLIPSLOT *
B3	ADD ROW FOR 2X6 V0 ON SHEET 5DIM3# UPDATE TO 25.0 MAX FOR V0DIM11# UPDATE TO 33.85 MAX FOR V0
B2	ADD 2X6 UL V0 CONFIGURATIONS
B1	UPDATE 2X6 W/O CLIPSLOT DIM G ON TABLE OF SHEET 5
B	ADDED 2X2 - STD- WITH CLIPSLOT, 2X8 - STD- WITH CLIPSLOT AND NOTE h
A11	MINOR GEOMETRY CHANGE FOR UL V0
A10	UPDATED 2X4 DRAWING NUMBER
A9	UPDATED 2X10 PART NUMBERS
A8	UPDATED 2X3 DRAWING NUMBER
A7	UPDATED 2X10 INTERFACE
A6	ADDED TRANSMISSION REFERENCES
A5	ADD 2X10 INTERFACE SHEETS
A4	ADD UL V0 CONFIGURATIONS
A3	ADDED 2X3 STD AND TRANSMISSION
A2	UPDATED 2X8 BLD DRAWINGS
A1	FIXED TYPO IN NOTE 1a, UPDATED 2X6 MOLEX INLINE BLADE DRAWING
A	INITIAL RELEASE
REV	REV DESCRIPTION

INSPECTION NUMBER LOG
LAST NUMBER: 11 ADDED: 11 REMOVED:

THIS DRAWING CONTAINS INFORMATION THAT IS PROPRIETARY TO MOLEX ELECTRONIC TECHNOLOGIES, LLC AND SHOULD NOT BE USED WITHOUT WRITTEN PERMISSION

FUNCTIONAL SYMBOLS: F/A = 0, F/C = 0, F/P = 0

DIVISIONAL SYMBOLS

DIMENSION UNITS	SCALE
MM	1:1

GENERAL TOLERANCES (UNLESS SPECIFIED)

ANGULAR TOL	± 1°
4 PLACES	±
3 PLACES	±
2 PLACES	± 0.100
1 PLACE	± 0.20
0 PLACES	±

DRAFT WHERE APPLICABLE MUST REMAIN WITHIN DIMENSIONS

CURRENT REV DESC: SEE REVISION TABLE

STATUS: Production

DRWN:	Yuki Song	2025-07-16
CHK'D:	Elvis Song	2025-07-17
APPR:	Isong05	2025-07-17

THIRD ANGLE PROJECTION

DRAWING	SERIES
A1-SIZE	33472

molex

MX150 RCPT
DUAL ROW SEALED ASSEMBLY

PRODUCT CUSTOMER DRAWING

DOCUMENT NUMBER	DOC TYPE	DOC PART	REVISION
SD-33472-0001	PSD	001	C11

MATERIAL NUMBER	CUSTOMER	SHEET NUMBER
	GENERAL MARKET	1 OF 11

SHEET DESCRIPTION

CONFIGURATIONS

C8

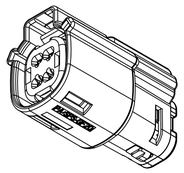

2X2 - STD.
2X2 - TRNS. - SILICONE FREE
2X2 - MID-VOLT

B

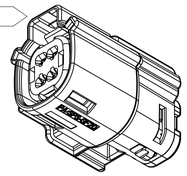

2X2 - STD. - WITH CLIPSLOT *

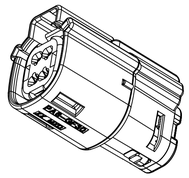

† 2X2 - UL V0

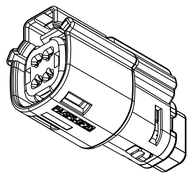

2X2 - STD. - LENGTHENED

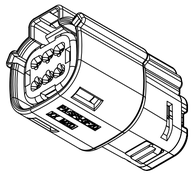

2X3 - STD.
2X3 - TRNS. - CONTAINS SILICONE

C8

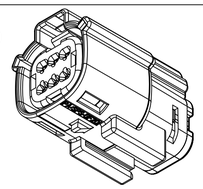

2X3 - STD. - WITH CLIPSLOT
2X3 - MID-VOLT. - WITH CLIPSLOT

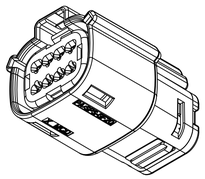

2X4 - STD.

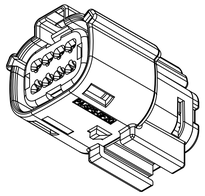

2X4 - STD. - WITH CLIPSLOT *

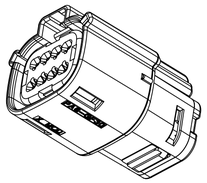

† 2X4 - UL V0

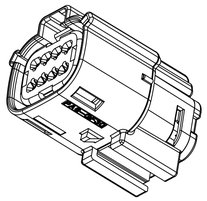

† 2X4 - UL V0-WITH CLIPSLOT*

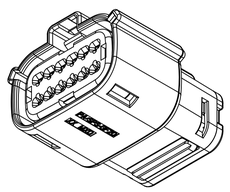

2X6 - STD.
C1 † 2X6 - TRNS.

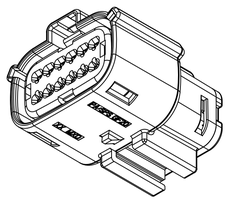

2X6 - STD. - WITH CLIPSLOT *
C1 † 2X6 - TRNS. - WITH CLIPSLOT *

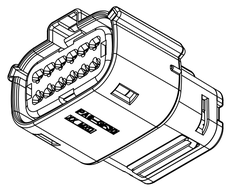

† 2X6 - UL V0

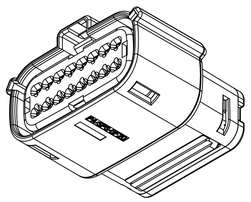

2X8 - STD.

B

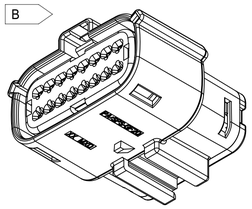

2X8 - STD. - WITH CLIPSLOT *

C8

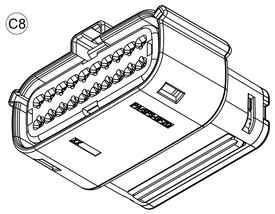

2X10 - STD.
2X10 - MID-VOLT.

C

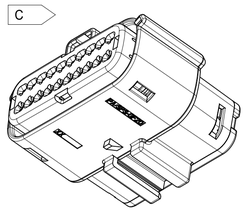

2X10 - STD. - WITH CLIPSLOT *

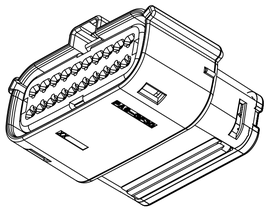

† 2X10 - UL V0

* WITH CLIPSLOT CONFIGURATION DOES NOT
MEET THE USCAR PACKAGING FRAME REQUIREMENTS
† MINOR GEOMETRY DIFFERENCE THAN STANDARD CONFIGURATION
SEE NOTES 1a & 2a-b FOR MORE INFORMATION

THIS DRAWING CONTAINS INFORMATION THAT IS PROPRIETARY TO MOLEX ELECTRONIC TECHNOLOGIES, LLC AND SHOULD NOT BE USED WITHOUT WRITTEN PERMISSION

FUNCTIONAL SYMBOLS	DIMENSION UNITS	SCALE	CURRENT REV DESC: SEE REVISION TABLE
FA = 0	MM	1:1	
FC = 0	GENERAL TOLERANCES (UNLESS SPECIFIED)		
FP = 0	ANGULAR TOL	± 1°	
DIVISIONAL SYMBOLS	4 PLACES	±	
	3 PLACES	±	
	2 PLACES	± 0.100	STATUS: Production
	1 PLACE	± 0.20	DRWN: Yuki Song 2025-07-16
	0 PLACES	±	CHK'D: Elvis Song 2025-07-17
	DRAFT WHERE APPLICABLE MUST REMAIN WITHIN DIMENSIONS		APPR: Isong05 2025-07-17

THIRD ANGLE PROJECTION	DRAWING	SERIES	MATERIAL NUMBER	CUSTOMER	SHEET NUMBER
	A1-SIZE	33472		GENERAL MARKET	2 OF 11

molex

MX150 RCPT
DUAL ROW SEALED ASSEMBLY

PRODUCT CUSTOMER DRAWING

DOCUMENT NUMBER	DOC TYPE	DOC PART	REVISION
SD-33472-0001	PSD	001	C11

FORMAT: 12.0original.A1
PACKAGE: 0
DATE: 2022/08/01

SHEET DESCRIPTION

KEY CONFIGURATIONS

2X2

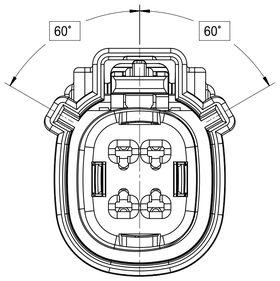

KEY A

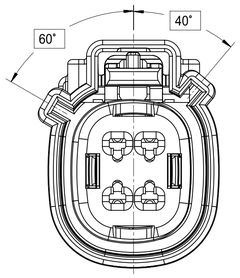

KEY B

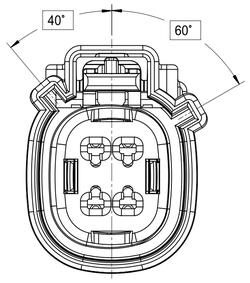

KEY C

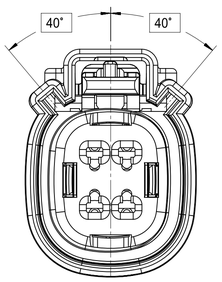

KEY D

2X3

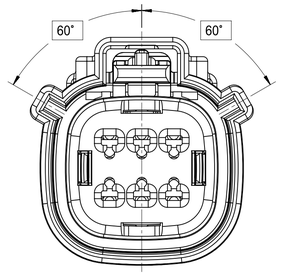

KEY A

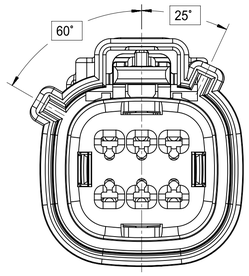

KEY B

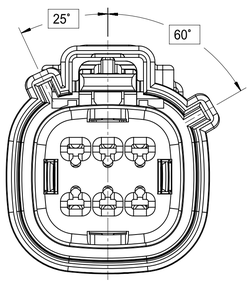

KEY C

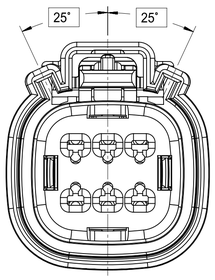

KEY D

2X4

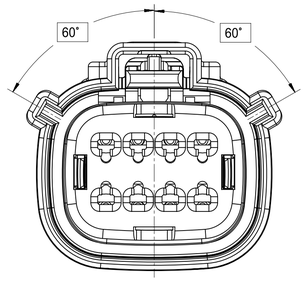

KEY A

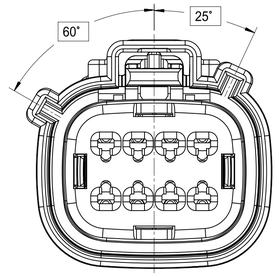

KEY B

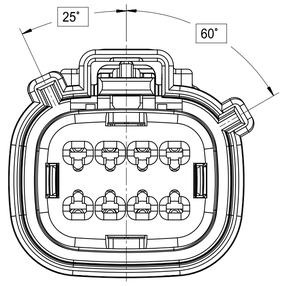

KEY C

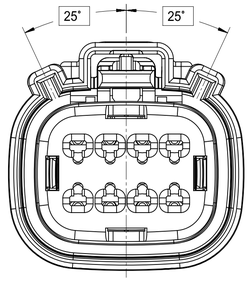

KEY D

FUNCTIONAL SYMBOLS		
FA = 0	DIMENSION UNITS	SCALE
	MM	1:1
FC = 0	GENERAL TOLERANCES (UNLESS SPECIFIED)	
	ANGULAR TOL	± 1˚
FP = 0	4 PLACES	±
DIVISIONAL SYMBOLS	3 PLACES	±
	2 PLACES	± 0.100
	1 PLACE	± 0.20
	0 PLACES	±
	DRAFT WHERE APPLICABLE MUST REMAIN WITHIN DIMENSIONS	

THIS DRAWING CONTAINS INFORMATION THAT IS PROPRIETARY TO MOLEX ELECTRONIC TECHNOLOGIES, LLC AND SHOULD NOT BE USED WITHOUT WRITTEN PERMISSION

CURRENT REV DESC: SEE REVISION TABLE

STATUS: Production

DRWN:	Yuki Song	2025-07-16
CHK'D:	Elvis Song	2025-07-17
APPR:	Isong05	2025-07-17

THIRD ANGLE PROJECTION

DRAWING: A1-SIZE

SERIES: 33472

molex

MX150 RCPT
DUAL ROW SEALED ASSEMBLY

PRODUCT CUSTOMER DRAWING

DOCUMENT NUMBER	DOC TYPE	DOC PART	REVISION
SD-33472-0001	PSD	001	C11

MATERIAL NUMBER	CUSTOMER	SHEET NUMBER
	GENERAL MARKET	3 OF 11

FORMAT: TC1drgtmpl4.f
REVISION: B
DATE: 2022/06/01

SHEET DESCRIPTION

KEY CONFIGURATIONS CONT.

2X6

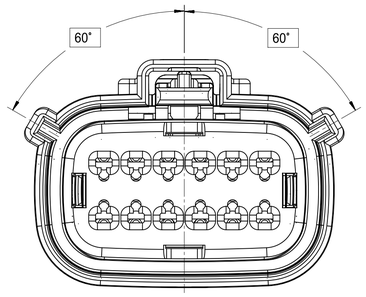

KEY A

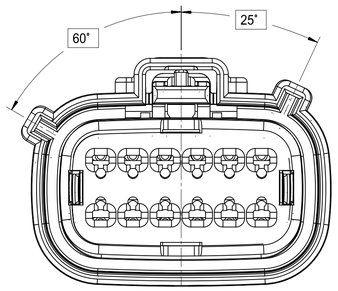

KEY B

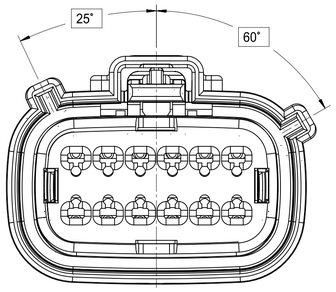

KEY C

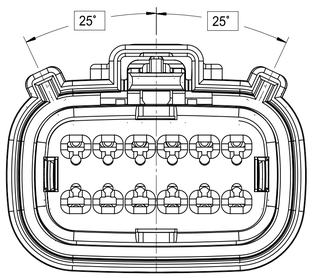

KEY D

2X8

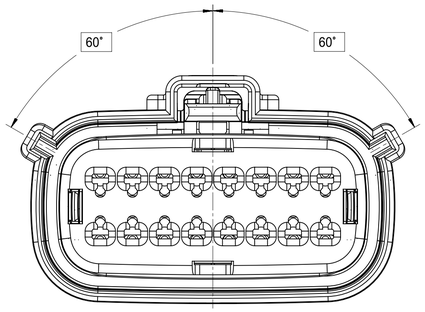

KEY A

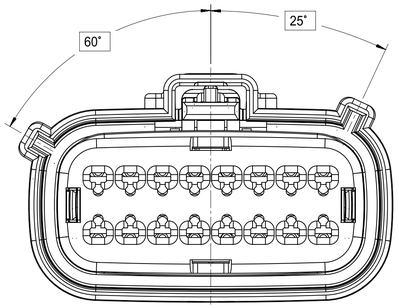

KEY B

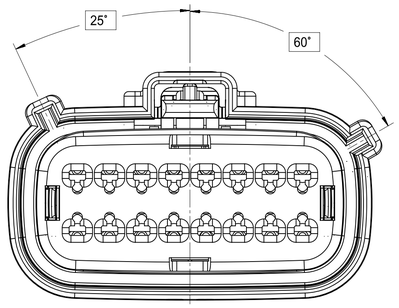

KEY C

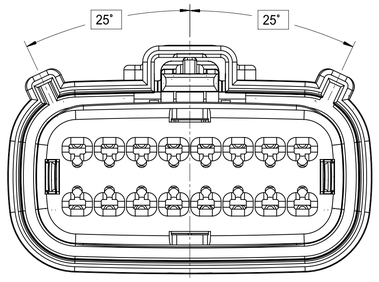

KEY D

2X10

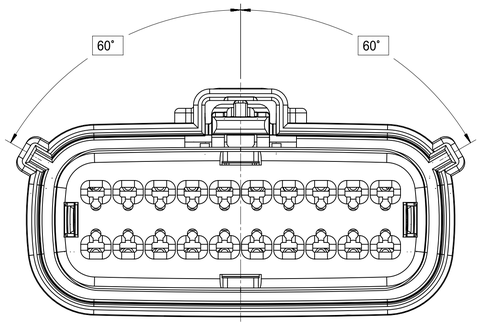

KEY A

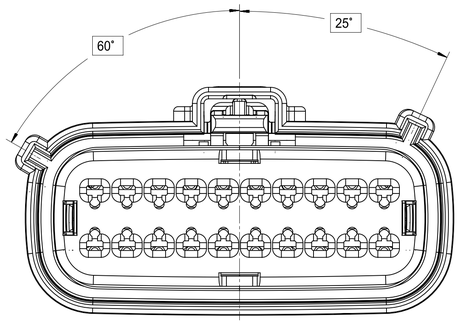

KEY B

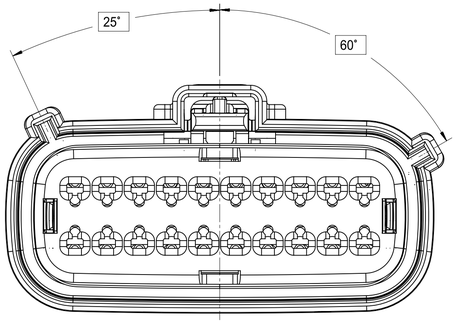

KEY C

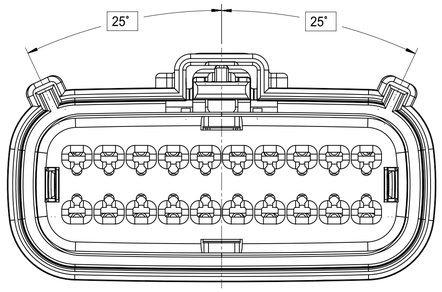

KEY D

THIS DRAWING CONTAINS INFORMATION THAT IS PROPRIETARY TO MOLEX ELECTRONIC TECHNOLOGIES, LLC AND SHOULD NOT BE USED WITHOUT WRITTEN PERMISSION

FUNCTIONAL SYMBOLS
FA = 0
FC = 0
FP = 0
DIVISIONAL SYMBOLS

DIMENSION UNITS	SCALE
MM	1:1
GENERAL TOLERANCES (UNLESS SPECIFIED)	
ANGULAR TOL	± 1˚
4 PLACES	±
3 PLACES	±
2 PLACES	± 0.100
1 PLACE	± 0.20
0 PLACES	±

DRAFT WHERE APPLICABLE MUST REMAIN WITHIN DIMENSIONS

CURRENT REV DESC: SEE REVISION TABLE

STATUS: Production
DRWN: Yuki Song 2025-07-16
CHK'D: Elvis Song 2025-07-17
APPR: Isong05 2025-07-17

THIRD ANGLE PROJECTION

DRAWING: A1-SIZE
SERIES: 33472

molex

MX150 RCPT
DUAL ROW SEALED ASSEMBLY

PRODUCT CUSTOMER DRAWING

DOCUMENT NUMBER	DOC TYPE	DOC PART	REVISION
SD-33472-0001	PSD	001	C11

MATERIAL NUMBER
CUSTOMER: GENERAL MARKET
SHEET NUMBER: 4 OF 11

FORMAT TEMPLATE
REVISION B
DATE 20220601

SHEET DESCRIPTION

RECEPTACLE CONNECTOR ASSEMBLY

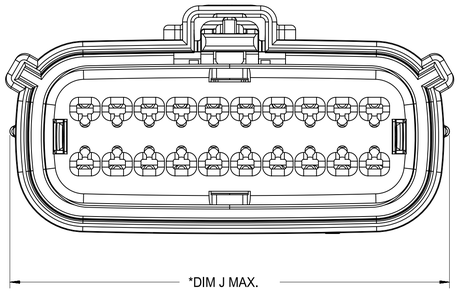

* APPLIES TO UL-V0 CONFIGURATIONS ONLY

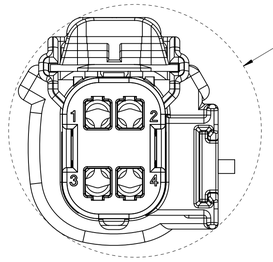

B APPLIES TO 2X2 - STD. - WITH CLIPSLOT ONLY

CHARTED DIMENSIONS

DESCRIPTION	DIMENSIONS							
	A	B	C	D	E	F	G	J
2X2 W/O CLIPSLOT	18.75	1.75	25.45	24.90	37.65	N/A	2.75±0.50	
2X2 W/ CLIPSLOT	18.75	1.75	27.65	24.90	37.65	N/A	2.75±0.50	
2X2 LENGTHENED	18.75	1.75	25.45	24.90	42.25	N/A	2.75±0.50	20.04
2X3 W/ CLIPSLOT	22.25	3.5	30.50	N/A	37.65	27.96	4.0±0.4	
2X3 W/O CLIPSLOT	22.25	3.5	26.24	24.90	37.65	N/A	4.0±0.4	
2X4 W/ CLIPSLOT	25.75	1.75	31.50	N/A	37.65	28.00	2.75±0.50	27.04
2X4 W/O CLIPSLOT	25.75	1.75	29.19	24.90	37.65	N/A	2.75±0.50	27.04
2X6 W/ CLIPSLOT	32.75	1.75	35.58	N/A	37.65	27.76	2.75±0.50	
C6 2X6 W/O CLIPSLOT	32.75	1.75	35.58	24.90	37.65	N/A	2.75±0.50	34.04
2X8 W/O CLIPSLOT	39.80	1.75	42.25	24.90	37.65	N/A	4.0±0.4	
2X8 W/ CLIPSLOT	39.80	1.75	42.25	N/A	37.65	27.80	4.0±0.4	
2X10 W/O CLIPSLOT	46.75	1.75	49.95	24.90	37.65	N/A	2.75±0.50	48.04
2X10 W/ CLIPSLOT	46.75	1.75	49.95	N/A	37.65	27.80	2.75±0.50	

LASER MARKING ON THIS SURFACE
SEE NOTE 3g.

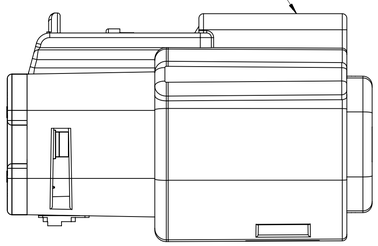

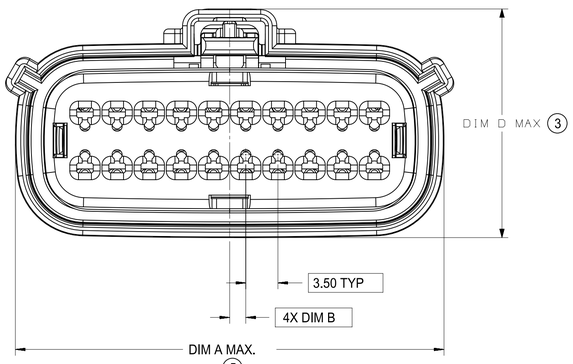

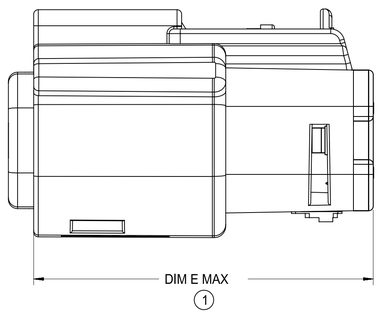

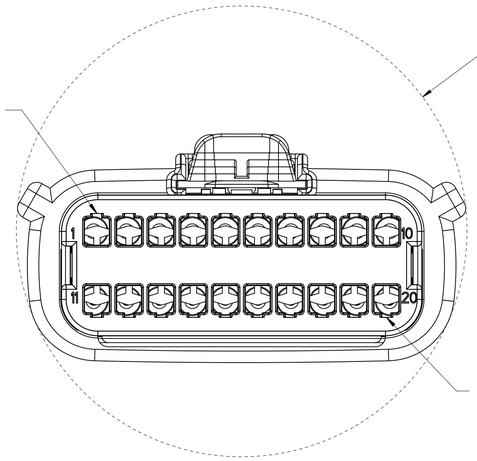

REAR VIEW
(WIRE HARNESS SIDE)

MOLD CAVITY I.D.
THIS LOCATION

MANUFACTURING LOCATION
CODE THIS LOCATION

RECYCLE CODE
THIS LOCATION

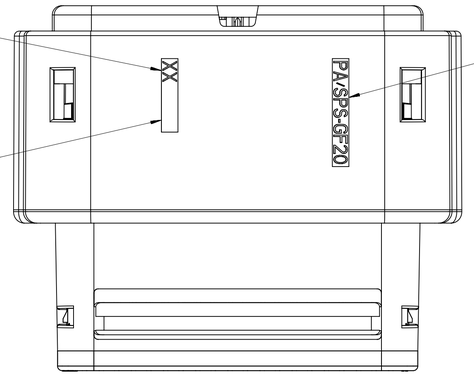

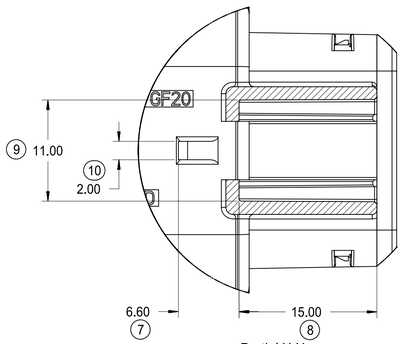

Partial X-X
SCALE 3:1

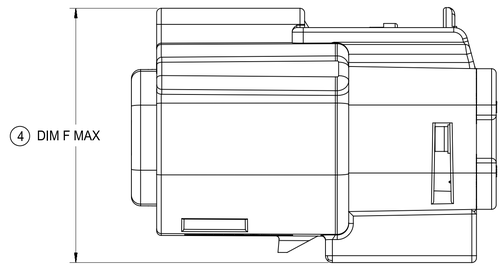

DIM G
6

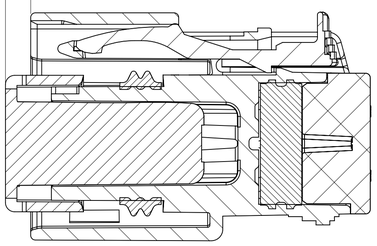

PRIMARY LOCK REINFORCEMENT (PLR) SHOWN
IN PRE-STAGED POSITION

SECTION Y-Y

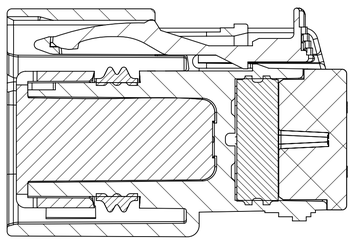

PRIMARY LOCK REINFORCEMENT (PLR) SHOWN
IN FINAL-LOCK POSITION

SECTION Z-Z

THIS DRAWING CONTAINS INFORMATION THAT IS PROPRIETARY TO MOLEX ELECTRONIC TECHNOLOGIES, LLC AND SHOULD NOT BE USED WITHOUT WRITTEN PERMISSION

FUNCTIONAL SYMBOLS	DIMENSION UNITS	SCALE
F A = 0	MM	1:1
F C = 0	GENERAL TOLERANCES (UNLESS SPECIFIED)	
F P = 0	ANGULAR TOL ± 1°	
DIVISIONAL SYMBOLS	4 PLACES ±	
	3 PLACES ±	
	2 PLACES ± 0.100	
	1 PLACE ± 0.20	
	0 PLACES ±	
	DRAFT WHERE APPLICABLE MUST REMAIN WITHIN DIMENSIONS	

CURRENT REV DESC: SEE REVISION TABLE

STATUS: Production
DRWN: Yuki Song 2025-07-16
CHK'D: Elvis Song 2025-07-17
APPR: Isong05 2025-07-17

THIRD ANGLE PROJECTION | DRAWING: A1-SIZE | SERIES: 33472

molex

MX150 RCPT
DUAL ROW SEALED ASSEMBLY

PRODUCT CUSTOMER DRAWING

DOCUMENT NUMBER	DOC TYPE	DOC PART	REVISION
SD-33472-0001	PSD	001	C11

MATERIAL NUMBER | CUSTOMER: GENERAL MARKET | SHEET NUMBER: 5 OF 11

FORMAT TC-Engineer-A1
REVISION: B
DATE: 2022/04/01

SHEET DESCRIPTION
BACKSHELL NOTES

BACKSHELL NOTES: VALID UNLESS OTHERWISE SPECIFIED

1. GENERAL:

a. APPLICATION SPECIFICATION SEE: AS-34951-001

-DESIGNED TO MATE WITH RECEPTACLE SEALED ASSEMBLY SPECIFIED IN MOLEX DRAWING SD-33472-0001.

-SYSTEM TO BE USED WITH WIRE WITHIN DIAMETER RANGE OF 1.2mm TO 2.69mm.

-COMPONENTS ARE OPTIONAL AND MUST BE PURCHASED SEPERATELY.

-DESIGN IS OWNED BY SCHLEMMER FOR SCHLEMMER BACKSHELL.

-DESIGN IS OWNED BY MOLEX FOR MOLEX BACKSHELL.

-90˚ ADAPTOR DESIGN IS OWNED BY MOLEX.

-FOR ADDITIONAL INFORMATION SEE THE BACKSHELL COMPONENT DRAWING SD-34951-0001.

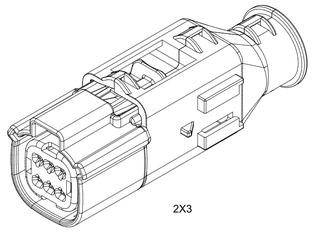

2X3

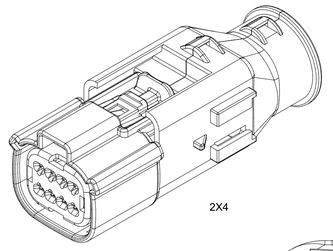

2X4

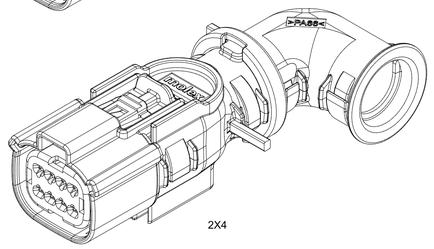

2X4

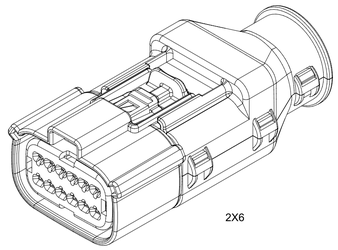

2X6

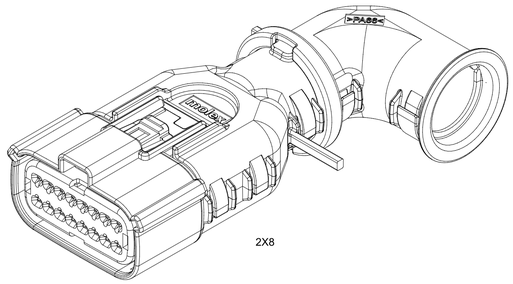

2X8

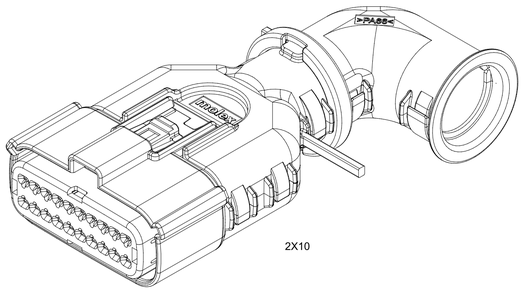

2X10

BACKSHELL CUSTOMER
MODEL NUMBER LEGEND

34951-XXXX

CUSTOMER MODEL COMPONENTS
- 0 - SCHLEMMER BACKSHELL ONLY
- 1 - SCHLEMMER BACKSHELL & MX150 HOUSING KEY A ASSEMBLY
- 2 - SCHLEMMER BACKSHELL & MX150 HOUSING KEY B ASSEMBLY
- 3 - SCHLEMMER BACKSHELL & MX150 HOUSING KEY C ASSEMBLY
- 4 - SCHLEMMER BACKSHELL & MX150 HOUSING KEY D ASSEMBLY
- 5 - MOLEX BACKSHELL ONLY
- 6 - MOLEX BACKSHELL & MX150 HOUSING KEY A ASSEMBLY
- 7 - MOLEX BACKSHELL & MX150 HOUSING KEY B ASSEMBLY
- 8 - MOLEX BACKSHELL & MX150 HOUSING KEY C ASSEMBLY
- 9 - MOLEX BACKSHELL & MX150 HOUSING KEY D ASSEMBLY

BACKSHELL FEATURES
- 1 - WITH RIBS
- 2 - WITHOUT RIBS
- 3 - 90˚ ADAPTOR

MX150 CIRCUIT SIZE 04, 06, 08, 12, 16, 20

90˚ ADAPTOR

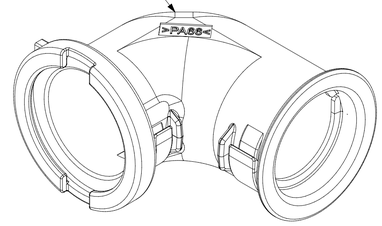

BACKSHELL (BKS)

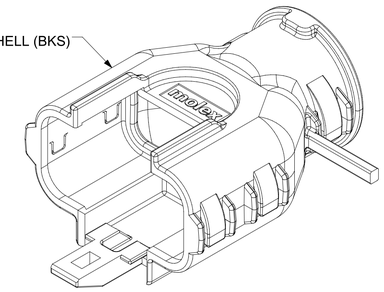

RECEPTACLE SEALED ASSEMBLY

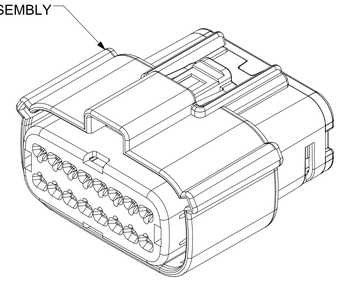

SCALE 2:1

FUNCTIONAL SYMBOLS	THIS DRAWING CONTAINS INFORMATION THAT IS PROPRIETARY TO MOLEX ELECTRONIC TECHNOLOGIES, LLC AND SHOULD NOT BE USED WITHOUT WRITTEN PERMISSION			
= 0	DIMENSION UNITS: MM	SCALE: 1.5:1	CURRENT REV DESC: SEE REVISION TABLE	molex
= 0	GENERAL TOLERANCES (UNLESS SPECIFIED)			MX150 RCPT DUAL ROW SEALED ASSEMBLY
= 0	ANGULAR TOL	± 1˚		
	4 PLACES	±		
DIVISIONAL SYMBOLS	3 PLACES	±	STATUS: Production	PRODUCT CUSTOMER DRAWING
	2 PLACES	± 0.100	DRWN: Yuki Song 2025-07-16	DOCUMENT NUMBER: SD-33472-0001 / DOC TYPE: PSD / DOC PART: 001 / REVISION: C11
	1 PLACE	± 0.20	CHK'D: Elvis Song 2025-07-17	
	0 PLACES	±	APPR: Isong05 2025-07-17	
	DRAFT WHERE APPLICABLE MUST REMAIN WITHIN DIMENSIONS		THIRD ANGLE PROJECTION / DRAWING: A1-SIZE / SERIES: 33472	MATERIAL NUMBER / CUSTOMER: GENERAL MARKET / SHEET NUMBER: 6 OF 11

SHEET DESCRIPTION
SCHLEMMER BACKSHELL

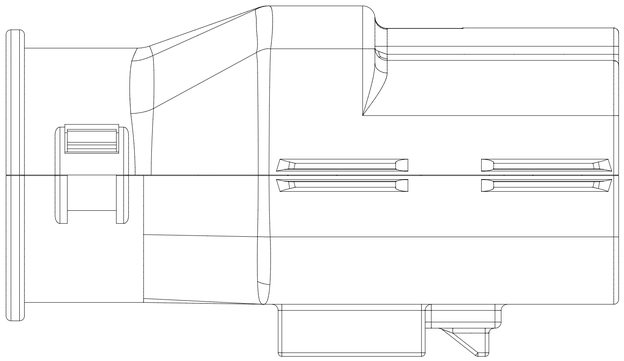

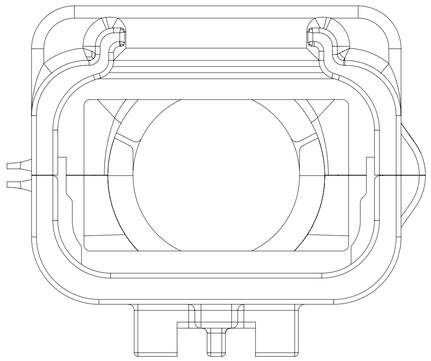

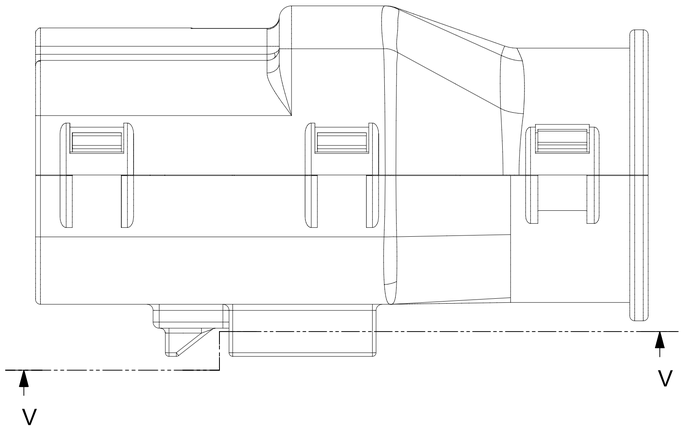

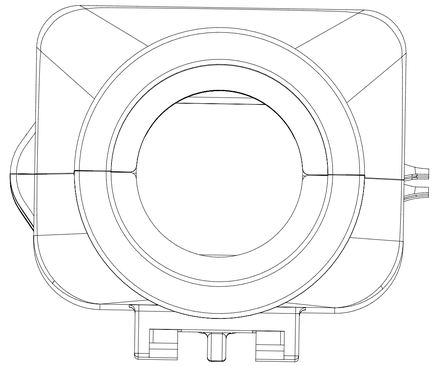

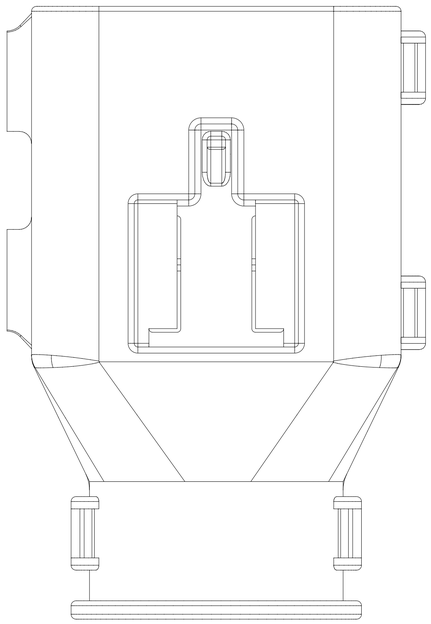

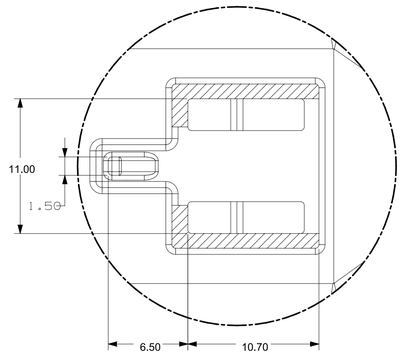

Partial V-V
SCALE 4:1

FUNCTIONAL SYMBOLS			
A = 0	DIMENSION UNITS	SCALE	
	MM	4:1	
C = 0	GENERAL TOLERANCES (UNLESS SPECIFIED)		
	ANGULAR TOL	±	1°
P = 0	4 PLACES	±	
DIVISIONAL SYMBOLS	3 PLACES	±	
	2 PLACES	±	0.100
	1 PLACE	±	0.20
	0 PLACES	±	
	DRAFT WHERE APPLICABLE MUST REMAIN WITHIN DIMENSIONS		

THIS DRAWING CONTAINS INFORMATION THAT IS PROPRIETARY TO MOLEX ELECTRONIC TECHNOLOGIES, LLC AND SHOULD NOT BE USED WITHOUT WRITTEN PERMISSION

CURRENT REV DESC: SEE REVISION TABLE

STATUS: Production
DRWN: Yuki Song 2025-07-16
CHK'D: Elvis Song 2025-07-17
APPR: Isong05 2025-07-17

THIRD ANGLE PROJECTION | DRAWING: A1-SIZE | SERIES: 33472

molex

MX150 RCPT
DUAL ROW SEALED ASSEMBLY

PRODUCT CUSTOMER DRAWING

DOCUMENT NUMBER	DOC TYPE	DOC PART	REVISION
SD-33472-0001	PSD	001	C11

MATERIAL NUMBER	CUSTOMER	SHEET NUMBER
	GENERAL MARKET	7 OF 11

SHEET DESCRIPTION
MOLEX BACKSHELL

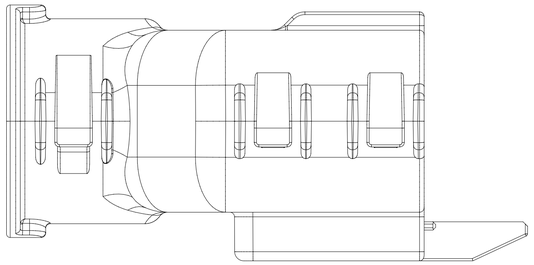

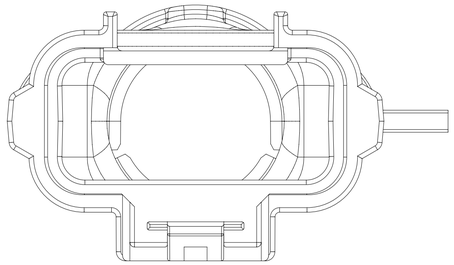

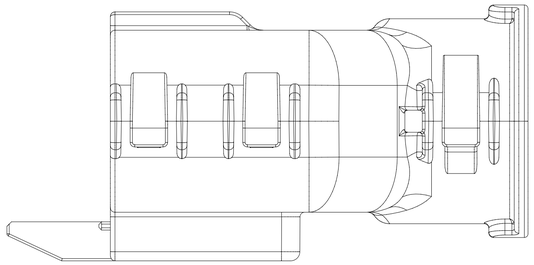

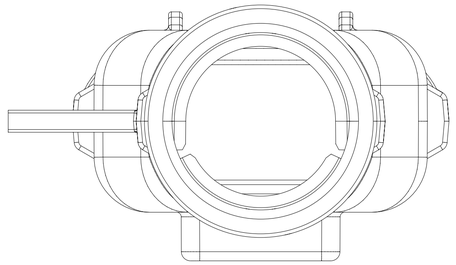

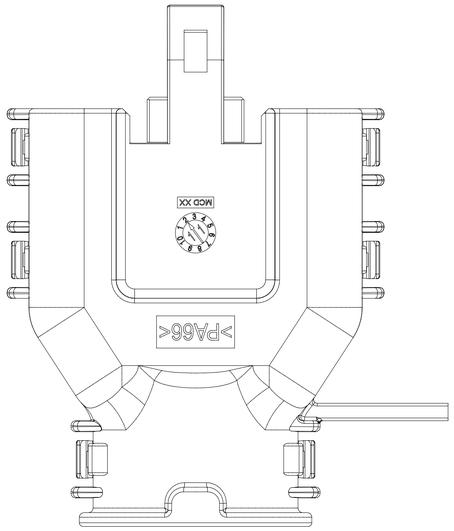

THIS DRAWING CONTAINS INFORMATION THAT IS PROPRIETARY TO MOLEX ELECTRONIC TECHNOLOGIES, LLC AND SHOULD NOT BE USED WITHOUT WRITTEN PERMISSION

FUNCTIONAL SYMBOLS	DIMENSION UNITS	SCALE
FA = 0	MM	3:1
FC = 0	GENERAL TOLERANCES (UNLESS SPECIFIED)	
FP = 0	ANGULAR TOL	± 1°
DIVISIONAL SYMBOLS	4 PLACES	±
	3 PLACES	±
	2 PLACES	± 0.100
	1 PLACE	± 0.20
	0 PLACES	±
	DRAFT WHERE APPLICABLE MUST REMAIN WITHIN DIMENSIONS	

CURRENT REV DESC: SEE REVISION TABLE

STATUS: Production
DRWN: Yuki Song 2025-07-16
CHK'D: Elvis Song 2025-07-17
APPR: Isong05 2025-07-17

THIRD ANGLE PROJECTION

DRAWING	SERIES
A1-SIZE	33472

molex

MX150 RCPT
DUAL ROW SEALED ASSEMBLY

PRODUCT CUSTOMER DRAWING

DOCUMENT NUMBER	DOC TYPE	DOC PART	REVISION
SD-33472-0001	PSD	001	C11

MATERIAL NUMBER	CUSTOMER	SHEET NUMBER
	GENERAL MARKET	8 OF 11

FORMAT: 11-Engineer-A
REVISION: B
DATE: 2022/04/01

SHEET DESCRIPTION
SCHLEMMER BACKSHELL CONFIGURATIONS

CHARTED DIMENSIONS	
DESCRIPTION	DIMENSIONS
	H
2X3 W/ CLIPSLOT	N/A
2X3 W/O CLIPSLOT	28.50
2X4 W/ CLIPSLOT	N/A
2X4 W/O CLIPSLOT	30.75
2X6 W/ CLIPSLOT	N/A
2X6 W/O CLIPSLOT	35.83

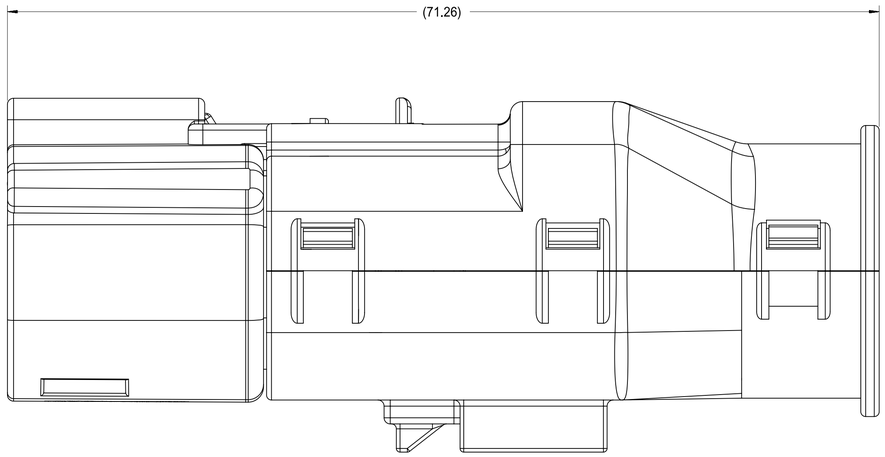

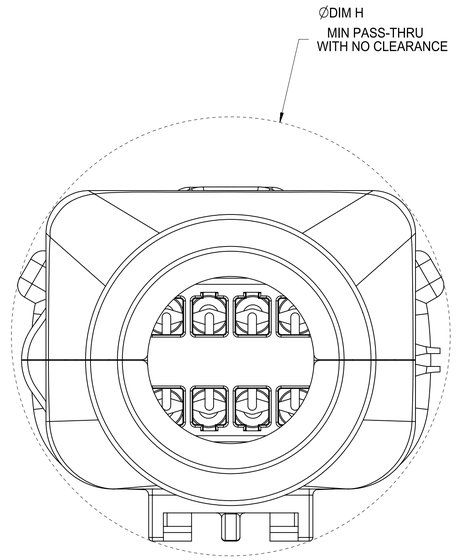

RECEPTACLE SEALED ASSEMBLY WITH RECEPTACLE BACKSHELL

THIS DRAWING CONTAINS INFORMATION THAT IS PROPRIETARY TO MOLEX ELECTRONIC TECHNOLOGIES, LLC AND SHOULD NOT BE USED WITHOUT WRITTEN PERMISSION

FUNCTIONAL SYMBOLS	DIMENSION UNITS	SCALE
FA = 0	MM	4:1
FC = 0	GENERAL TOLERANCES (UNLESS SPECIFIED)	
FP = 0	ANGULAR TOL	± 1°
DIVISIONAL SYMBOLS	4 PLACES	±
	3 PLACES	±
	2 PLACES	± 0.100
	1 PLACE	± 0.20
	0 PLACES	±
	DRAFT WHERE APPLICABLE MUST REMAIN WITHIN DIMENSIONS	

CURRENT REV DESC: SEE REVISION TABLE

STATUS: Production
DRWN: Yuki Song 2025-07-16
CHK'D: Elvis Song 2025-07-17
APPR: Isong05 2025-07-17

THIRD ANGLE PROJECTION | DRAWING: A1-SIZE | SERIES: 33472

molex

MX150 RCPT
DUAL ROW SEALED ASSEMBLY

PRODUCT CUSTOMER DRAWING

DOCUMENT NUMBER	DOC TYPE	DOC PART	REVISION
SD-33472-0001	PSD	001	C11

MATERIAL NUMBER | CUSTOMER: GENERAL MARKET | SHEET NUMBER: 9 OF 11

FORMAT: TC-large-pdf-A1
REVISION: B
DATE: 2022/06/01

SHEET DESCRIPTION
MOLEX BACKSHELL CONFIGURATIONS

RECEPTACLE SEALED ASSEMBLY WITH RECEPTACLE BACKSHELL

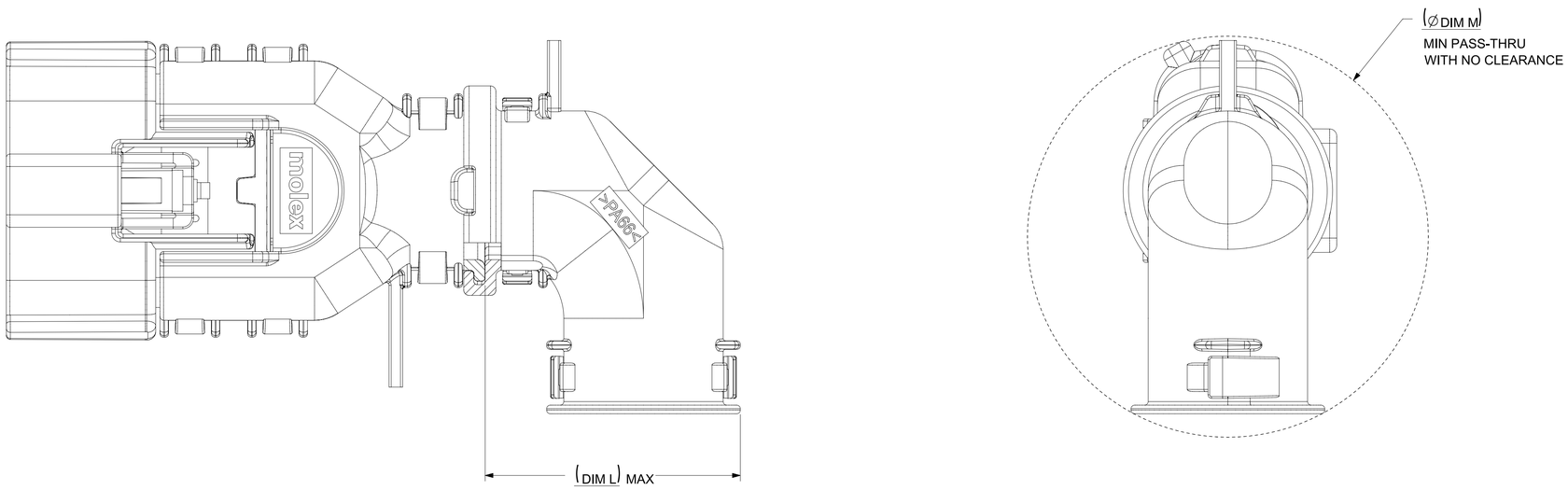

ADD THE VALUE OF 'L' TO THE TOTAL DIMENSION
WHENEVER ADAPTOR IS USED

	CHARTED DIMENSIONS				
	DESCRIPTION	DIMENSIONS			
		J	K	L	M
	2X2 W/O CLIPSLOT	TBD	TBD	TBD	TBD
B	2X2 W/ CLIP SLOT	TBD	TBD	TBD	TBD
	2X2 LENGTHENED	TBD	TBD	TBD	TBD
	2X4 W/ CLIPSLOT	58.39	32.85	32.10	44.26
	2X4 W/O CLIPSLOT	N/A	N/A	N/A	N/A
	2X8 W/ CLIPSLOT	67.19	42.65	36.10	56.49
B	2X8 W/O CLIPSLOT	N/A	N/A	N/A	N/A
	2X10 W/ CLIPSLOT	67.19	42.65	36.10	56.49
C	2X10 W/O CLIPSLOT	N/A	N/A	N/A	N/A

THIS DRAWING CONTAINS INFORMATION THAT IS PROPRIETARY TO MOLEX ELECTRONIC TECHNOLOGIES, LLC AND SHOULD NOT BE USED WITHOUT WRITTEN PERMISSION

FUNCTIONAL SYMBOLS	DIMENSION UNITS	SCALE
FA = 0	MM	2.5:1
FC = 0	GENERAL TOLERANCES (UNLESS SPECIFIED)	
FP = 0	ANGULAR TOL	± 1°
DIVISIONAL SYMBOLS	4 PLACES	±
	3 PLACES	±
	2 PLACES	± 0.100
	1 PLACE	± 0.20
	0 PLACES	±
	DRAFT WHERE APPLICABLE MUST REMAIN WITHIN DIMENSIONS	

CURRENT REV DESC: SEE REVISION TABLE

STATUS: Production
DRWN: Yuki Song 2025-07-16
CHK'D: Elvis Song 2025-07-17
APPR: Isong05 2025-07-17

THIRD ANGLE PROJECTION | DRAWING: A1-SIZE | SERIES: 33472

molex

MX150 RCPT
DUAL ROW SEALED ASSEMBLY

PRODUCT CUSTOMER DRAWING

DOCUMENT NUMBER	DOC TYPE	DOC PART	REVISION
SD-33472-0001	PSD	001	C11

MATERIAL NUMBER | CUSTOMER: GENERAL MARKET | SHEET NUMBER: 10 OF 11

FORMAT: TCdesignsA1
TEMPLATE: 0
DATE: 2022/08/01

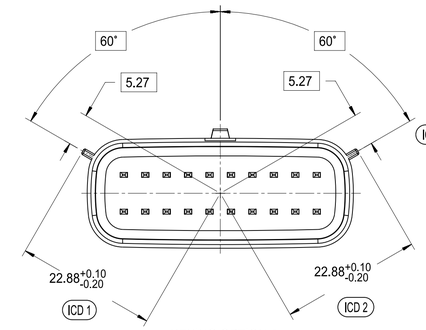

KEYING OPTION A
SCALE 4:1

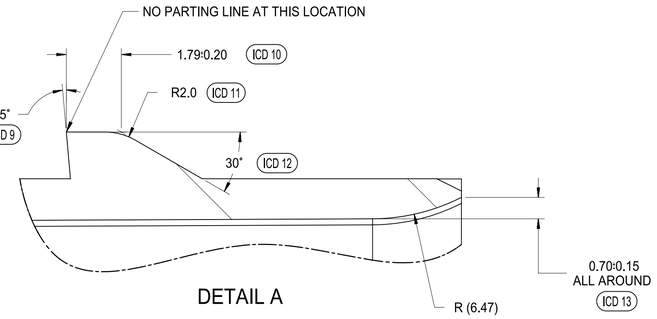

DETAIL A
SCALE 10:1

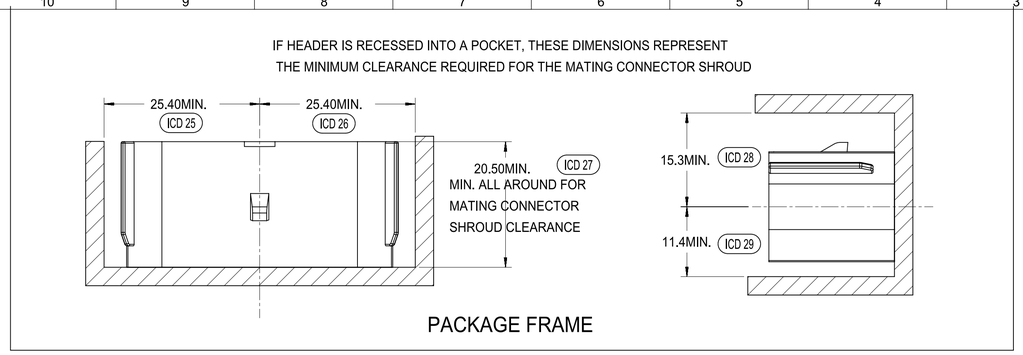

PACKAGE FRAME

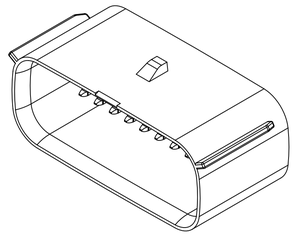

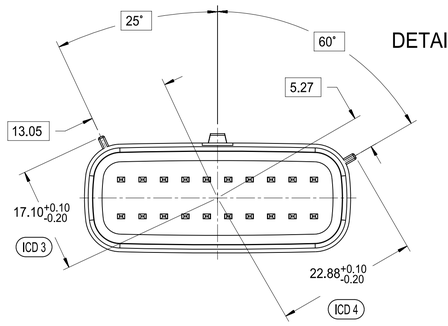

KEYING OPTION B
SCALE 4:1

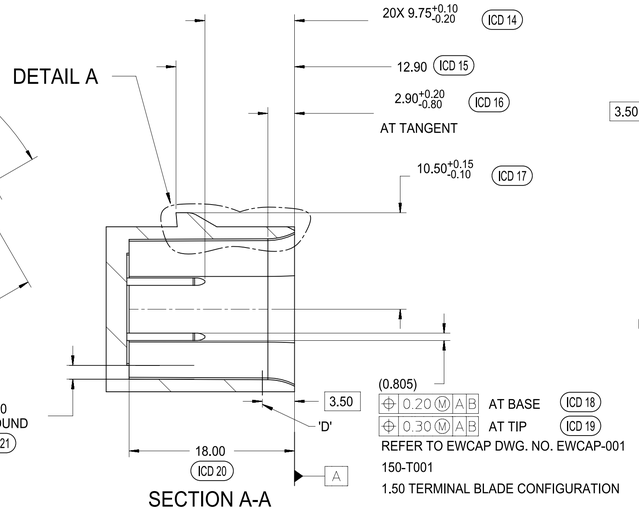

0.20 M A B AT BASE ICD 18
0.30 M A B AT TIP ICD 19
REFER TO EWCAP DWG. NO. EWCAP-001
150-T001
1.50 TERMINAL BLADE CONFIGURATION

SECTION A-A

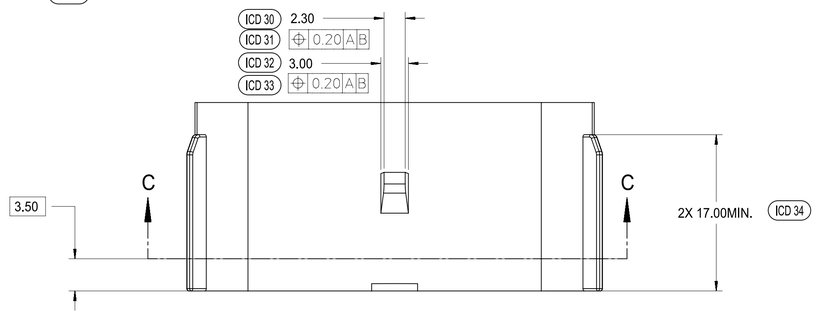

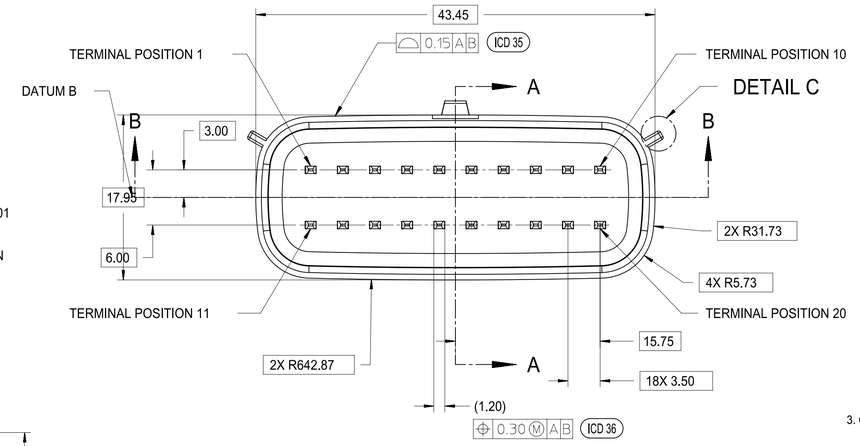

REFER TO EWCAP DWG. NO. EWCAP-001
150-T001
1.50 TERMINAL BLADE CONFIGURATION

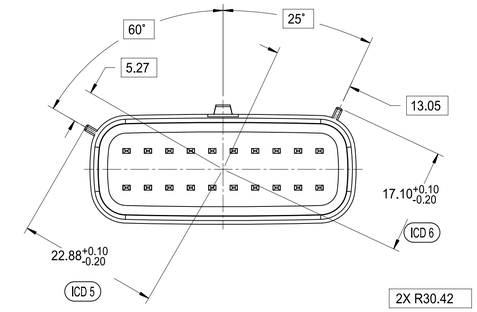

KEYING OPTION C
SCALE 4:1

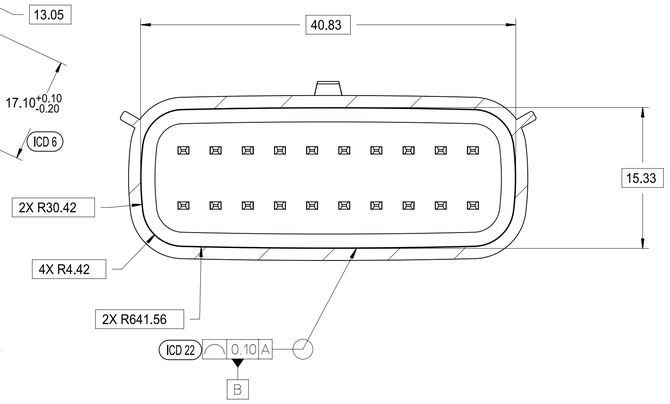

SECTION C-C

SURFACE MUST BE FREE
OF SURFACE DEFECTS AND
PARTING LINES FOR
SEALING ALL AROUND

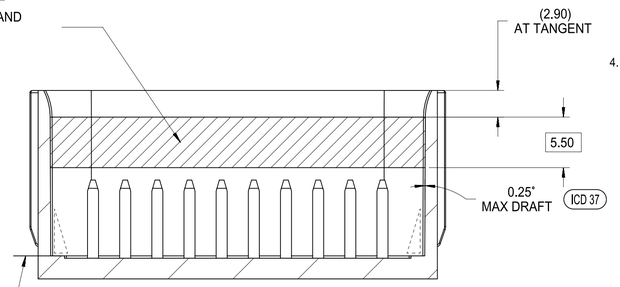

SECTION B-B

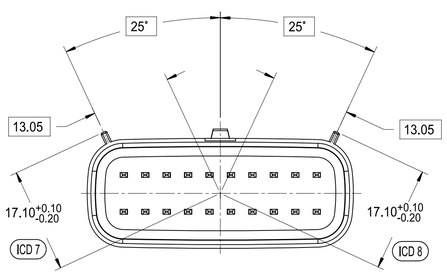

KEYING OPTION D
SCALE 4:1

CONSTRUCTION BELOW THIS SURFACE IS
NOT CONTROLLED BY EWCAP. NO PLASTIC
FEATURES MAY EXTEND ABOVE THIS SURFACE.

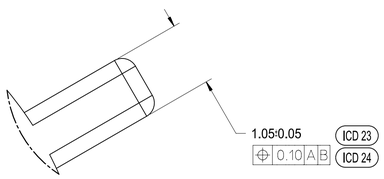

DETAIL C
SCALE 20:1
APPLIES 2X
SEE KEYING OPTION VIEWS
FOR POSITIONS

MATING INTERFACE NOTES: VALID UNLESS OTHERWISE SPECIFIED

1. GENERAL:
   a. DESIGNED TO MATE WITH MOLEX CONNECTOR 33472-2XXX & 160008-0XXX & 160074-0XXX
      A FULL SHROUD ON THE MATING CONNECTOR IS REQUIRED TO INSURE THAT THE CONNECTOR-HEADER POLARIZATION FEATURES (OPTIONS A THRU D) WILL FUNCTION. THE FULL SHROUD ALSO PREVENTS SCOOP DAMAGE TO THE HEADER PINS. REFER TO 'SAE/USCAR-12 CONNECTOR DESIGN GUIDE LINES' FOR ADDITIONAL INFORMATION
   b. PARTS MUST BE IN COMPLIANCE TO MOLEX CHEMICAL SUBSTANCES FOR PRODUCTS AND PACKAGING SPECIFICATION: ES-40000-5016
   c. FLAMMABILITY REQUIREMENT: PER ISO3795 OR GM3191
      1. BURN RATE 100mm/MIN MAXIMUM
      2. MATERIAL MUST BE SELF EXTINGUISHING

2. MATERIALS:
   a. MATERIAL: SPS/NYLON GF20, REGRIND 20% MAX BY WEIGHT
   b. STANDARD COLORS FOR POLARIZATION (SEE KEYING OPTIONS TABLE). DEVIATION REQUIRES APPROVAL OF AUTHORIZED PERSON
   c. FOR BLADE BASE MATERIAL, PLATING AND PROCESS LUBRICANT:
      1. TIN: - BASE MATERIAL:COPPER ALLOY, CONDUCTIVITY >=60% IACS AT 20°C;
         TENSILE STRENGTH >= 410 N/mm²P - BARRIER MATERIAL: NICKEL DEPOSIT FROM NICKEL SULFAMATE PLATING SOLUTION W/O ANY ADDITIVES
         THICKNESS: 1.25 - 2.25 MICROMETERS
         - TOP LAYER: 100% ELECTRO-DEPOSITED TIN, MATTE FINISH
         THICKNESS: 2.5 - 4.0 MICROMETERS
      2. SILVER: - BARRIER MATERIAL: ELECTRO-DEPOSITED DUCTILE SULPHAMATE NICKEL
         THICKNESS: 1.25 - 2.25 MICROMETERS
         - TOP LAYER: ELECTRO-DEPOSITED SEMI-BRIGHT PURE SILVER (0.5% MAX IMPURITIES) OVER NICKEL ANTI-TARNISH TREATMENT EVERBRIGHT WS
         THICKNESS: 1.9 - 3.3 MICROMETERS
      3. BLADES MUST CONFORM TO ES-40000-5007, EXCEPT FOR SPECULAR REFLECTIVITY - SECTION 6.0
      4. ANY PROCESS LUBRICANT REMAINING ON THE TERMINAL MUST NOT VARNISH OR DEGRADE IT'S ELECTRICAL PERFORMANCE UP TO A MAXIMUM CLASS AMBIENT TERMPERATURE PER SAE USCAR-2 FOR 1008 HOURS, PROCESS LUBRICANTS SHOULD BE APPROVED BY THE RESPONSIBLE ENGINEER.
      5. INFORMATION FOR BLADE DESIGN WAS DEVELOPED FROM EWCAP DWG: EWCAP-001

3. GEOMETRY:
   a. THIS IS A 100% CAD GENERATED PART. THE CAD MATHEMATICAL DATA IS THE MASTER FOR THIS PART. FOR DIMENSIONAL OR ANY INFORMATION NOT SHOWN ON THIS DRAWING, ANALYZE THE CAD MODEL.
   b. GEOMETRIC DIMENSIONS AND TOLERANCES PER ASME Y14.5M - 1994
   c. GENERAL TOLERANCES: SEE TITLE BLOCK
   d. EDGES AND UNDIMENSIONED DETAILS PER ISO13715

4. MANUFACTURING:
   a. DRAFT TO BE WITHIN TOLERANCE.
      PLUS DRAFT - INDICATES A DIMENSION REPRESENTS THE SMALLEST SIZE OF A FEATURE. DRAFT WILL ADD MATERIAL.
      MINUS DRAFT - INDICATES A DIMENSION REPRESENTS THE LARGEST SIZE OF A FEATURE. DRAFT WILL REMOVE MATERIAL.
   b. ALLOWABLE FLASH MAX 0.20 HIGH BY MAX 0.13 THICK.
   c. ALLOWABLE SPLIT/PARTING LINE MISMATCH 0.2 MAX.
   d. VISUAL DEFECTS SHALL MEET COSMETIC STANDARD PS-45499-002 (Class B)
   e. NO EXTERNAL MOLD RELEASE AGENT ALLOWED DURING MANUFACTURING
   f. NO PARTING LINES, NO DRAFT, MISMATCHES OR EJECTOR MARKS PERMISSIBLE WITHIN SEALING SURFACE. SEALING SURFACE TOOLING TO BE PROCESSED TO A SURFACE FINISH OF NTMA #70 (400 PAPER) MINIMUM

P/N	OPTION	MATING CONNECTOR COLOR
150-S-020-2-D02	D	STONE GRAY
150-S-020-2-C02	C	DK GRAY
150-S-020-2-B02	B	LT GRAY
150-S-020-2-A02	A	BLACK

THIS DRAWING CONTAINS INFORMATION THAT IS PROPRIETARY TO MOLEX ELECTRONIC TECHNOLOGIES, LLC AND SHOULD NOT BE USED WITHOUT WRITTEN PERMISSION

FUNCTIONAL SYMBOLS: FA = 0, FC = 0, FP = 0
DIVISIONAL SYMBOLS

DIMENSION UNITS	SCALE
MM	1:1

GENERAL TOLERANCES (UNLESS SPECIFIED)

ANGULAR TOL	± 1°
4 PLACES	±
3 PLACES	±
2 PLACES	± 0.100
1 PLACE	± 0.20
0 PLACES	±

DRAFT WHERE APPLICABLE MUST REMAIN WITHIN DIMENSIONS

CURRENT REV DESC: SEE REVISION TABLE

STATUS: Production
DRWN: Yuki Song 2025-07-16
CHK'D: Elvis Song 2025-07-17
APPR: Isong05 2025-07-17

THIRD ANGLE PROJECTION | DRAWING: A1-SIZE | SERIES: 33472

molex

MX150 RCPT
DUAL ROW SEALED ASSEMBLY

PRODUCT CUSTOMER DRAWING

DOCUMENT NUMBER	DOC TYPE	DOC PART	REVISION
SD-33472-0001	PSD	001	C11

MATERIAL NUMBER | CUSTOMER: GENERAL MARKET | SHEET NUMBER: 11 OF 11

FORMAT: TCdesignA1
SIZE: 841x594
DATE: 2020/06/01