TABLE OF CONTENTS	
SHEET NO.	SHEET DESCRIPTION
1	NOTES AND BOM
2	CONFIGURATIONS
3-4	KEY CONFIGURATIONS
5	BLADE SEALED ASSEMBLY
6	SYSTEM PACKAGING
7	BACKSHELL NOTES
8	BACKSHELL
9	BACKSHELL CONFIGURATIONS

MATING CONNECTOR DRAWINGS	
DESCRIPTION	MOLEX INLINE
1X2	SD-33471-0001
1X6	SD-33471-0001

NOTES: VALID UNLESS OTHERWISE SPECIFIED

1. GENERAL:
a. APPLICATION SPECIFICATION SEE: AS-33472-100
-CONTAINS: PRODUCT INTRODUCTION, PRODUCT SUMMARY, CONNECTOR ASSEMBLY, PACKAGING INFORMATION, CONNECTOR MATING, SERVICE INSTRUCTIONS, ELECTRICAL CONTINUITY CHECKING, CRIMPING, AND TROUBLESHOOTING.
-DESIGNED TO MATE WITH RECEPTACLE SEALED ASSEMBLY AS SPECIFIED IN THE MATING CONNECTOR DRAWINGS CHART.
*DENOTES DRAWINGS THAT CAN BE ACCESSED AT http://ewcap.uscarteams.org/
-ASSEMBLY SHIPPED WITH PLR IN PRE-LOCK POSITION (SEE PLR PRE-LOCK VIEW SHEET 5).

b. PRODUCT SPECIFICATION SEE:
-STANDARD CONFIGURATION: PS-33471-000
-UL V0 CONFIGURATION: PS-160105-0001
CONTAINS: PRODUCT INTRODUCTION, PRODUCT SUMMARY, RATINGS (CURRENT, TEMPERATURE, SEALING, AND FLAMMABILITY), TERMINALS, WIRE DIAMETER RANGE, PRODUCT VALIDATION, AND PRODUCT DEVIATIONS.
c. PACKAGING SPECIFICATION PER MOLEX DRAWING: PK-31300-635 (PK-33471-000 FOR 1X5)
d. PARTS MUST BE IN COMPLIANCE TO MOLEX CHEMICAL SUBSTANCES FOR PRODUCTS AND PACKAGING SPECIFICATION: QEHS-699000-300
e. DATA MUST BE SUBMITTED UNDER THE MOLEX PART NUMBER TO IMDS (COMPANY ID#13255)

2. DESIGN - MATERIALS:
a. FOR BILL OF MATERIALS SEE: (A2)
-STANDARD CONFIGURATION: TBD
-UL V0 CONFIGURATION: SD-160106-0002

3. DESIGN - GEOMETRY:
a. THE 3-D CAD DATA IS BASIC (WITHOUT TOLERANCE) AND MASTER FOR THIS PART WITH THE EXCEPTION OF UNDERLINED DIMENSIONS. DIMENSIONAL INFORMATION NOT SHOWN ON THIS DRAWING IS DEFINED BY THE DATA FILE AT ITS LATEST REVISION.
b. GEOMETRIC DIMENSIONS AND TOLERANCES PER ASME Y14.5M-2009
c. EDGES AND UNDIMENSIONED DETAILS PER ISO13715
d. CORNERS SHOWN AS SHARP TO BE R 0.2 MAX.
e. LETTERING SHALL BE 0.15 MAX RAISED IN 0.25 MAX RECESS PAD. THIS INCLUDES RECYCLING CODE, CAVITY ID, VENDOR IDENTIFICATION, AND CUSTOMER MATERIAL NUMBER.
f. VISUAL DEFECTS SHALL MEET COSMETIC STANDARD PS-45499-002 (Class B).
g. LASER MARKING:
1. PART NUMBER
2. DAY OF THE YEAR
3. SHIFT
4. YEAR
FOR ADDITIONAL INFORMATION SEE SECTION 5 UNDER PROCEDURES IN ES-34735-008.

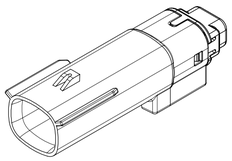

1X2

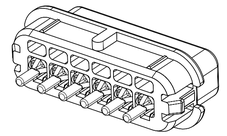

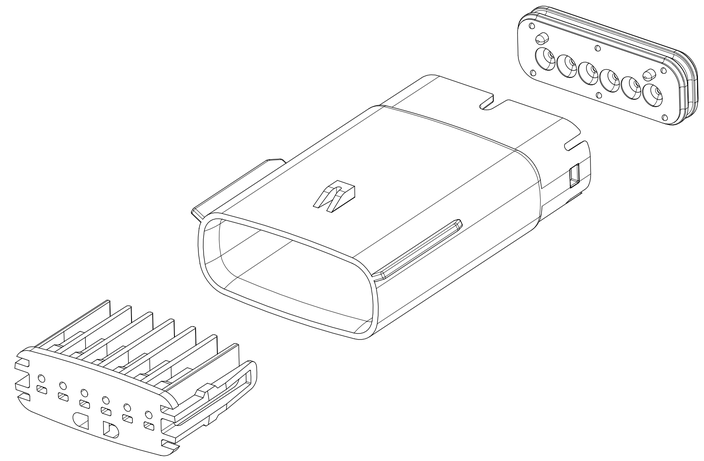

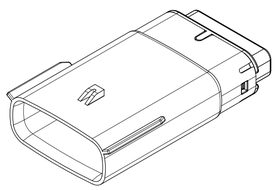

1X6

INSPECTION NUMBER LOG
LAST NUMBER: 9
ADDED:
REMOVED:

REV	REV DESCRIPTION
A2	CHANGE STANDARD CONFIGURATION TO TBD. SEE NOTES 2.a
A1	NX REMASTERING , CHANGE PS DRAWING NUMBER FROM PS-160105-0001 TO PS-160074-0001 IN NOTES 1.b
A	MINOR GEOMETRY CHANGE FOR UL V0
2	UPDATED VIEWSETS
1	INITIAL RELEASE

SYMBOLS
= 0
= 0
= 0
= 0
= 0
= 0
= 0
= 0

THIS DRAWING CONTAINS INFORMATION THAT IS PROPRIETARY TO MOLEX ELECTRONIC TECHNOLOGIES, LLC AND SHOULD NOT BE USED WITHOUT WRITTEN PERMISSION

DIMENSION UNITS	SCALE
MM ONLY	1.5:1

GENERAL TOLERANCES (UNLESS SPECIFIED)

ANGULAR TOL	±	0.5 °
4 PLACES	±	0
3 PLACES	±	0
2 PLACES	±	0
1 PLACE	±	0
0 PLACES	±	0

DRAFT WHERE APPLICABLE MUST REMAIN WITHIN DIMENSIONS

CURRENT REV DESC:

EC NO: CO-000012501
DRWN: Yann Chen 02-Sep-2022
CHK'D: Matt Young 08-May-2024
APPR: Elvis Song 10-May-2024

INITIAL REVISION:
DRWN: APROFFITT 2015/07/21
APPR: KDEKOSKI 2016/06/14

molex

MX150 BLADE
SINGLE ROW SEALED ASSY

PRODUCT SALES DRAWING

DOCUMENT NUMBER	DOC TYPE	DOC PART	REVISION
SD-33481-0001	PSD	001	A2

THIRD ANGLE PROJECTION	DRAWING	SERIES
	A1-SIZE	33481

MATERIAL NUMBER	CUSTOMER	SHEET NUMBER
SEE NOTE 2a.	GENERAL MARKET	1 OF 9

DOCUMENT STATUS	Production	RELEASE DATE	10-May-2024 15:02:02

SHEET DESCRIPTION

CONFIGURATIONS

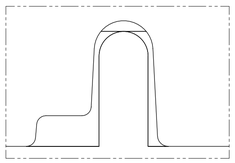

UL V0 UNIQUE FEATURE
Partial1
SCALE 10:1

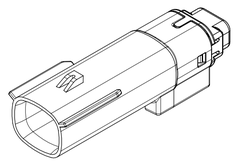

1x2 - STD

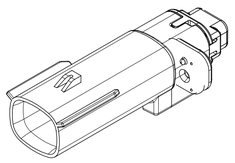

1X2 - UL V0*

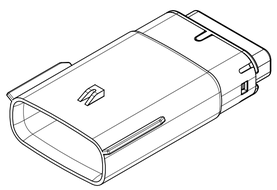

1x6 - STD

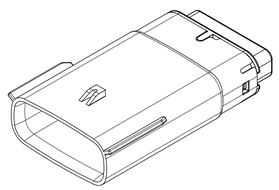

1x6 - UL V0*

* MINOR GEOMETRY DIFFERENCE THAN STANDARD CONFIGURATION.
SEE NOTES 1 & 2 FOR MORE INFORMATION

DOCUMENT STATUS	Production	RELEASE DATE	10-May-2024 15:02:02

THIS DRAWING CONTAINS INFORMATION THAT IS PROPRIETARY TO MOLEX ELECTRONIC TECHNOLOGIES, LLC AND SHOULD NOT BE USED WITHOUT WRITTEN PERMISSION

SYMBOLS	
A =	0
C =	0
D =	0
S =	0
=	0
C =	0
=	0
=	0
=	0

DIMENSION UNITS	SCALE
MM ONLY	1.5:1

GENERAL TOLERANCES (UNLESS SPECIFIED)		
ANGULAR TOL	±	0.5 °
4 PLACES	±	0
3 PLACES	±	0
2 PLACES	±	0
1 PLACE	±	0
0 PLACES	±	0

DRAFT WHERE APPLICABLE MUST REMAIN WITHIN DIMENSIONS

CURRENT REV DESC:

EC NO: CO-000012501
DRWN: Yann Chen 02-Sep-2022
CHK'D: Matt Young 08-May-2024
APPR: Elvis Song 10-May-2024

INITIAL REVISION:
DRWN: APROFFITT 2015/07/21
APPR: KDEKOSKI 2016/06/14

THIRD ANGLE PROJECTION | DRAWING: A1-SIZE | SERIES: 33481

molex

MX150 BLADE
SINGLE ROW SEALED ASSY

PRODUCT SALES DRAWING

DOCUMENT NUMBER	DOC TYPE	DOC PART	REVISION
SD-33481-0001	PSD	001	A2

MATERIAL NUMBER	CUSTOMER	SHEET NUMBER
SEE NOTE 2a.	GENERAL MARKET	2 OF 9

SHEET DESCRIPTION

KEY CONFIGURATIONS

1X2

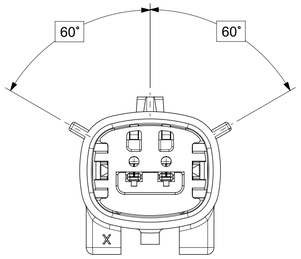

KEY A

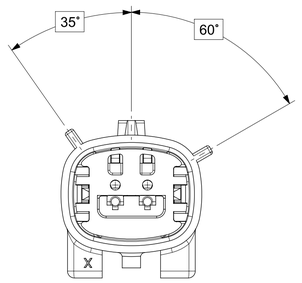

KEY B

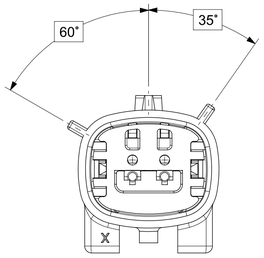

KEY C

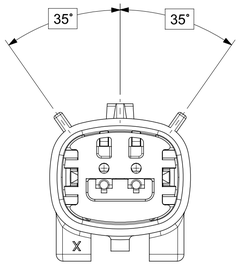

KEY D

THIS DRAWING CONTAINS INFORMATION THAT IS PROPRIETARY TO MOLEX ELECTRONIC TECHNOLOGIES, LLC AND SHOULD NOT BE USED WITHOUT WRITTEN PERMISSION

SYMBOLS	
FA	= 0
FC	= 0
FP	= 0
S	= 0
▼	= 0
C	= 0
☒	= 0
■	= 0
V	= 0

DIMENSION UNITS	SCALE
MM ONLY	3:1

GENERAL TOLERANCES (UNLESS SPECIFIED)

ANGULAR TOL	±	0.5 °
4 PLACES	±	0
3 PLACES	±	0
2 PLACES	±	0
1 PLACE	±	0
0 PLACES	±	0

DRAFT WHERE APPLICABLE MUST REMAIN WITHIN DIMENSIONS

CURRENT REV DESC:

EC NO: CO-000012501

DRWN: Yann Chen 02-Sep-2022

CHK'D: Matt Young 08-May-2024

APPR: Elvis Song 10-May-2024

INITIAL REVISION:

DRWN: APROFFITT 2015/07/21

APPR: KDEKOSKI 2016/06/14

THIRD ANGLE PROJECTION | DRAWING: A1-SIZE | SERIES: 33481

molex

MX150 BLADE
SINGLE ROW SEALED ASSY

PRODUCT SALES DRAWING

DOCUMENT NUMBER	DOC TYPE	DOC PART	REVISION
SD-33481-0001	PSD	001	A2

MATERIAL NUMBER	CUSTOMER	SHEET NUMBER
SEE NOTE 2a.	GENERAL MARKET	3 OF 9

DOCUMENT STATUS	Production	RELEASE DATE	10-May-2024 15:02:02

SHEET DESCRIPTION

KEY CONFIGURATIONS CONT.

1X6

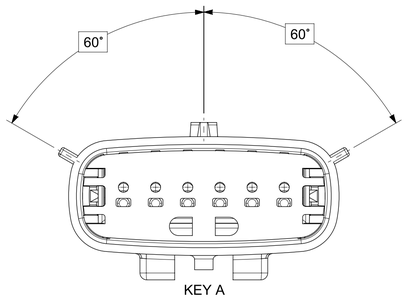

KEY A

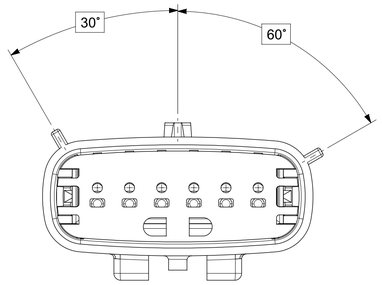

KEY B

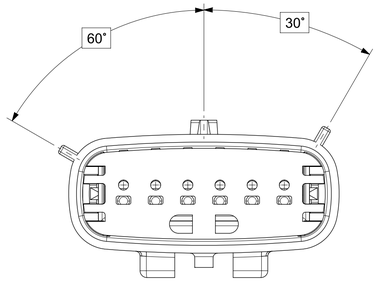

KEY C

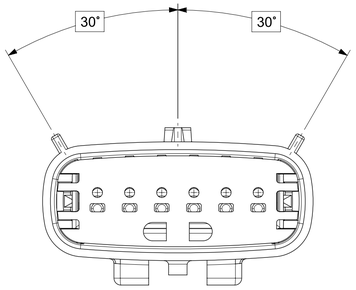

KEY D

SYMBOLS

FA	= 0
FC	= 0
FD	= 0
S	= 0
▼	= 0
C	= 0
☒	= 0
■	= 0
C	= 0

THIS DRAWING CONTAINS INFORMATION THAT IS PROPRIETARY TO MOLEX ELECTRONIC TECHNOLOGIES, LLC AND SHOULD NOT BE USED WITHOUT WRITTEN PERMISSION

DIMENSION UNITS	SCALE
MM ONLY	3:1

GENERAL TOLERANCES (UNLESS SPECIFIED)

ANGULAR TOL	±	0.5 °
4 PLACES	±	0
3 PLACES	±	0
2 PLACES	±	0
1 PLACE	±	0
0 PLACES	±	0

DRAFT WHERE APPLICABLE MUST REMAIN WITHIN DIMENSIONS

CURRENT REV DESC:

EC NO: CO-000012501
DRWN: Yann Chen 02-Sep-2022
CHK'D: Matt Young 08-May-2024
APPR: Elvis Song 10-May-2024

INITIAL REVISION:
DRWN: APROFFITT 2015/07/21
APPR: KDEKOSKI 2016/06/14

molex

MX150 BLADE
SINGLE ROW SEALED ASSY

PRODUCT SALES DRAWING

DOCUMENT NUMBER	DOC TYPE	DOC PART	REVISION
SD-33481-0001	PSD	001	A2

THIRD ANGLE PROJECTION	DRAWING	SERIES	MATERIAL NUMBER	CUSTOMER	SHEET NUMBER
	A1-SIZE	33481	SEE NOTE 2a.	GENERAL MARKET	4 OF 9

DOCUMENT STATUS	Production	RELEASE DATE	10-May-2024 15:02:02

SHEET DESCRIPTION

BLADE SEALED ASSEMBLY

CHARTED DIMENSIONS

DESCRIPTION	DIMENSIONS				
	A	B	C	D	E
1X2	N/A	1.75	21.00	55.50	17.30
1X6	29.69	1.75	31.71	54.45	17.23

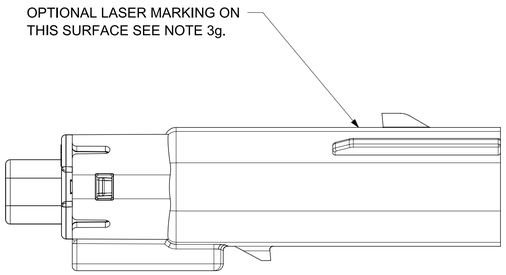

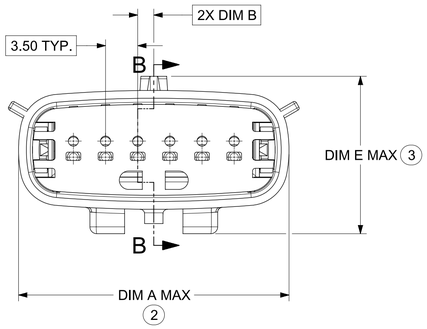

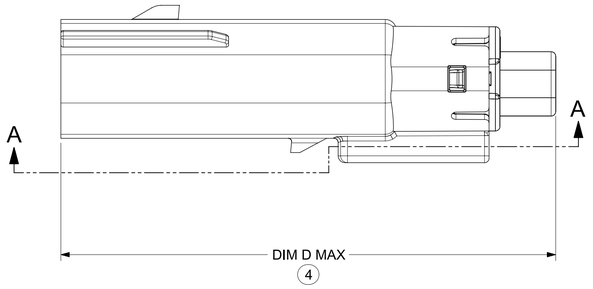

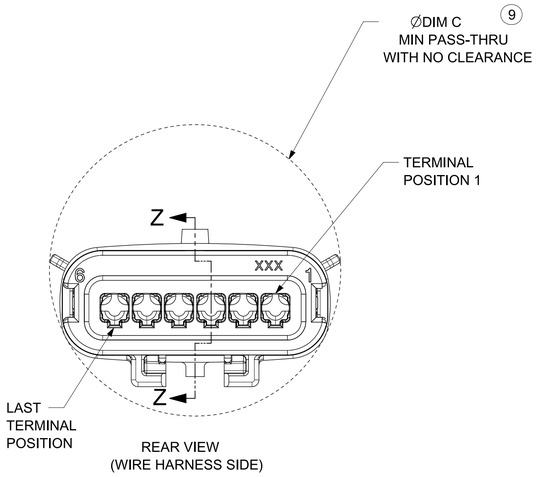

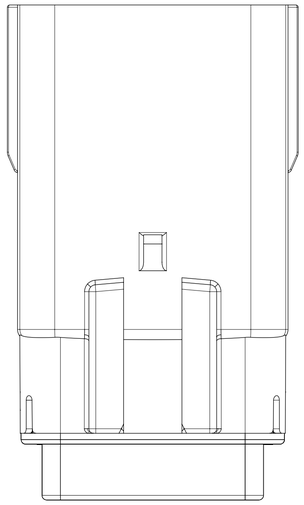

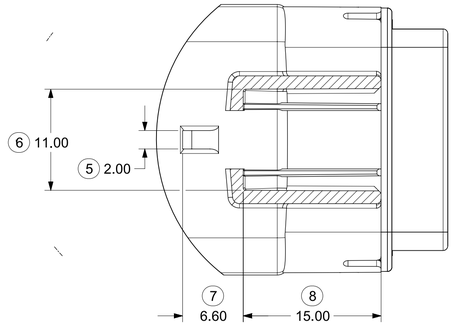

PARTIAL A-A
SCALE 3:1

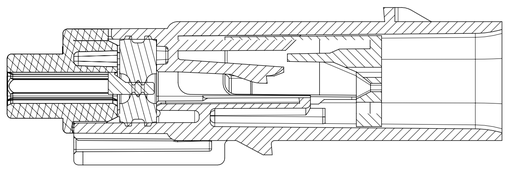

PRIMARY LOCK REINFORCEMENT (PLR) SHOWN
IN PRE-STAGED POSITION
SECTION B-B

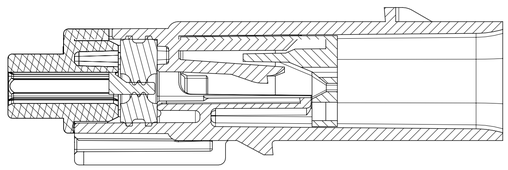

PRIMARY LOCK REINFORCEMENT (PLR) SHOWN
IN FINAL-LOCK POSITION

SECTION Z-Z

SYMBOLS	
A =	0
B =	0
C =	0
D =	0
E =	0
F =	0
G =	0
H =	0
J =	0

THIS DRAWING CONTAINS INFORMATION THAT IS PROPRIETARY TO MOLEX ELECTRONIC TECHNOLOGIES, LLC AND SHOULD NOT BE USED WITHOUT WRITTEN PERMISSION

DIMENSION UNITS	SCALE
MM ONLY	3:1

GENERAL TOLERANCES (UNLESS SPECIFIED)

ANGULAR TOL	±	0.5 °
4 PLACES	±	0
3 PLACES	±	0
2 PLACES	±	0
1 PLACE	±	0
0 PLACES	±	0

DRAFT WHERE APPLICABLE MUST REMAIN WITHIN DIMENSIONS

CURRENT REV DESC:

EC NO: CO-000012501
DRWN: Yann Chen 02-Sep-2022
CHK'D: Matt Young 08-May-2024
APPR: Elvis Song 10-May-2024

INITIAL REVISION:
DRWN: APROFFITT 2015/07/21
APPR: KDEKOSKI 2016/06/14

THIRD ANGLE PROJECTION | DRAWING: A1-SIZE | SERIES: 33481

molex

MX150 BLADE
SINGLE ROW SEALED ASSY

PRODUCT SALES DRAWING

DOCUMENT NUMBER	DOC TYPE	DOC PART	REVISION
SD-33481-0001	PSD	001	A2

MATERIAL NUMBER	CUSTOMER	SHEET NUMBER
SEE NOTE 2a.	GENERAL MARKET	5 OF 9

DOCUMENT STATUS	Production	RELEASE DATE	10-May-2024 15:02:02

FORMAT: Molex Standard
SIZE: A1
DATE: 2018/01/16

SHEET DESCRIPTION

SYSTEM PACKAGING

CHARTED DIMENSIONS				
CKT	BLADE CONFIGURATION	RECEPTACLE CONFIGURATION	DIMENSIONS K	DIMENSIONS L
1X2	STANDARD	STANDARD	73.85	23.37
1X6	STANDARD	STANDARD	72.71	35.38

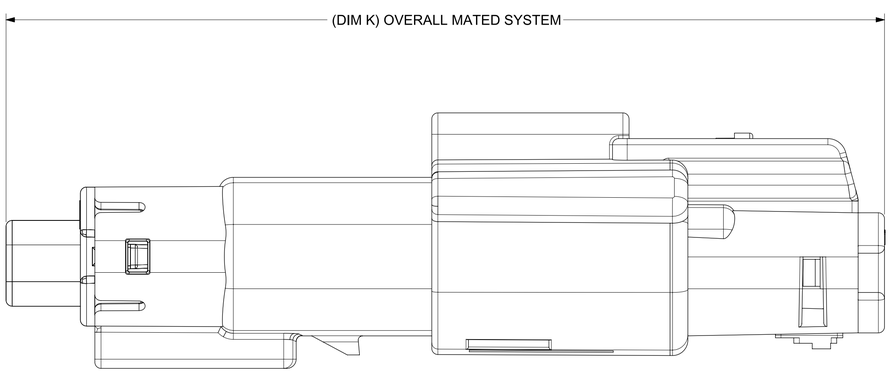

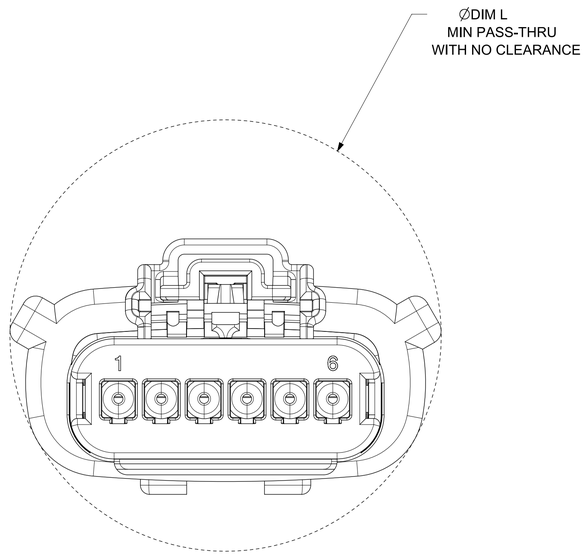

SYMBOLS
A = 0
C = 0
F = 0
S = 0
= 0
C = 0
= 0
= 0
= 0

THIS DRAWING CONTAINS INFORMATION THAT IS PROPRIETARY TO MOLEX ELECTRONIC TECHNOLOGIES, LLC AND SHOULD NOT BE USED WITHOUT WRITTEN PERMISSION

DIMENSION UNITS	SCALE
MM ONLY	4:1

GENERAL TOLERANCES (UNLESS SPECIFIED)

ANGULAR TOL	±	0.5 °
4 PLACES	±	0
3 PLACES	±	0
2 PLACES	±	0
1 PLACE	±	0
0 PLACES	±	0

DRAFT WHERE APPLICABLE MUST REMAIN WITHIN DIMENSIONS

CURRENT REV DESC:

EC NO: CO-000012501
DRWN: Yann Chen 02-Sep-2022
CHK'D: Matt Young 08-May-2024
APPR: Elvis Song 10-May-2024

INITIAL REVISION:
DRWN: APROFFITT 2015/07/21
APPR: KDEKOSKI 2016/06/14

THIRD ANGLE PROJECTION | DRAWING: A1-SIZE | SERIES: 33481

molex

MX150 BLADE
SINGLE ROW SEALED ASSY

PRODUCT SALES DRAWING

DOCUMENT NUMBER	DOC TYPE	DOC PART	REVISION
SD-33481-0001	PSD	001	A2

MATERIAL NUMBER	CUSTOMER	SHEET NUMBER
SEE NOTE 2a.	GENERAL MARKET	6 OF 9

DOCUMENT STATUS	Production	RELEASE DATE	10-May-2024 15:02:02

SHEET DESCRIPTION

BACKSHELL NOTES

BACKSHELL NOTES: VALID UNLESS OTHERWISE SPECIFIED

1. GENERAL:
a. APPLICATION SPECIFICATION SEE: AS-34951-001
- -DESIGNED TO MATE WITH BLADE SEALED ASSEMBLY SPECIFIED IN MOLEX DRAWING SD-33481-0001.
- -SYSTEM TO BE USED WITH WIRE WITHIN DIAMETER RANGE OF 1.2mm TO 2.69mm.
- -COMPONENTS ARE OPTIONAL AND MUST BE PURCHASED SEPERATELY.
- -BACKSHELL DESIGN IS OWNED BY SCHLEMMER.
- -FOR ADDITIONAL INFORMATION SEE THE BACKSHELL COMPONENT DRAWING SD-34948-0001.

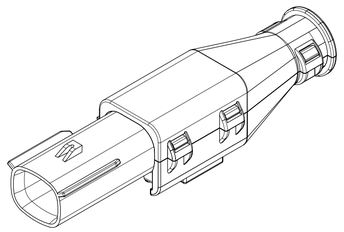

1X2

BACKSHELL CUSTOMER
MODEL NUMBER LEGEND

34948-XXXX

CUSTOMER MODEL COMPONENTS
- 0 - BACKSHELL ONLY
- 1 - BACKSHELL & MX150 HOUSING KEY A ASSEMBLY
- 2 - BACKSHELL & MX150 HOUSING KEY B ASSEMBLY
- 3 - BACKSHELL & MX150 HOUSING KEY C ASSEMBLY
- 4 - BACKSHELL & MX150 HOUSING KEY D ASSEMBLY

BACKSHELL FEATURES
- 1 - WITH RIBS
- 2 - WITHOUT RIBS

MX150 CIRCUIT SIZE 02, 03, 04, 05, 06

BACKSHELL (BKS)

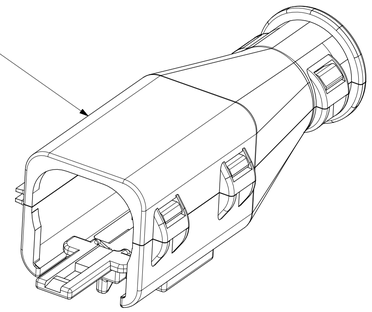

BLADE SEALED ASSEMBLY

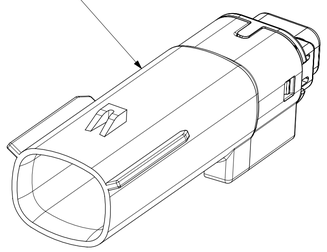

SYMBOLS	THIS DRAWING CONTAINS INFORMATION THAT IS PROPRIETARY TO MOLEX ELECTRONIC TECHNOLOGIES, LLC AND SHOULD NOT BE USED WITHOUT WRITTEN PERMISSION		
A = 0	DIMENSION UNITS: MM ONLY	SCALE: 4:1	CURRENT REV DESC:
C = 0	GENERAL TOLERANCES (UNLESS SPECIFIED)		
B = 0	ANGULAR TOL ± 0.5 °		
S = 0	4 PLACES ± 0		EC NO: CO-000012501
= 0	3 PLACES ± 0		DRWN: Yann Chen 02-Sep-2022
C = 0	2 PLACES ± 0		CHK'D: Matt Young 08-May-2024
= 0	1 PLACE ± 0		APPR: Elvis Song 10-May-2024
= 0	0 PLACES ± 0		INITIAL REVISION:
= 0	DRAFT WHERE APPLICABLE MUST REMAIN WITHIN DIMENSIONS		DRWN: APROFFITT 2015/07/21
	THIRD ANGLE PROJECTION	DRAWING: A1-SIZE	APPR: KDEKOSKI 2016/06/14
		SERIES: 33481	

molex

MX150 BLADE
SINGLE ROW SEALED ASSY

PRODUCT SALES DRAWING

DOCUMENT NUMBER	DOC TYPE	DOC PART	REVISION
SD-33481-0001	PSD	001	A2

MATERIAL NUMBER	CUSTOMER	SHEET NUMBER
SEE NOTE 2a.	GENERAL MARKET	7 OF 9

DOCUMENT STATUS	Production	RELEASE DATE	10-May-2024 15:02:02

FORMAT: molex-tbuymm1
DATE: 2024/05/10
DATE: 2024/05/10

SHEET DESCRIPTION

BACKSHELL

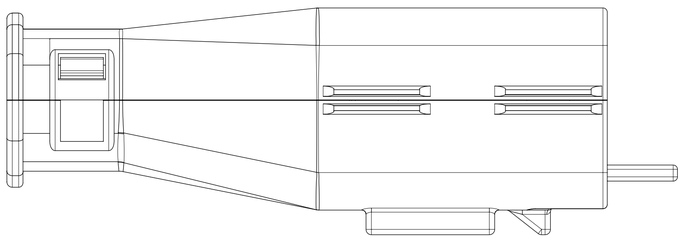

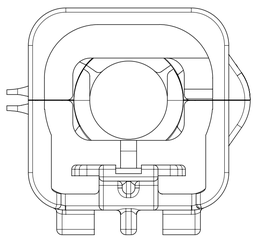

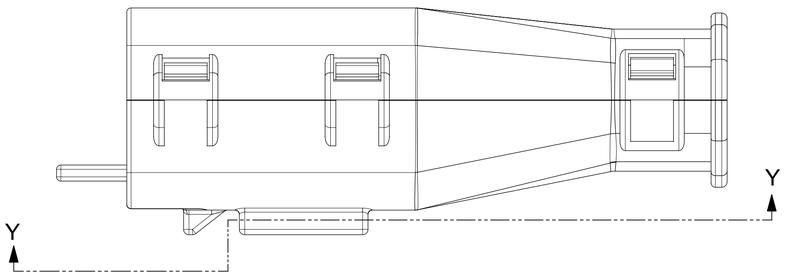

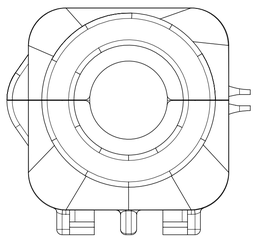

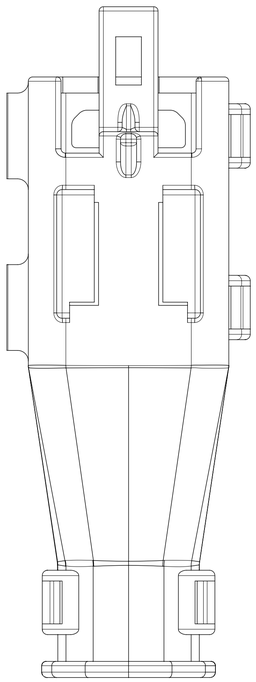

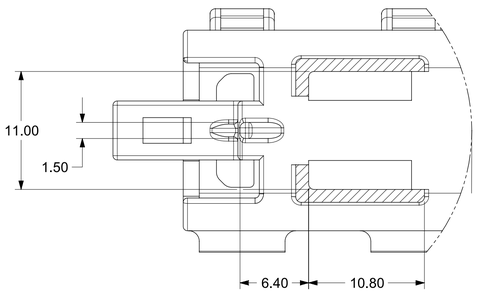

PARTIAL Y-Y
SCALE 3.5:1

SYMBOLS	
A =	0
C =	0
F =	0
S =	0
=	0
C =	0
=	0
=	0
=	0

THIS DRAWING CONTAINS INFORMATION THAT IS PROPRIETARY TO MOLEX ELECTRONIC TECHNOLOGIES, LLC AND SHOULD NOT BE USED WITHOUT WRITTEN PERMISSION

DIMENSION UNITS	SCALE
MM ONLY	3.5:1

GENERAL TOLERANCES (UNLESS SPECIFIED)

ANGULAR TOL	±	0.5 °
4 PLACES	±	0
3 PLACES	±	0
2 PLACES	±	0
1 PLACE	±	0
0 PLACES	±	0

DRAFT WHERE APPLICABLE MUST REMAIN WITHIN DIMENSIONS

CURRENT REV DESC:

EC NO: CO-000012501
DRWN: Yann Chen 02-Sep-2022
CHK'D: Matt Young 08-May-2024
APPR: Elvis Song 10-May-2024

INITIAL REVISION:
DRWN: APROFFITT 2015/07/21
APPR: KDEKOSKI 2016/06/14

THIRD ANGLE PROJECTION | DRAWING: A1-SIZE | SERIES: 33481

molex

MX150 BLADE
SINGLE ROW SEALED ASSY

PRODUCT SALES DRAWING

DOCUMENT NUMBER	DOC TYPE	DOC PART	REVISION
SD-33481-0001	PSD	001	A2

MATERIAL NUMBER	CUSTOMER	SHEET NUMBER
SEE NOTE 2a.	GENERAL MARKET	8 OF 9

DOCUMENT STATUS	Production	RELEASE DATE	10-May-2024 15:02:02

SHEET DESCRIPTION

BACKSHELL CONFIGURATIONS

CHARTED DIMENSIONS

CKT	BLADE CONFIGURATION	RECEPTACLE CONFIGURATION	DIMENSIONS				
			M	N	P	R	S
1X2	STANDARD	STANDARD	107.84	29.50	27.00	26.25	25.00

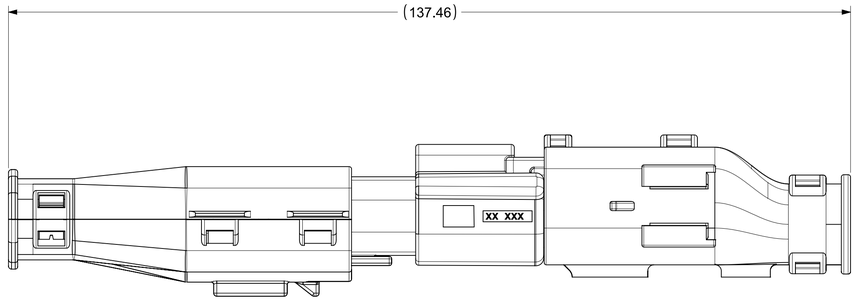

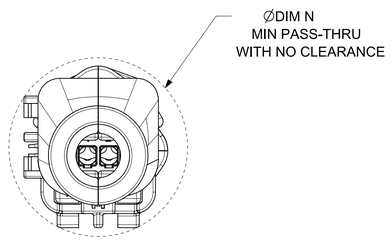

OVERALL MATED SYSTEM WITH BLADE AND RECEPTACLE BACKSHELL

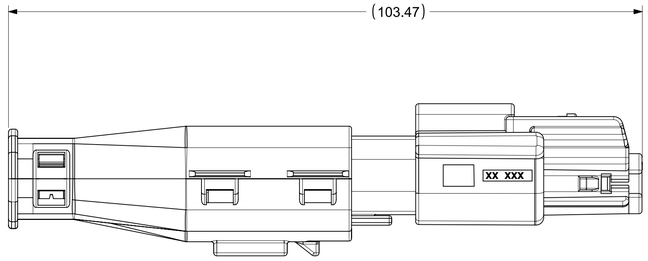

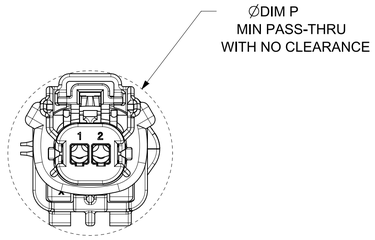

OVERALL MATED SYSTEM WITH BLADE BACKSHELL

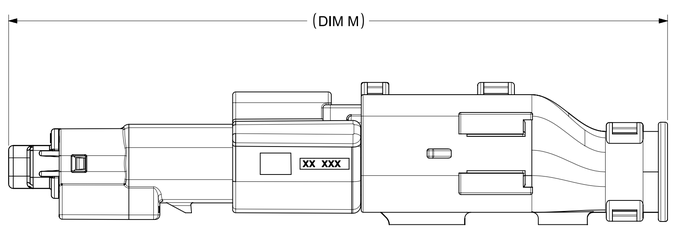

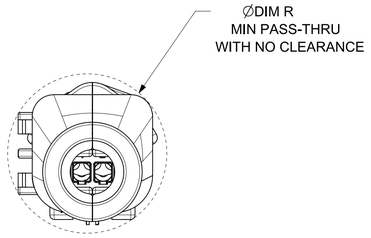

OVERALL MATED SYSTEM WITH RECEPTACLE BACKSHELL

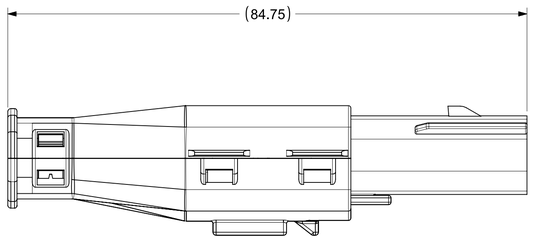

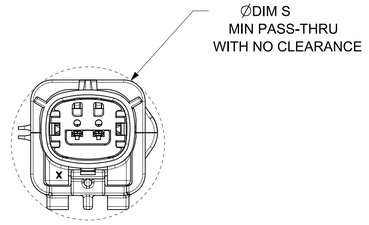

BLADE SEALED ASSEMBLY WITH BLADE BACKSHELL

SYMBOLS	
A = 0	
C = 0	
D = 0	
S = 0	
= 0	
C = 0	
= 0	
= 0	
= 0	

THIS DRAWING CONTAINS INFORMATION THAT IS PROPRIETARY TO MOLEX ELECTRONIC TECHNOLOGIES, LLC AND SHOULD NOT BE USED WITHOUT WRITTEN PERMISSION

DIMENSION UNITS	SCALE
MM ONLY	2:1

GENERAL TOLERANCES (UNLESS SPECIFIED)

ANGULAR TOL	±	0.5 °
4 PLACES	±	0
3 PLACES	±	0
2 PLACES	±	0
1 PLACE	±	0
0 PLACES	±	0

DRAFT WHERE APPLICABLE MUST REMAIN WITHIN DIMENSIONS

CURRENT REV DESC:

EC NO: CO-000012501
DRWN: Yann Chen 02-Sep-2022
CHK'D: Matt Young 08-May-2024
APPR: Elvis Song 10-May-2024

INITIAL REVISION:
DRWN: APROFFITT 2015/07/21
APPR: KDEKOSKI 2016/06/14

THIRD ANGLE PROJECTION | DRAWING: A1-SIZE | SERIES: 33481

molex

MX150 BLADE
SINGLE ROW SEALED ASSY

PRODUCT SALES DRAWING

DOCUMENT NUMBER	DOC TYPE	DOC PART	REVISION
SD-33481-0001	PSD	001	A2

MATERIAL NUMBER	CUSTOMER	SHEET NUMBER
SEE NOTE 2a.	GENERAL MARKET	9 OF 9

DOCUMENT STATUS	Production	RELEASE DATE	10-May-2024 15:02:02

FORMAT: molex-libportrait1
TEMPLATE: 1
DATE: 20180116

TABLE OF CONTENTS

SHEET NO.	SHEET DESCRIPTION
1	NOTES
2	KEY CONFIGURATIONS
3	BLADE SEALED ASSEMBLY
4	SYSTEM PACKAGING
5	BOM

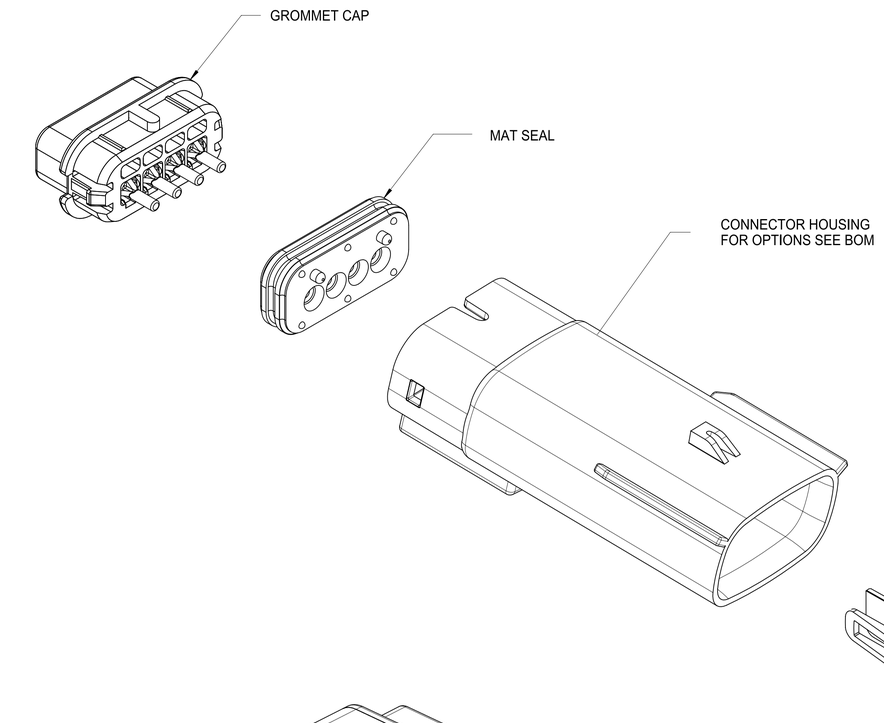

NOTES: VALID UNLESS OTHERWISE SPECIFIED

1. GENERAL:
a. APPLICATION SPECIFICATION SEE: AS-33472-100
CONTAINS: PRODUCT INTRODUCTION, PRODUCT SUMMARY, CONNECTOR ASSEMBLY, PACKAGING INFORMATION, CONNECTOR MATING, SERVICE INSTRUCTIONS, ELECTRICAL CONTINUITY CHECKING, CRIMPING, AND TROUBLESHOOTING.
-DESIGNED TO MATE WITH RECEPTACLE SEALED ASSEMBLY SPECIFIED IN MOLEX DRAWING SD-33471-041.
-FOR 1.5mm BLADE TERMINALS TO BE USED WITH THIS ASSEMBLY SEE MOLEX DRAWING SD-33000-001.
- SYSTEM TO BE USED WITH WIRE WITHIN DIAMETER RANGE OF 1.2mm TO 2.69mm.
-ASSEMBLY SHIPPED WITH PLR IN PRE-LOCK POSITION
-IN THE EVENT THAT THE PLR IS FOUND IN THE SEATED (FINAL LOCK) POSITION, REFER TO MOLEX SPECIFICATION PS-34646-001, AVAILABLE AT www.molex.com <http://www.molex.com>
-ASSEMBLY CONFORMS TO SAE/USCAR-2 REV.4 WITH THE FOLLOWING EXCEPTIONS: TERMINAL INSERTION FORCE FOR WIRE DIAMETER ABOVE 2.5mm NOT EXCEEDING 2.69mm SHALL NOT EXCEED 45 NEWTONS.
b. PRODUCT SPECIFICATION SEE: PS-33471-000
CONTAINS: PRODUCT INTRODUCTION, PRODUCT SUMMARY, RATINGS (CURRENT, TEMPERATURE, SEALING, AND FLAMMABILITY), AND PRODUCT VALIDATION.
c. PACKAGING SPECIFICATION PER MOLEX DRAWING: PK-31300-635
d. PARTS MUST BE IN COMPLIANCE TO MOLEX CHEMICAL SUBSTANCES FOR PRODUCTS AND PACKAGING SPECIFICATION: ES-40000-5016
e. DATA MUST BE SUBMITTED UNDER THE MOLEX PART NUMBER TO IMDS (COMPANY ID#13255)
f. FOR INFORMATION ON 1X4 BLADE SEALED ASSEMBLY WITH SHORTING BAR SEE SD-31280-200.

2. DESIGN - MATERIALS:
a. CONNECTOR HOUSING, GROMMET CAP, PLR: SPS/NYLON BLEND 20% GLASS FILLED
b. MAT SEAL: INHERENTLY LUBRICATED SILICONE

3. DESIGN - GEOMETRY:
a. THIS IS A 100% CAD GENERATED PART. THE CAD MATHEMATICAL DATA IS THE MASTER FOR THIS PART. FOR DIMENSIONAL OR ANY INFORMATION NOT SHOWN ON THIS DRAWING, ANALYZE THE CAD MODEL.
b. GEOMETRIC DIMENSIONS AND TOLERANCES PER ASME Y14.5M - 1994
c. EDGES AND UNDIMENSIONED DETAILS PER ISO13715
d. CORNERS SHOWN AS SHARP TO BE R 0.2 MAX.
e. LETTERING SHALL BE 0.15 MAX RAISED IN 0.25 MAX RECESS PAD. THIS INCLUDES RECYCLING CODE, CAVITY ID, VENDOR IDENTIFICATION, AND CUSTOMER MATERIAL NUMBER.
f. VISUAL DEFECTS SHALL MEET COSMETIC STANDARD PS-45499-002 (Class B)
g. LASER MARKING: TBD

REV #	DESCRIPTION
W9	ADDED NEW PN: 33481-4432
W8	ADDED NEW PN: 33481-4433
W7	UPDATED DESIGN CHANGE - ADDED RELIEF SLOT
W6	ADDED NEW PN: 33481-4431
W5	UPDATED THE STATUS OF THE FOLLOWING PART NUMBERS ON SHEET 5 FROM SALEABLE/NOT-RECOMMENDED TO OBSOLETE: 33481-4403, 33481-4404, 33481-4408, 33481-4409, 334814410, 33481-4413, 33481-4414, 33481-4415, 33481-4418, 33481-4419, & 33481-4420
W4	UPDATED THE STATUS OF P/Ns ON SHEET 5 33481-04XX) TO OBSOLETE PER PCN 512135 ADDED SALEABLE STATUS OF P/NS (33481-44XX) ON SHEET 5 P/Ns 334814408 THRU 334814409 AND 334814412 THRU 334814412 WHICH HAVE BEEN MARKED NOT RECOMMENDED IN THE COMMENTS

THIS DRAWING CONTAINS INFORMATION THAT IS PROPRIETARY TO MOLEX ELECTRONIC TECHNOLOGIES, LLC AND SHOULD NOT BE USED WITHOUT WRITTEN PERMISSION

FUNCTIONAL SYMBOLS
FA = 0
FC = 0
FP = 0

DIVISIONAL SYMBOLS

DIMENSION UNITS	SCALE
MM	3:1

GENERAL TOLERANCES (UNLESS SPECIFIED)

ANGULAR TOL	± 3'
4 PLACES	±
3 PLACES	±
2 PLACES	± 0.100
1 PLACE	± 0.30
0 PLACES	±

DRAFT WHERE APPLICABLE MUST REMAIN WITHIN DIMENSIONS

CURRENT REV DESC: ADDED 334814432 PART NUMBER

STATUS: Production
DRWN: Shekar S B 2025-10-15
CHK'D: Tom Smith 2025-10-28
APPR: Andy Proffitt 2025-10-28

THIRD ANGLE PROJECTION | DRAWING: D-SIZE | SERIES: 33481

molex

MX150 1X4 BLADE
SEALED ASSEMBLY MAT SEAL

PRODUCT CUSTOMER DRAWING

DOCUMENT NUMBER	DOC TYPE	DOC PART	REVISION
SD-33481-041	PSD	001	W9

MATERIAL NUMBER	CUSTOMER	SHEET NUMBER
	GENERAL MARKET	1 OF 5

KEY CONFIGURATIONS

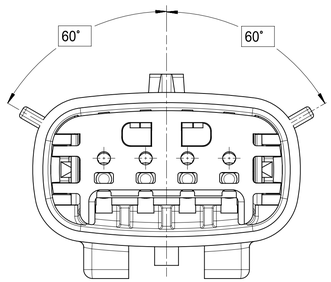

KEY A

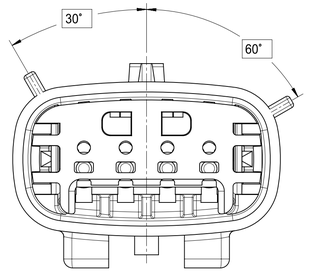

KEY B

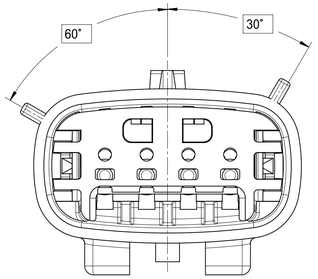

KEY C

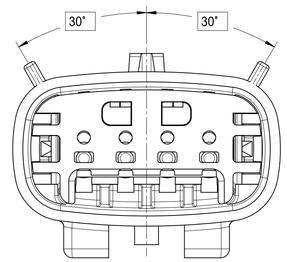

KEY D

THIS DRAWING CONTAINS INFORMATION THAT IS PROPRIETARY TO MOLEX ELECTRONIC TECHNOLOGIES, LLC AND SHOULD NOT BE USED WITHOUT WRITTEN PERMISSION

FUNCTIONAL SYMBOLS	DIMENSION UNITS	SCALE
FA = 0	MM	4:1
FC = 0	GENERAL TOLERANCES (UNLESS SPECIFIED)	
FP = 0	ANGULAR TOL	± 3°
DIVISIONAL SYMBOLS	4 PLACES	±
	3 PLACES	±
	2 PLACES	± 0.100
	1 PLACE	± 0.30
	0 PLACES	±
	DRAFT WHERE APPLICABLE MUST REMAIN WITHIN DIMENSIONS	

CURRENT REV DESC: ADDED 334814432 PART NUMBER

STATUS: Production
DRWN: Shekar S B 2025-10-15
CHK'D: Tom Smith 2025-10-28
APPR: Andy Proffitt 2025-10-28

THIRD ANGLE PROJECTION

DRAWING	SERIES
D-SIZE	33481

molex

MX150 1X4 BLADE
SEALED ASSEMBLY MAT SEAL

PRODUCT CUSTOMER DRAWING

DOCUMENT NUMBER	DOC TYPE	DOC PART	REVISION
SD-33481-041	PSD	001	W9

MATERIAL NUMBER	CUSTOMER	SHEET NUMBER
	GENERAL MARKET	2 OF 5

BLADE SEALED ASSEMBLY

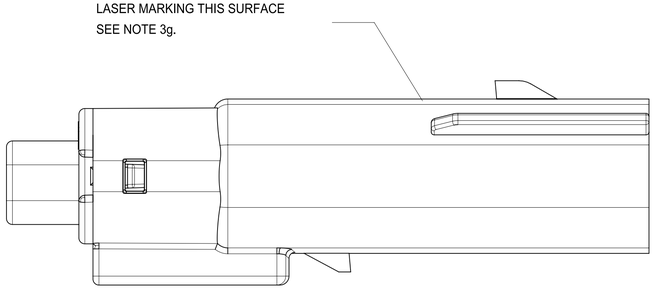

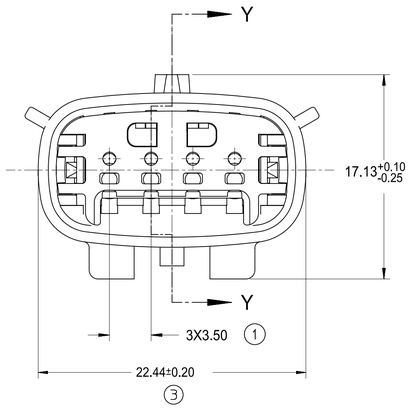

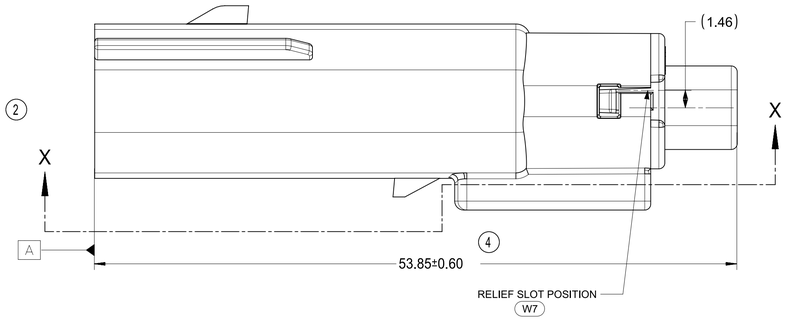

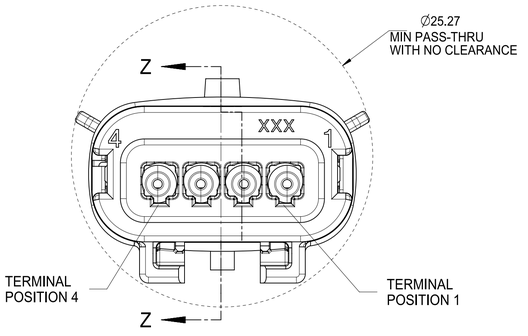

REAR VIEW
(WIRE HARNESS SIDE)

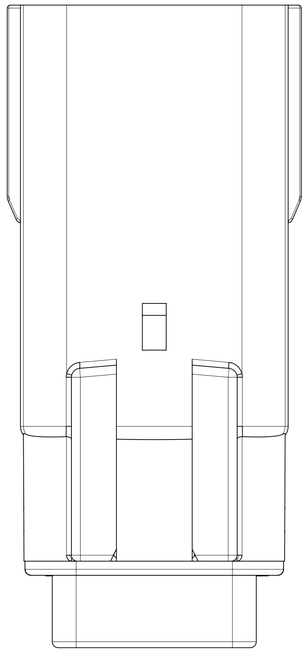

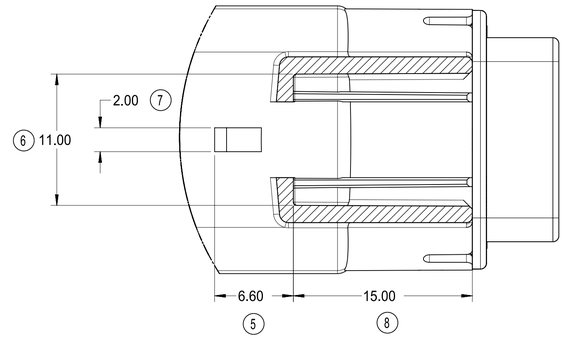

PARTIAL X-X
SCALE 4:1

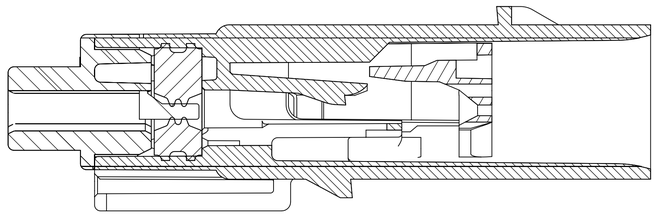

PRIMARY LOCK REINFORCEMENT (PLR) SHOWN
IN PRE-STAGED POSITION

SECTION Z-Z

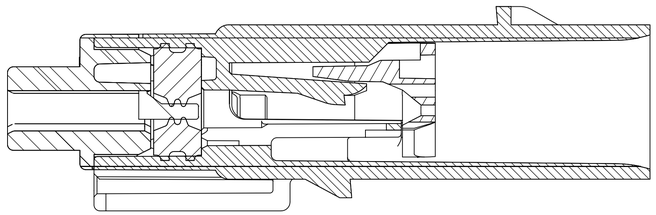

PRIMARY LOCK REINFORCEMENT (PLR) SHOWN
IN FINAL-LOCK POSITION

SECTION Y-Y

THIS DRAWING CONTAINS INFORMATION THAT IS PROPRIETARY TO MOLEX ELECTRONIC TECHNOLOGIES, LLC AND SHOULD NOT BE USED WITHOUT WRITTEN PERMISSION

FUNCTIONAL SYMBOLS	DIMENSION UNITS	SCALE	CURRENT REV DESC: ADDED 334814432 PART NUMBER
FA = 0	MM	4:1	
FC = 0	GENERAL TOLERANCES (UNLESS SPECIFIED)		
FP = 0	ANGULAR TOL	± 3'	
DIVISIONAL SYMBOLS	4 PLACES	±	
	3 PLACES	±	
	2 PLACES	± 0.100	
	1 PLACE	± 0.30	
	0 PLACES	±	
	DRAFT WHERE APPLICABLE MUST REMAIN WITHIN DIMENSIONS		

STATUS: Production
DRWN: Shekar S B 2025-10-15
CHK'D: Tom Smith 2025-10-28
APPR: Andy Proffitt 2025-10-28

THIRD ANGLE PROJECTION | DRAWING: D-SIZE | SERIES: 33481

molex

MX150 1X4 BLADE
SEALED ASSEMBLY MAT SEAL

PRODUCT CUSTOMER DRAWING

DOCUMENT NUMBER	DOC TYPE	DOC PART	REVISION
SD-33481-041	PSD	001	W9

MATERIAL NUMBER	CUSTOMER	SHEET NUMBER
	GENERAL MARKET	3 OF 5

SYSTEM PACKAGING

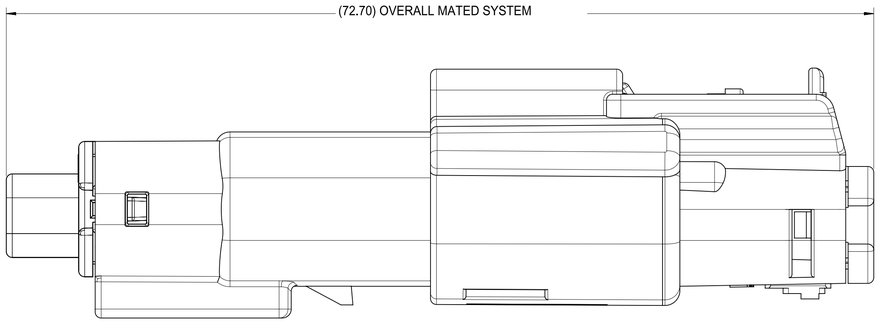

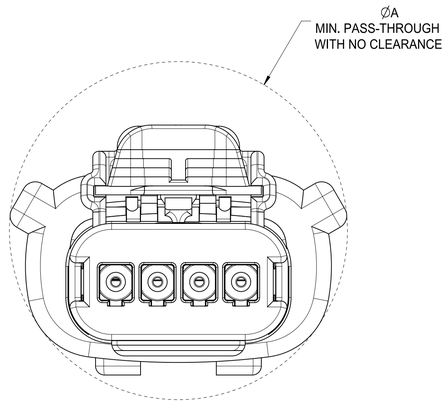

CHARTED DIMENSIONS

CONFIGURATION	A
MX150 1X4 RECPT SEALED ASSY - STANDARD	29.14
MX150 1X4 RECPT SEALED ASSY - ERGO	29.33
MX150 1X4 RECPT SEALED ASSY - SHORTING (SHRT) BAR	29.14

THIS DRAWING CONTAINS INFORMATION THAT IS PROPRIETARY TO MOLEX ELECTRONIC TECHNOLOGIES, LLC AND SHOULD NOT BE USED WITHOUT WRITTEN PERMISSION

FUNCTIONAL SYMBOLS
FA = 0
FC = 0
FD = 0

DIVISIONAL SYMBOLS

DIMENSION UNITS	SCALE
MM	4:1

GENERAL TOLERANCES (UNLESS SPECIFIED)

ANGULAR TOL	± 3°
4 PLACES	±
3 PLACES	±
2 PLACES	± 0.100
1 PLACE	± 0.30
0 PLACES	±

DRAFT WHERE APPLICABLE MUST REMAIN WITHIN DIMENSIONS

CURRENT REV DESC: ADDED 334814432 PART NUMBER

STATUS: Production
DRWN: Shekar S B 2025-10-15
CHK'D: Tom Smith 2025-10-28
APPR: Andy Proffitt 2025-10-28

THIRD ANGLE PROJECTION | DRAWING: D-SIZE | SERIES: 33481

molex

MX150 1X4 BLADE
SEALED ASSEMBLY MAT SEAL

PRODUCT CUSTOMER DRAWING

DOCUMENT NUMBER	DOC TYPE	DOC PART	REVISION
SD-33481-041	PSD	001	W9

MATERIAL NUMBER	CUSTOMER	SHEET NUMBER
	GENERAL MARKET	4 OF 5

BOM

ASSEMBLY PART NUMBER	COLOR	KEYING OPTION	CAVITY TYPE & STATUS (X = PLUGGED)				STATUS	COMMENTS
			1	2	3	4		
33481-0401	BLACK	A					OBSOLETE	
33481-0402	LT. GRAY	B					OBSOLETE	
33481-0403	BROWN	C					OBSOLETE	NOT RECOMMENDED, SEE P/N 33481-0424
33481-0404	GREEN	D					OBSOLETE	NOT RECOMMENDED, SEE P/N 33481-0425
33481-0405	BLACK	C					OBSOLETE	
33481-0406	BLACK	A				X	OBSOLETE	
33481-0407	LT. GRAY	B				X	OBSOLETE	
33481-0408	BROWN	C				X	OBSOLETE	
33481-0409	GREEN	D				X	OBSOLETE	
33481-0410	CUSTOM	TBD				X	OBSOLETE	
33481-0411	BLACK	A	X			X	OBSOLETE	
33481-0412	LT. GRAY	B	X			X	OBSOLETE	
33481-0413	BROWN	C	X			X	OBSOLETE	
33481-0414	GREEN	D	X			X	OBSOLETE	
33481-0415	CUSTOM	TBD	X			X	OBSOLETE	
33481-0416	BLACK	A	X	X	X	X	OBSOLETE	
33481-0417	LT. GRAY	B	X	X	X	X	OBSOLETE	
33481-0418	BROWN	C	X	X	X	X	OBSOLETE	NOT RECOMMENDED, SEE P/N 33481-0426
33481-0419	GREEN	D	X	X	X	X	OBSOLETE	NOT RECOMMENDED, SEE P/N 33481-0427
33481-0420	CUSTOM	TBD	X	X	X	X	OBSOLETE	
33481-0421	BLACK	A			X		OBSOLETE	
33481-0422	BLACK	A			X	X	OBSOLETE	
33481-0423	LT. GRAY	B	X	X			OBSOLETE	
33481-0424	DK. GRAY	C					OBSOLETE	
33481-0425	ST. GRAY	D					OBSOLETE	
33481-0426	DK. GRAY	C	X	X	X	X	OBSOLETE	
33481-0427	ST. GRAY	D	X	X	X	X	OBSOLETE	
33481-0428	YELLOW	A					OBSOLETE	
33481-0429	LT. GRAY	B		X	X		OBSOLETE	
33481-0430	BLACK	A	X		X		OBSOLETE	

ASSEMBLY PART NUMBER	COLOR	KEYING OPTION	CAVITY TYPE & STATUS (X = PLUGGED)				STATUS	COMMENTS
			1	2	3	4		
33481-4401	BLACK	A					SALEABLE	
33481-4402	LT. GRAY	B					SALEABLE	
33481-4403	BROWN	C					OBSOLETE	NOT RECOMMENDED, SEE P/N 33481-4424
33481-4404	GREEN	D					OBSOLETE	NOT RECOMMENDED, SEE P/N 33481-4425
33481-4405	BLACK	C					SALEABLE	
33481-4406	BLACK	A				X	SALEABLE	
33481-4407	LT. GRAY	B				X	SALEABLE	
33481-4408	BROWN	C				X	OBSOLETE	NOT RECOMMENDED
33481-4409	GREEN	D				X	OBSOLETE	NOT RECOMMENDED
33481-4410	CUSTOM	TBD				X	OBSOLETE	
33481-4411	BLACK	A	X			X	SALEABLE	
33481-4412	LT. GRAY	B	X			X	SALEABLE	
33481-4413	BROWN	C	X			X	OBSOLETE	NOT RECOMMENDED
33481-4414	GREEN	D	X			X	OBSOLETE	NOT RECOMMENDED
33481-4415	CUSTOM	TBD	X			X	OBSOLETE	
33481-4416	BLACK	A	X	X	X	X	SALEABLE	
33481-4417	LT. GRAY	B	X	X	X	X	SALEABLE	
33481-4418	BROWN	C	X	X	X	X	OBSOLETE	NOT RECOMMENDED, SEE P/N 33481-4426
33481-4419	GREEN	D	X	X	X	X	OBSOLETE	NOT RECOMMENDED, SEE P/N 33481-4427
33481-4420	CUSTOM	TBD	X	X	X	X	OBSOLETE	
33481-4421	BLACK	A			X		SALEABLE	
33481-4422	BLACK	A			X	X	SALEABLE	
33481-4423	LT. GRAY	B	X	X			SALEABLE	
33481-4424	DK. GRAY	C					SALEABLE	
33481-4425	ST. GRAY	D					SALEABLE	
33481-4426	DK. GRAY	C	X	X	X	X	SALEABLE	
33481-4427	ST. GRAY	D	X	X	X	X	SALEABLE	
33481-4428	YELLOW	A					SALEABLE	
33481-4429	LT. GRAY	B		X	X		SALEABLE	
33481-4430	BLACK	A	X		X		SALEABLE	
33481-4431	BLACK	A	X				SALEABLE	
(W9) 33481-4432	LIGHT BLUE	A					SALEABLE	
(W8) 33481-4433	BLACK	A		X	X		SALEABLE	

FUNCTIONAL SYMBOLS	THIS DRAWING CONTAINS INFORMATION THAT IS PROPRIETARY TO MOLEX ELECTRONIC TECHNOLOGIES, LLC AND SHOULD NOT BE USED WITHOUT WRITTEN PERMISSION		
FA = 0	DIMENSION UNITS: MM	SCALE: 1:1	CURRENT REV DESC: ADDED 334814432 PART NUMBER
FC = 0	GENERAL TOLERANCES (UNLESS SPECIFIED)		
FF = 0	ANGULAR TOL ± 3°		
DIVISIONAL SYMBOLS	4 PLACES ±		
	3 PLACES ±		
	2 PLACES ± 0.100		
	1 PLACE ± 0.30		
	0 PLACES ±		
	DRAFT WHERE APPLICABLE MUST REMAIN WITHIN DIMENSIONS		

STATUS: Production
DRWN: Shekar S B 2025-10-15
CHK'D: Tom Smith 2025-10-28
APPR: Andy Proffitt 2025-10-28

THIRD ANGLE PROJECTION | DRAWING: D-SIZE | SERIES: 33481 | MATERIAL NUMBER | CUSTOMER: GENERAL MARKET | SHEET NUMBER: 5 OF 5

molex

MX150 1X4 BLADE
SEALED ASSEMBLY MAT SEAL

PRODUCT CUSTOMER DRAWING

DOCUMENT NUMBER	DOC TYPE	DOC PART	REVISION
SD-33481-041	PSD	001	W9