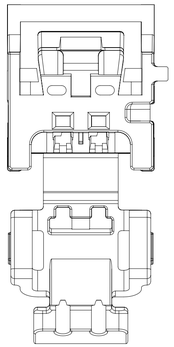

2 CIRCUIT RECEPTACLE BRIDGED
POLARIZATION OPTION A

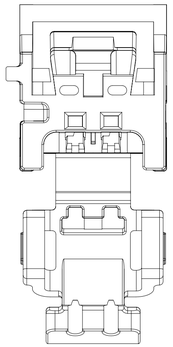

2 CIRCUIT RECEPTACLE BRIDGED
POLARIZATION OPTION B

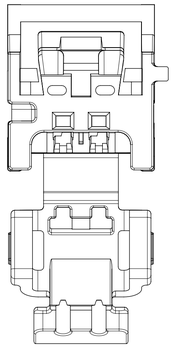

2 CIRCUIT RECEPTACLE BRIDGED
POLARIZATION OPTION C

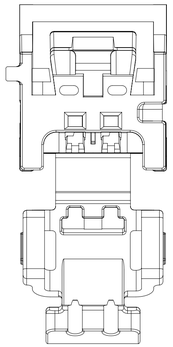

2 CIRCUIT RECEPTACLE BRIDGED
POLARIZATION OPTION D

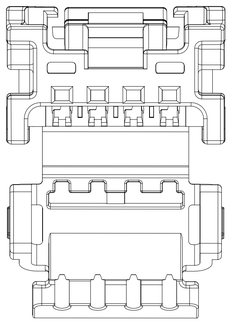

4 CIRCUIT RECEPTACLE NO BRIDGE
POLARIZATION OPTION A

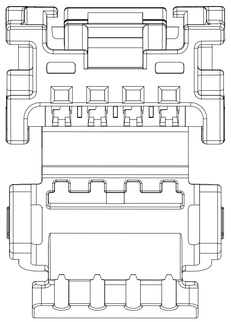

4 CIRCUIT RECEPTACLE NO BRIDGE
POLARIZATION OPTION B

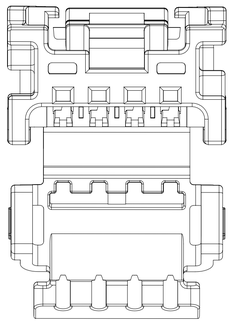

4 CIRCUIT RECEPTACLE NO BRIDGE
POLARIZATION OPTION C

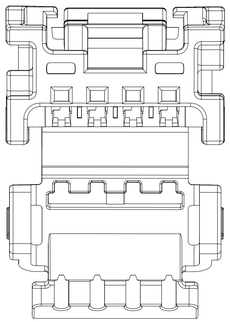

4 CIRCUIT RECEPTACLE NO BRIDGE
POLARIZATION OPTION D

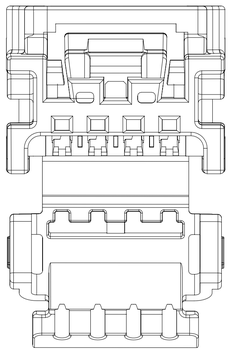

4 CIRCUIT RECEPTACLE BRIDGED
POLARIZATION OPTION A

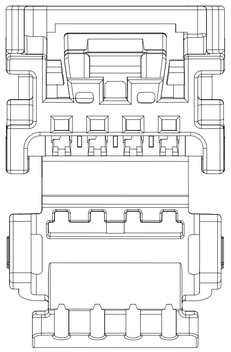

4 CIRCUIT RECEPTACLE BRIDGED
POLARIZATION OPTION B

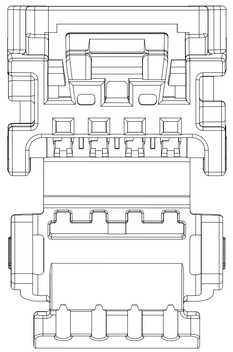

4 CIRCUIT RECEPTACLE BRIDGED
POLARIZATION OPTION C

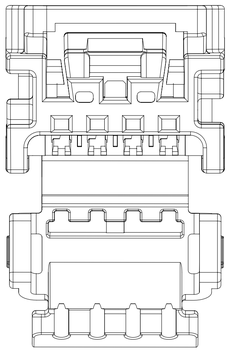

4 CIRCUIT RECEPTACLE BRIDGED
POLARIZATION OPTION D

NOTES: VALID UNLESS OTHERWISE SPECIFIED

1. GENERAL:
   a. APPLICATION SPECIFICATION SEE: AS-34791-020
   b. PRODUCT SPECIFICATION SEE: PS-34971-020
   c. PACKAGING SPECIFICATION PER MOLEX DRAWING: PK-31301-538
   d. PARTS MUST BE IN COMPLIANCE TO MOLEX CHEMICAL SUBSTANCES FOR PRODUCTS AND PACKAGING SPECIFICATION: QEHS-699000-301
   e. DATA MUST BE SUBMITTED UNDER THE MOLEX PART NUMBER TO IMDS (COMPANY ID#13255)
   f. FLAMMABILITY REQUIREMENT: PER ISO3795 OR GM3191
      1. BURN RATE 100 mm/MIN MAXIMUM
      2. MATERIAL MUST BE SELF EXTINGUISHING
   g. VISUAL DEFECTS SHALL MEET COSMETIC STANDARD PS-45499-002 (Class B)
   h. FOR TERMINAL USAGE, REFER TO MOLEX SALES DRAWING SD-560023-002 (PLAN OBSOLESCENCE IN 2024) AND 5600230800. L8

2. DESIGN - MATERIALS:
   a. MATERIAL: UNFILLED PBT

3. DESIGN - GEOMETRY:
   a. THIS IS A 100% CAD GENERATED PART. THE CAD MATHEMATICAL DATA IS THE MASTER FOR THIS PART. FOR DIMENSIONAL OR ANY INFORMATION NOT SHOWN ON THIS DRAWING, ANALYZE THE CAD MODEL.
   b. GEOMETRIC DIMENSIONS AND TOLERANCES PER ASME Y14.5M - 1994
   c. GENERAL TOLERANCES:
      LINEAR: PER DIN 16901 CODE B FOR PRECISION ENGINEERING
      ANGULAR: ±3˚
   d. EDGES AND UNDIMENSIONED DETAILS PER ISO13715
   e. CORNERS SHOWN AS SHARP TO BE R 0.2 MAX
   f. LETTERING SHALL BE 0.1 MAX RAISED IN 0.15 MAX RECESS PAD AND NOT PROTRUDE THE SURFACE. THIS INCLUDES RECYCLING CODE, PLANT AND CAVITY ID, VENDOR ID, CIRCUIT ID, AND PART SERIES NUMBER.

4. DESIGN - FUNCTIONALITY
   a. HINGE DOES NOT AFFECT FUNCTION OF THE PART.

REV	DESCRIPTION
L8	SHEET 1: ADDED TERMINAL SD-DRAWING 5600230800 IN NOTES 1-H SHEET 4: UPDATED CTX50 UNSEALED RCPT TERMINAL PART NUMBER AND STATUS
L7	MODELS UPDATED, NO GEOMETRY CHANGE SHEET 4: UPDATED SMALL TERMINAL PN ON TERMINAL BOM SHEET 4: ADDED TAPE AND REEL MATING PNs TO BOM
L3	DRAWING REMASTERED SHEET 3: ADDED DIM A FOR PASS THRU SHEET 4: ADDED DIM A TO BOM
L2	NX REMASTERING

INSPECTION BALLON NUMBER LOG
PER DRAWING REVISION: L8
LAST BALLOON USED: 16
ADDED BALLOON NUMBERS:
REMOVED BALLOON NUMBERS:

THIS DRAWING CONTAINS INFORMATION THAT IS PROPRIETARY TO MOLEX ELECTRONIC TECHNOLOGIES, LLC AND SHOULD NOT BE USED WITHOUT WRITTEN PERMISSION

FUNCTIONAL SYMBOLS: FA = 0, FC = 0, FP = 0

DIVISIONAL SYMBOLS

DIMENSION UNITS	SCALE
MM	6:1

GENERAL TOLERANCES (UNLESS SPECIFIED)	
ANGULAR TOL	± 0.5˚
4 PLACES	±
3 PLACES	±
2 PLACES	±
1 PLACE	±
0 PLACES	±

DRAFT WHERE APPLICABLE MUST REMAIN WITHIN DIMENSIONS

CURRENT REV DESC:

STATUS: Production
DRWN: Yann Chen 2023-10-20
CHK'D: Gang Li 2023-10-25
APPR: Colin Zhang 2023-10-30

THIRD ANGLE PROJECTION

DRAWING	SERIES
D-SIZE	34791

molex

MINI50 SINGLE ROW RECEPTACLE SALES DWG

PRODUCT SALES DRAWING

DOCUMENT NUMBER	DOC TYPE	DOC PART	REVISION
SD-34791-001	PSD	000	L8

MATERIAL NUMBER

CUSTOMER: GENERAL MARKET

SHEET NUMBER: 1 OF 4

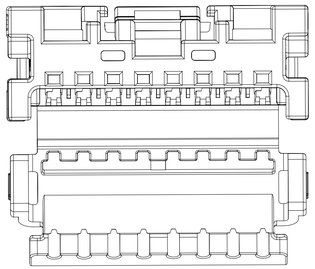

8 CIRCUIT RECEPTACLE NO BRIDGE
POLARIZATION OPTION A

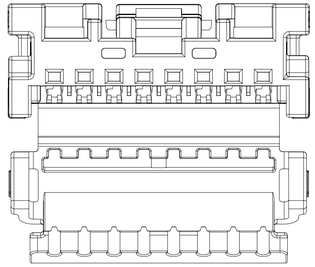

8 CIRCUIT RECEPTACLE NO BRIDGE
POLARIZATION OPTION B

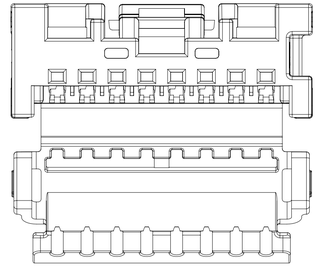

8 CIRCUIT RECEPTACLE NO BRIDGE
POLARIZATION OPTION C

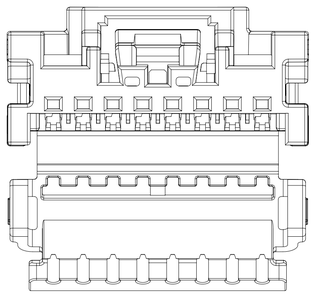

8 CIRCUIT RECEPTACLE BRIDGED
POLARIZATION OPTION A

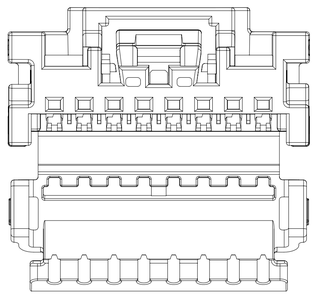

8 CIRCUIT RECEPTACLE BRIDGED
POLARIZATION OPTION B

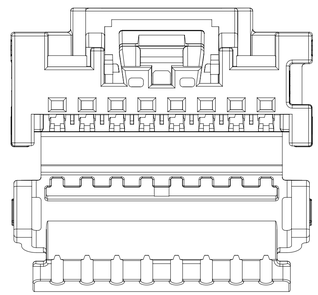

8 CIRCUIT RECEPTACLE BRIDGED
POLARIZATION OPTION C

2 CIRCUIT RECEPTACLE SHOWN (AS SHIPPED)

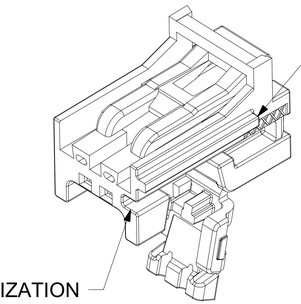

4 CIRCUIT RECEPTACLE SHOWN (AS SHIPPED)

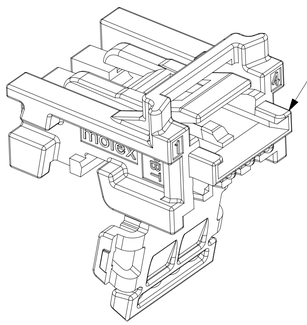

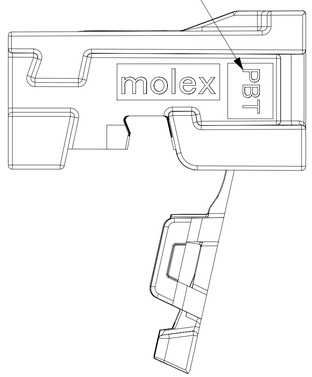

SCALE 7:1

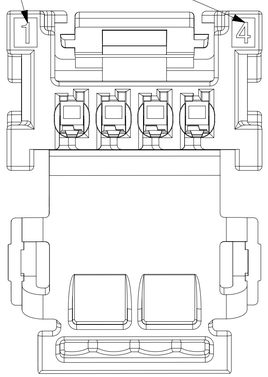

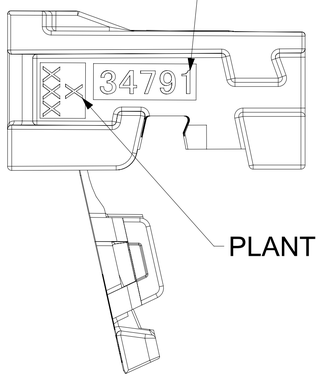

SCALE 7:1

FUNCTIONAL SYMBOLS	THIS DRAWING CONTAINS INFORMATION THAT IS PROPRIETARY TO MOLEX ELECTRONIC TECHNOLOGIES, LLC AND SHOULD NOT BE USED WITHOUT WRITTEN PERMISSION			
FA = 0	DIMENSION UNITS: MM	SCALE: 5:1	CURRENT REV DESC:	molex
FC = 0	GENERAL TOLERANCES (UNLESS SPECIFIED)			MINI50 SINGLE ROW RECEPTACLE SALES DWG
FP = 0	ANGULAR TOL ± 0.5°			
DIVISIONAL SYMBOLS	4 PLACES ±			PRODUCT SALES DRAWING
	3 PLACES ±		STATUS: Production	
	2 PLACES ±		DRWN: Yann Chen 2023-10-20	DOCUMENT NUMBER: SD-34791-001 / DOC TYPE: PSD / DOC PART: 000 / REVISION: L8
	1 PLACE ±		CHK'D: Gang Li 2023-10-25	
	0 PLACES ±		APPR: Colin Zhang 2023-10-30	
	DRAFT WHERE APPLICABLE MUST REMAIN WITHIN DIMENSIONS	THIRD ANGLE PROJECTION	DRAWING: D-SIZE / SERIES: 34791	MATERIAL NUMBER / CUSTOMER: GENERAL MARKET / SHEET NUMBER: 2 OF 4

NOTE: KEY A SHOWN AS REFERENCE

8 CIRCUIT

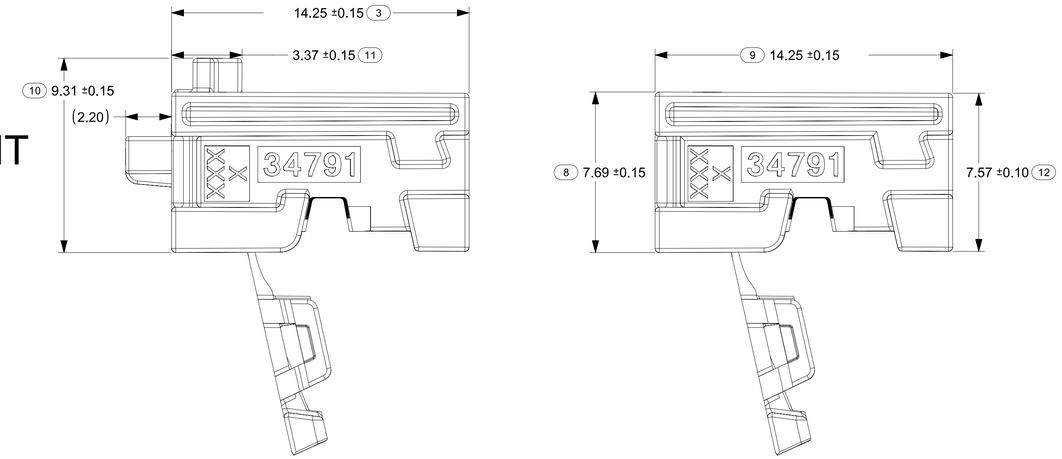

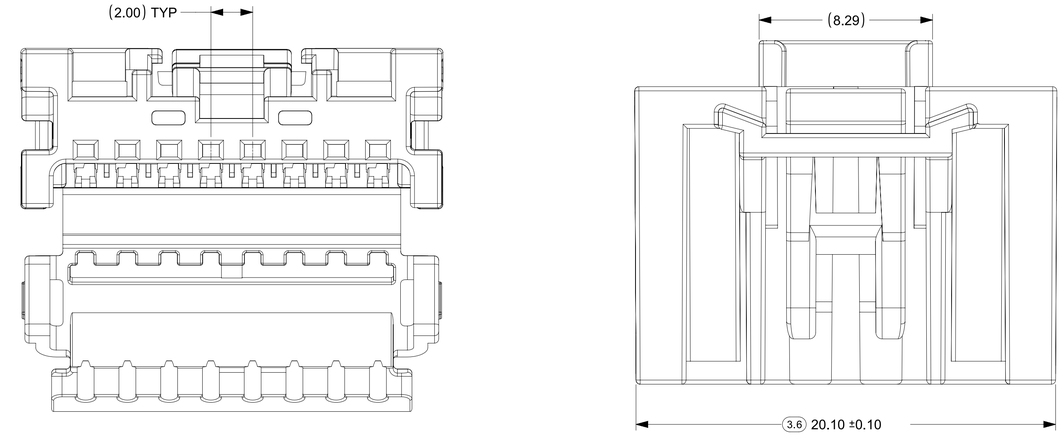

4 CIRCUIT

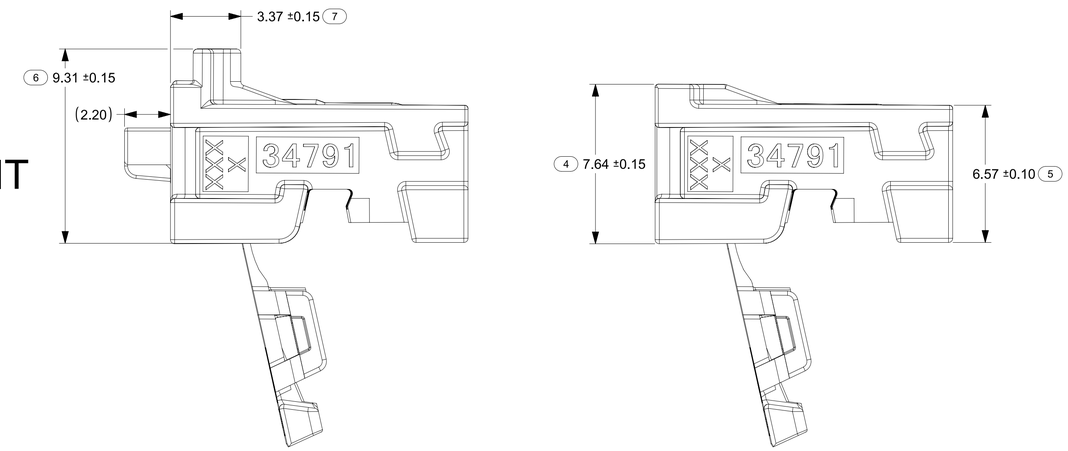

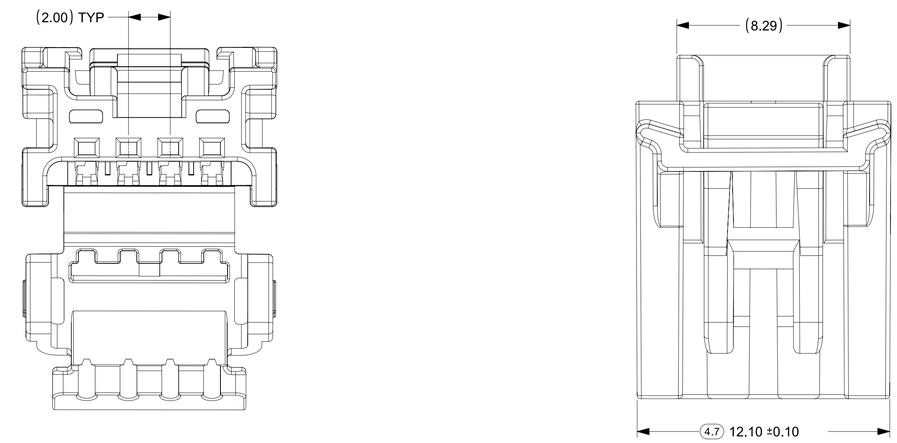

2 CIRCUIT

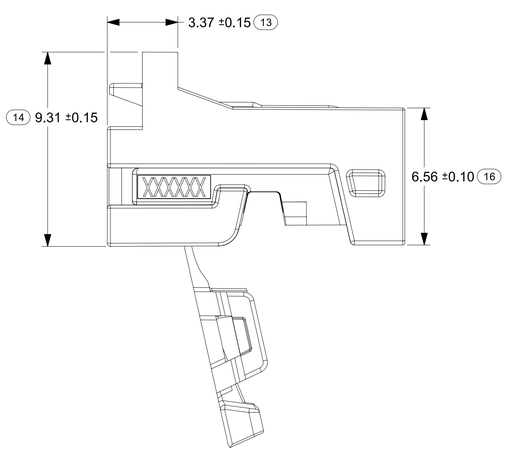

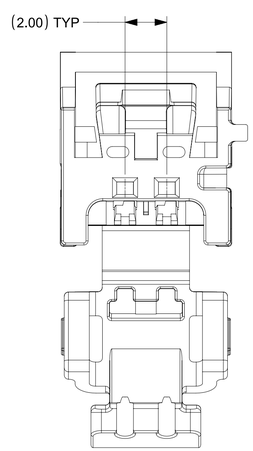

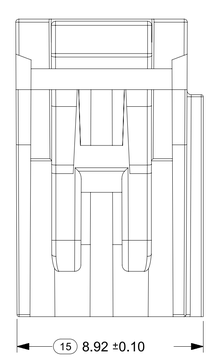

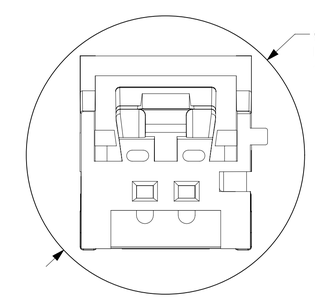

FUNCTIONAL SYMBOLS	THIS DRAWING CONTAINS INFORMATION THAT IS PROPRIETARY TO MOLEX ELECTRONIC TECHNOLOGIES, LLC AND SHOULD NOT BE USED WITHOUT WRITTEN PERMISSION		
EA = 0	DIMENSION UNITS: MM	SCALE: 7:1	CURRENT REV DESC:
EC = 0	GENERAL TOLERANCES (UNLESS SPECIFIED)		
EP = 0	ANGULAR TOL ± 0.5°		
DIVISIONAL SYMBOLS	4 PLACES ±		
	3 PLACES ±		
	2 PLACES ±		
	1 PLACE ±		
	0 PLACES ±		
	DRAFT WHERE APPLICABLE MUST REMAIN WITHIN DIMENSIONS		

STATUS: Production
DRWN: Yann Chen 2023-10-20
CHK'D: Gang Li 2023-10-25
APPR: Colin Zhang 2023-10-30

THIRD ANGLE PROJECTION | DRAWING: D-SIZE | SERIES: 34791

molex

MINI50 SINGLE ROW RECEPTACLE SALES DWG

PRODUCT SALES DRAWING

DOCUMENT NUMBER	DOC TYPE	DOC PART	REVISION
SD-34791-001	PSD	000	L8

MATERIAL NUMBER | CUSTOMER: GENERAL MARKET | SHEET NUMBER: 3 OF 4

FORMAT: TC-Karnish-C
TEMPLATE: 0
DATE: 2023/08/01

MINI50 RECEPTACLES

MATERIAL NUMBER BULK PACKAGING PK-31301-538	LOCK BRIDGE OPTION	CONFIGURATION	CIRCUIT	POL	COLOR	DIM A	MATING COMPONENT									
							SURFACE MOUNT TECHNOLOGY (SMT) HEADER-TIN		SURFACE MOUNT TECHNOLOGY (SMT) HEADER-GOLD		VERTICAL THRU HOLE HEADER			RIGHT ANGLE THRU HOLE HEADERS		
							TAPE AND REEL PACKAGING PK-31301-786	TUBE PACKAGING PK-31301-688	TAPE AND REEL PACKAGING PK-31301-786	TUBE PACKAGING PK-31301-688	TRAY PACKAGING PK-31301-440	TUBE PACKAGING PK-31301-688	TAPE AND REEL PACKAGING PK-47799-0001	TRAY PACKAGING PK-31301-440	TUBE PACKAGING PK-31301-688	TAPE AND REEL PACKAGING PK-47799-0001
34791-0040	NO	USCAR COMPATIBLE	4	A	BLACK	15.26	34912-8040	34912-9040	34912-6040	34912-5040	34792-0040	34792-9040	34792-8040	34793-0040	34793-9040	34793-8040
34791-0041	NO	USCAR COMPATIBLE	4	B	GRAY		34912-8041	34912-9041	34912-6041	34912-5041	34792-0041	34792-9041	34792-8041	34793-0041	34793-9041	34793-8041
34791-0042	NO	USCAR COMPATIBLE	4	C	DARK GRAY		34912-8042	34912-9042	34912-6042	34912-5042	34792-0042	34792-9042	34792-8042	34793-0042	34793-9042	34793-8042
34791-0043	NO	USCAR COMPATIBLE	4	D	GREEN		34912-8043	34912-9043	34912-6043	34912-5043	34792-0043	34792-9043	34792-8043	34793-0043	34793-9043	34793-8043
34791-0080	NO	USCAR COMPATIBLE	8	A	BLACK	22.52	34912-8080	34912-9080	34912-6080	34912-5080	34792-0080	34792-9080	34792-8080	34793-0080	34793-9080	34793-8080
34791-0081	NO	USCAR COMPATIBLE	8	B	GRAY		34912-8081	34912-9081	34912-6081	34912-5081	34792-0081	34792-9081	34792-8081	34793-0081	34793-9081	34793-8081
34791-0082	NO	USCAR COMPATIBLE	8	C	DARK GRAY		34912-8082	34912-9082	34912-6082	34912-5082	34792-0082	34792-9082	34792-8082	34793-0082	34793-9082	34793-8082
34791-0140	YES	USCAR COMPATIBLE	4	A	BLACK	16.09	34912-8040	34912-9040	34912-6040	34912-5040	34792-0040	34792-9040	34792-8040	34793-0040	34793-9040	34793-8040
34791-0141	YES	USCAR COMPATIBLE	4	B	GRAY		34912-8041	34912-9041	34912-6041	34912-5041	34792-0041	34792-9041	34792-8041	34793-0041	34793-9041	34793-8041
34791-0142	YES	USCAR COMPATIBLE	4	C	DARK GRAY		34912-8042	34912-9042	34912-6042	34912-5042	34792-0042	34792-9042	34792-8042	34793-0042	34793-9042	34793-8042
34791-0143	YES	USCAR COMPATIBLE	4	D	GREEN		34912-8043	34912-9043	34912-6043	34912-5043	34792-0043	34792-9043	34792-8043	34793-0043	34793-9043	34793-8043
34791-0180	YES	USCAR COMPATIBLE	8	A	BLACK	22.52	34912-8080	34912-9080	34912-6080	34912-5080	34792-0080	34792-9080	34792-8080	34793-0080	34793-9080	34793-8080
34791-0181	YES	USCAR COMPATIBLE	8	B	GRAY		34912-8081	34912-9081	34912-6081	34912-5081	34792-0081	34792-9081	34792-8081	34793-0081	34793-9081	34793-8081
34791-0182	YES	USCAR COMPATIBLE	8	C	DARK GRAY		34912-8082	34912-9082	34912-6082	34912-5082	34792-0082	34792-9082	34792-8082	34793-0082	34793-9082	34793-8082
34791-0020	YES	MOLEX	2	A	BLACK	13.33	34912-8020	34912-9020	34912-6020	34912-5020	N/A	N/A	N/A	N/A	N/A	N/A
34791-0021	YES	MOLEX	2	B	GRAY		34912-8021	34912-9021	34912-6021	34912-5021	N/A	N/A	N/A	N/A	N/A	N/A
34791-0022	YES	MOLEX	2	C	DARK GRAY		34912-8022	34912-9022	34912-6022	34912-5022	N/A	N/A	N/A	N/A	N/A	N/A
34791-0023	YES	MOLEX	2	D	GREEN		34912-8023	34912-9023	34912-6023	34912-5023	N/A	N/A	N/A	N/A	N/A	N/A

CTX50 UNSEALED RECEPTACLE TERMINALS

L8

PART NUMBER		MATERIAL	WIRE GAGE (mm^2)	GRIP	STATUS
D-WIND (LEFT PAYOFF)	B-WIND (RIGHT PAYOFF)				
560023-0448	560023-0450	COPPER ALLOY	0.35	LARGE	PLAN OBSOLESCENCE IN 2024
560023-0421	560023-0423	COPPER ALLOY	0.22	MEDIUM	PLAN OBSOLESCENCE IN 2024
560023-0444	560023-0445	COPPER ALLOY	0.13	SMALL	PLAN OBSOLESCENCE IN 2024
560023-0748	560023-0750	COPPER ALLOY	0.35	LARGE	SALEABLE
560023-0721	560023-0723	COPPER ALLOY	0.22	MEDIUM	SALEABLE
560023-0744	560023-0745	COPPER ALLOY	0.13	SMALL	SALEABLE

FUNCTIONAL SYMBOLS
FA = 0
FC = 0
FD = 0
DIVISIONAL SYMBOLS

THIS DRAWING CONTAINS INFORMATION THAT IS PROPRIETARY TO MOLEX ELECTRONIC TECHNOLOGIES, LLC AND SHOULD NOT BE USED WITHOUT WRITTEN PERMISSION

DIMENSION UNITS	SCALE
MM	7:1

GENERAL TOLERANCES (UNLESS SPECIFIED)

ANGULAR TOL	± 0.5°
4 PLACES	±
3 PLACES	±
2 PLACES	±
1 PLACE	±
0 PLACES	±

DRAFT WHERE APPLICABLE MUST REMAIN WITHIN DIMENSIONS

CURRENT REV DESC:

STATUS: Production
DRWN: Yann Chen 2023-10-20
CHK'D: Gang Li 2023-10-25
APPR: Colin Zhang 2023-10-30

THIRD ANGLE PROJECTION | DRAWING: D-SIZE | SERIES: 34791

molex

MINI50 SINGLE ROW RECEPTACLE SALES DWG

PRODUCT SALES DRAWING

DOCUMENT NUMBER	DOC TYPE	DOC PART	REVISION
SD-34791-001	PSD	000	L8

MATERIAL NUMBER | CUSTOMER: GENERAL MARKET | SHEET NUMBER: 4 OF 4

FORMAT TC-Ansi-D
REVISION: B
DATE: 2022/06/01