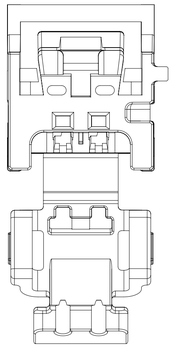

2 CIRCUIT RECEPTACLE BRIDGED
POLARIZATION OPTION A

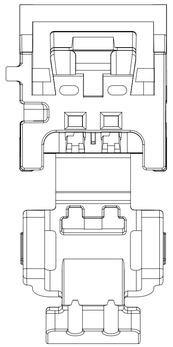

2 CIRCUIT RECEPTACLE BRIDGED
POLARIZATION OPTION B

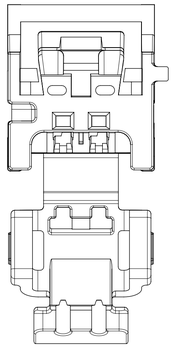

2 CIRCUIT RECEPTACLE BRIDGED
POLARIZATION OPTION C

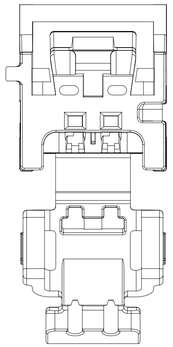

2 CIRCUIT RECEPTACLE BRIDGED
POLARIZATION OPTION D

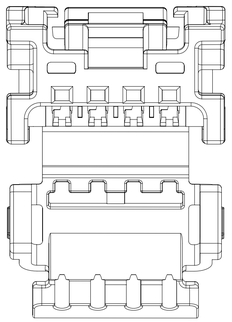

4 CIRCUIT RECEPTACLE NO BRIDGE
POLARIZATION OPTION A

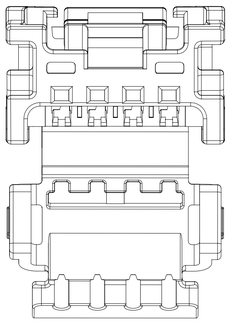

4 CIRCUIT RECEPTACLE NO BRIDGE
POLARIZATION OPTION B

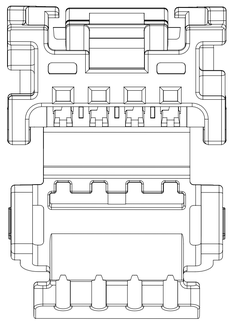

4 CIRCUIT RECEPTACLE NO BRIDGE
POLARIZATION OPTION C

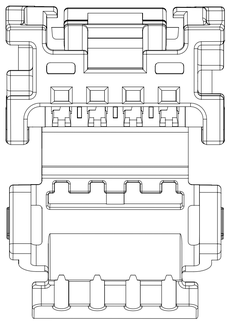

4 CIRCUIT RECEPTACLE NO BRIDGE
POLARIZATION OPTION D

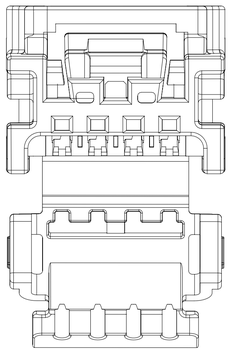

4 CIRCUIT RECEPTACLE BRIDGED
POLARIZATION OPTION A

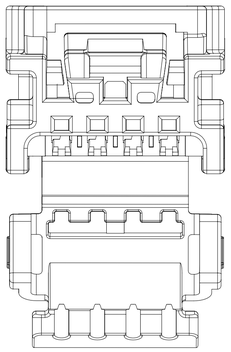

4 CIRCUIT RECEPTACLE BRIDGED
POLARIZATION OPTION B

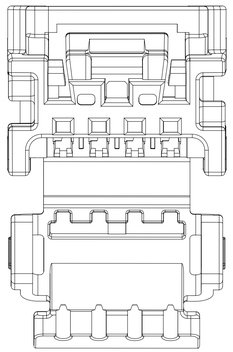

4 CIRCUIT RECEPTACLE BRIDGED
POLARIZATION OPTION C

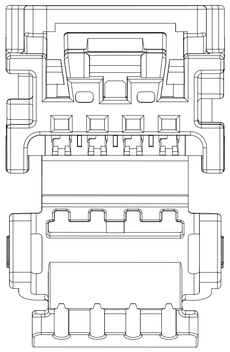

4 CIRCUIT RECEPTACLE BRIDGED
POLARIZATION OPTION D

NOTES: VALID UNLESS OTHERWISE SPECIFIED

1. GENERAL:
   a. APPLICATION SPECIFICATION SEE: AS-34791-020
   b. PRODUCT SPECIFICATION SEE: PS-34971-020
   c. PACKAGING SPECIFICATION PER MOLEX DRAWING: PK-31301-538
   d. PARTS MUST BE IN COMPLIANCE TO MOLEX CHEMICAL SUBSTANCES FOR PRODUCTS AND PACKAGING SPECIFICATION: QEHS-699000-301
   e. DATA MUST BE SUBMITTED UNDER THE MOLEX PART NUMBER TO IMDS (COMPANY ID#13255)
   f. FLAMMABILITY REQUIREMENT: PER ISO3795 OR GM3191
      1. BURN RATE 100 mm/MIN MAXIMUM
      2. MATERIAL MUST BE SELF EXTINGUISHING
   g. VISUAL DEFECTS SHALL MEET COSMETIC STANDARD PS-45499-002 (Class B)
   h. FOR TERMINAL USAGE, REFER TO MOLEX SALES DRAWING SD-560023-002 (PLAN OBSOLESCENCE IN 2024) AND 5600230800. L8

2. DESIGN - MATERIALS:
   a. MATERIAL: UNFILLED PBT

3. DESIGN - GEOMETRY:
   a. THIS IS A 100% CAD GENERATED PART. THE CAD MATHEMATICAL DATA IS THE MASTER FOR THIS PART. FOR DIMENSIONAL OR ANY INFORMATION NOT SHOWN ON THIS DRAWING, ANALYZE THE CAD MODEL.
   b. GEOMETRIC DIMENSIONS AND TOLERANCES PER ASME Y14.5M - 1994
   c. GENERAL TOLERANCES:
      LINEAR: PER DIN 16901 CODE B FOR PRECISION ENGINEERING
      ANGULAR: ±3˚
   d. EDGES AND UNDIMENSIONED DETAILS PER ISO13715
   e. CORNERS SHOWN AS SHARP TO BE R 0.2 MAX
   f. LETTERING SHALL BE 0.1 MAX RAISED IN 0.15 MAX RECESS PAD AND NOT PROTRUDE THE SURFACE. THIS INCLUDES RECYCLING CODE, PLANT AND CAVITY ID, VENDOR ID, CIRCUIT ID, AND PART SERIES NUMBER.

4. DESIGN - FUNCTIONALITY
   a. HINGE DOES NOT AFFECT FUNCTION OF THE PART.

REV	DESCRIPTION
L8	SHEET 1: ADDED TERMINAL SD-DRAWING 5600230800 IN NOTES 1-H SHEET 4: UPDATED CTX50 UNSEALED RCPT TERMINAL PART NUMBER AND STATUS
L7	MODELS UPDATED, NO GEOMETRY CHANGE SHEET 4: UPDATED SMALL TERMINAL PN ON TERMINAL BOM SHEET 4: ADDED TAPE AND REEL MATING PNs TO BOM
L3	DRAWING REMASTERED SHEET 3: ADDED DIM A FOR PASS THRU SHEET 4: ADDED DIM A TO BOM
L2	NX REMASTERING

INSPECTION BALLON NUMBER LOG
PER DRAWING REVISION: L8
LAST BALLOON USED: 16
ADDED BALLOON NUMBERS:
REMOVED BALLOON NUMBERS:

THIS DRAWING CONTAINS INFORMATION THAT IS PROPRIETARY TO MOLEX ELECTRONIC TECHNOLOGIES, LLC AND SHOULD NOT BE USED WITHOUT WRITTEN PERMISSION

FUNCTIONAL SYMBOLS: FA = 0, FC = 0, FP = 0

DIVISIONAL SYMBOLS

DIMENSION UNITS	SCALE
MM	6:1

GENERAL TOLERANCES (UNLESS SPECIFIED)	
ANGULAR TOL	± 0.5˚
4 PLACES	±
3 PLACES	±
2 PLACES	±
1 PLACE	±
0 PLACES	±

DRAFT WHERE APPLICABLE MUST REMAIN WITHIN DIMENSIONS

CURRENT REV DESC:

STATUS: Production
DRWN: Yann Chen 2023-10-20
CHK'D: Gang Li 2023-10-25
APPR: Colin Zhang 2023-10-30

THIRD ANGLE PROJECTION

DRAWING	SERIES
D-SIZE	34791

molex

MINI50 SINGLE ROW RECEPTACLE SALES DWG

PRODUCT SALES DRAWING

DOCUMENT NUMBER	DOC TYPE	DOC PART	REVISION
SD-34791-001	PSD	000	L8

MATERIAL NUMBER

CUSTOMER: GENERAL MARKET

SHEET NUMBER: 1 OF 4

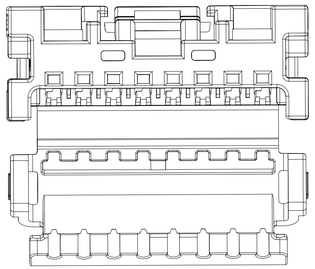

8 CIRCUIT RECEPTACLE NO BRIDGE
POLARIZATION OPTION A

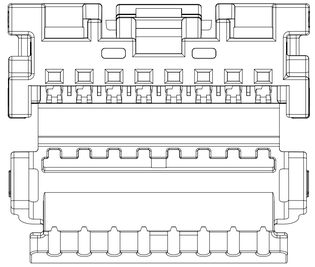

8 CIRCUIT RECEPTACLE NO BRIDGE
POLARIZATION OPTION B

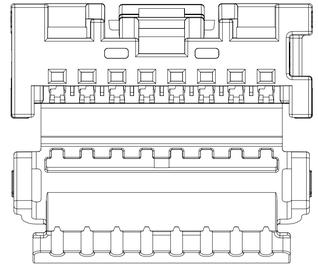

8 CIRCUIT RECEPTACLE NO BRIDGE
POLARIZATION OPTION C

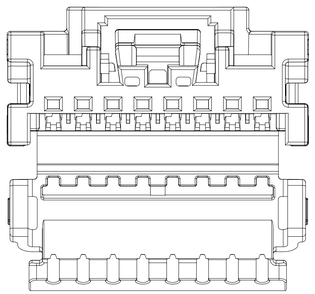

8 CIRCUIT RECEPTACLE BRIDGED
POLARIZATION OPTION A

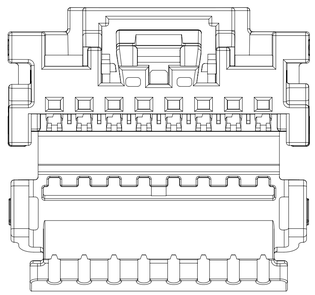

8 CIRCUIT RECEPTACLE BRIDGED
POLARIZATION OPTION B

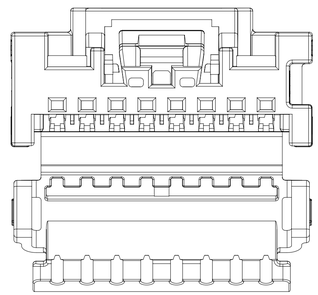

8 CIRCUIT RECEPTACLE BRIDGED
POLARIZATION OPTION C

2 CIRCUIT RECEPTACLE SHOWN (AS SHIPPED)

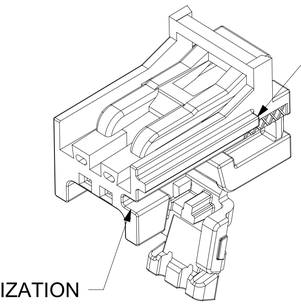

4 CIRCUIT RECEPTACLE SHOWN (AS SHIPPED)

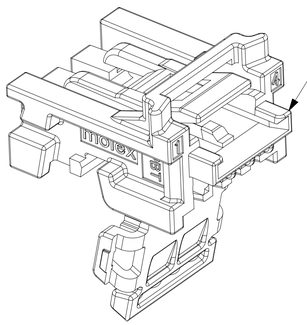

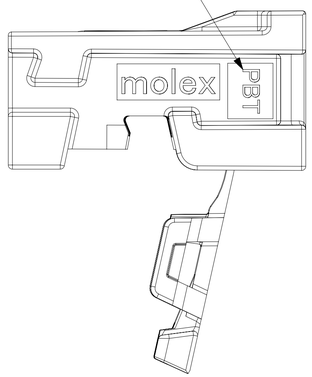

SCALE 7:1

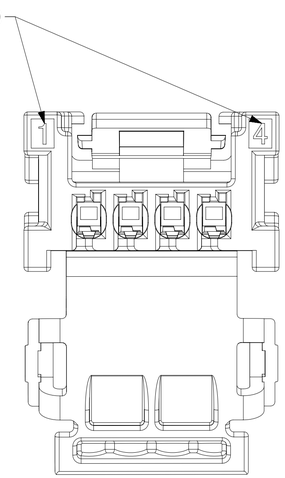

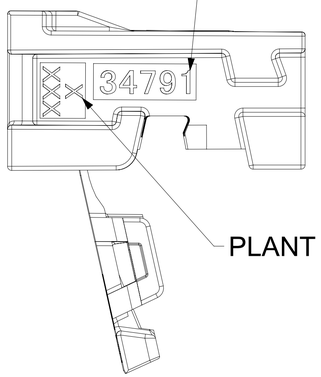

SCALE 7:1

THIS DRAWING CONTAINS INFORMATION THAT IS PROPRIETARY TO MOLEX ELECTRONIC TECHNOLOGIES, LLC AND SHOULD NOT BE USED WITHOUT WRITTEN PERMISSION

FUNCTIONAL SYMBOLS	DIMENSION UNITS	SCALE	CURRENT REV DESC:	molex
FA = 0	MM	5:1		
FC = 0	GENERAL TOLERANCES (UNLESS SPECIFIED)			MINI50 SINGLE ROW RECEPTACLE SALES DWG
FP = 0	ANGULAR TOL ± 0.5°			
DIVISIONAL SYMBOLS	4 PLACES ±			PRODUCT SALES DRAWING
	3 PLACES ±		STATUS: Production	
	2 PLACES ±		DRWN: Yann Chen 2023-10-20	DOCUMENT NUMBER: SD-34791-001 · DOC TYPE: PSD · DOC PART: 000 · REVISION: L8
	1 PLACE ±		CHK'D: Gang Li 2023-10-25	
	0 PLACES ±		APPR: Colin Zhang 2023-10-30	
	DRAFT WHERE APPLICABLE MUST REMAIN WITHIN DIMENSIONS		THIRD ANGLE PROJECTION · DRAWING: D-SIZE · SERIES: 34791	MATERIAL NUMBER · CUSTOMER: GENERAL MARKET · SHEET NUMBER: 2 OF 4

NOTE: KEY A SHOWN AS REFERENCE

8 CIRCUIT

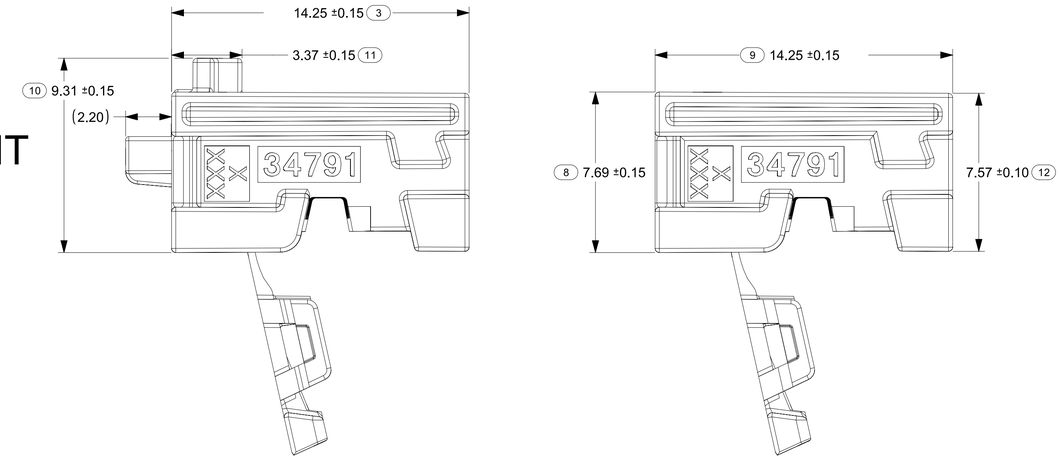

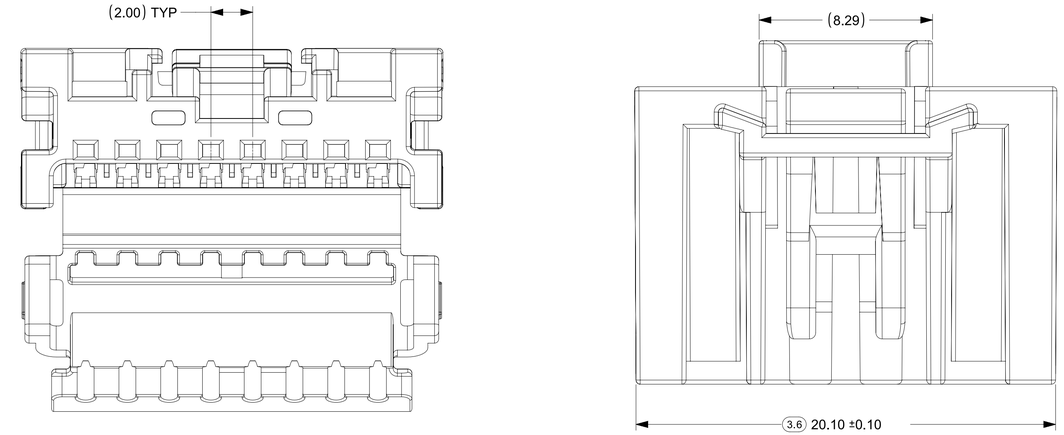

4 CIRCUIT

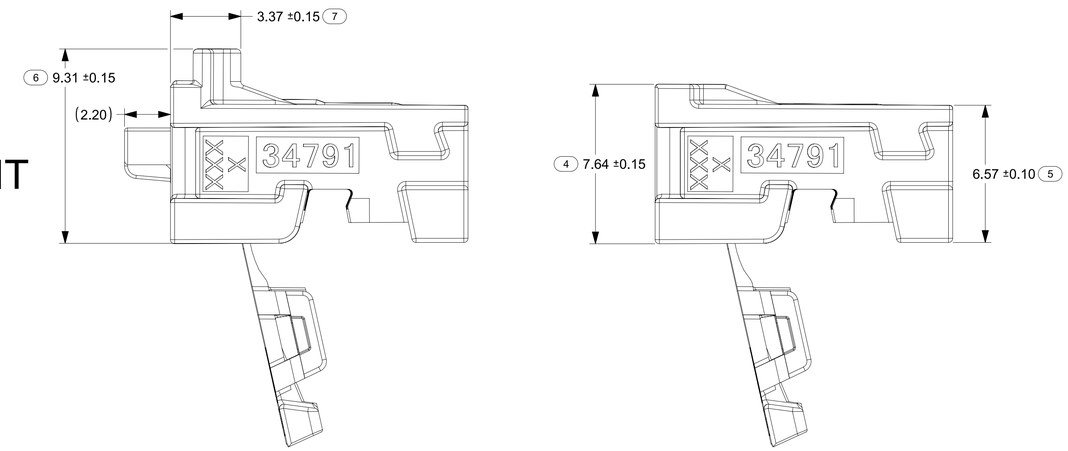

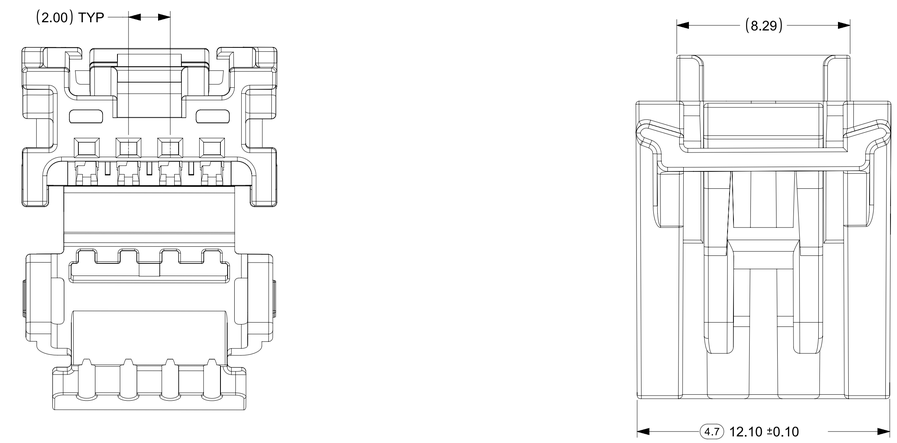

2 CIRCUIT

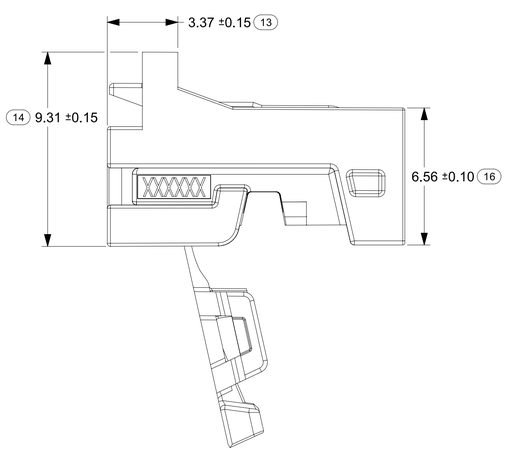

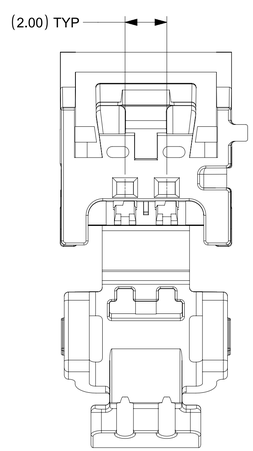

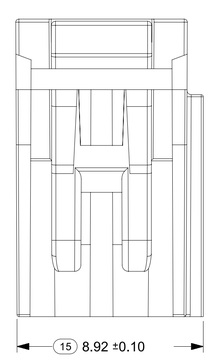

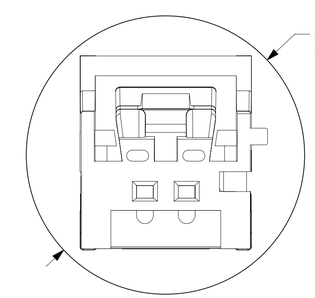

FUNCTIONAL SYMBOLS	THIS DRAWING CONTAINS INFORMATION THAT IS PROPRIETARY TO MOLEX ELECTRONIC TECHNOLOGIES, LLC AND SHOULD NOT BE USED WITHOUT WRITTEN PERMISSION		
EA = 0	DIMENSION UNITS: MM	SCALE: 7:1	CURRENT REV DESC:
EC = 0	GENERAL TOLERANCES (UNLESS SPECIFIED)		
EP = 0	ANGULAR TOL ± 0.5°		
DIVISIONAL SYMBOLS	4 PLACES ±		
	3 PLACES ±		
	2 PLACES ±		
	1 PLACE ±		
	0 PLACES ±		
	DRAFT WHERE APPLICABLE MUST REMAIN WITHIN DIMENSIONS		

STATUS: Production
DRWN: Yann Chen 2023-10-20
CHK'D: Gang Li 2023-10-25
APPR: Colin Zhang 2023-10-30

THIRD ANGLE PROJECTION | DRAWING: D-SIZE | SERIES: 34791

molex

MINI50 SINGLE ROW RECEPTACLE SALES DWG

PRODUCT SALES DRAWING

DOCUMENT NUMBER	DOC TYPE	DOC PART	REVISION
SD-34791-001	PSD	000	L8

MATERIAL NUMBER | CUSTOMER: GENERAL MARKET | SHEET NUMBER: 3 OF 4

FORMAT: TC-Karnish-C
TEMPLATE: 0
DATE: 2023/08/01

MINI50 RECEPTACLES

MATERIAL NUMBER BULK PACKAGING PK-31301-538	LOCK BRIDGE OPTION	CONFIGURATION	CIRCUIT	POL	COLOR	DIM A	MATING COMPONENT									
							SURFACE MOUNT TECHNOLOGY (SMT) HEADER-TIN		SURFACE MOUNT TECHNOLOGY (SMT) HEADER-GOLD		VERTICAL THRU HOLE HEADER			RIGHT ANGLE THRU HOLE HEADERS		
							TAPE AND REEL PACKAGING PK-31301-786	TUBE PACKAGING PK-31301-688	TAPE AND REEL PACKAGING PK-31301-786	TUBE PACKAGING PK-31301-688	TRAY PACKAGING PK-31301-440	TUBE PACKAGING PK-31301-688	TAPE AND REEL PACKAGING PK-47799-0001	TRAY PACKAGING PK-31301-440	TUBE PACKAGING PK-31301-688	TAPE AND REEL PACKAGING PK-47799-0001
34791-0040	NO	USCAR COMPATIBLE	4	A	BLACK	15.26	34912-8040	34912-9040	34912-6040	34912-5040	34792-0040	34792-9040	34792-8040	34793-0040	34793-9040	34793-8040
34791-0041	NO	USCAR COMPATIBLE	4	B	GRAY		34912-8041	34912-9041	34912-6041	34912-5041	34792-0041	34792-9041	34792-8041	34793-0041	34793-9041	34793-8041
34791-0042	NO	USCAR COMPATIBLE	4	C	DARK GRAY		34912-8042	34912-9042	34912-6042	34912-5042	34792-0042	34792-9042	34792-8042	34793-0042	34793-9042	34793-8042
34791-0043	NO	USCAR COMPATIBLE	4	D	GREEN		34912-8043	34912-9043	34912-6043	34912-5043	34792-0043	34792-9043	34792-8043	34793-0043	34793-9043	34793-8043
34791-0080	NO	USCAR COMPATIBLE	8	A	BLACK	22.52	34912-8080	34912-9080	34912-6080	34912-5080	34792-0080	34792-9080	34792-8080	34793-0080	34793-9080	34793-8080
34791-0081	NO	USCAR COMPATIBLE	8	B	GRAY		34912-8081	34912-9081	34912-6081	34912-5081	34792-0081	34792-9081	34792-8081	34793-0081	34793-9081	34793-8081
34791-0082	NO	USCAR COMPATIBLE	8	C	DARK GRAY		34912-8082	34912-9082	34912-6082	34912-5082	34792-0082	34792-9082	34792-8082	34793-0082	34793-9082	34793-8082
34791-0140	YES	USCAR COMPATIBLE	4	A	BLACK	16.09	34912-8040	34912-9040	34912-6040	34912-5040	34792-0040	34792-9040	34792-8040	34793-0040	34793-9040	34793-8040
34791-0141	YES	USCAR COMPATIBLE	4	B	GRAY		34912-8041	34912-9041	34912-6041	34912-5041	34792-0041	34792-9041	34792-8041	34793-0041	34793-9041	34793-8041
34791-0142	YES	USCAR COMPATIBLE	4	C	DARK GRAY		34912-8042	34912-9042	34912-6042	34912-5042	34792-0042	34792-9042	34792-8042	34793-0042	34793-9042	34793-8042
34791-0143	YES	USCAR COMPATIBLE	4	D	GREEN		34912-8043	34912-9043	34912-6043	34912-5043	34792-0043	34792-9043	34792-8043	34793-0043	34793-9043	34793-8043
34791-0180	YES	USCAR COMPATIBLE	8	A	BLACK	22.52	34912-8080	34912-9080	34912-6080	34912-5080	34792-0080	34792-9080	34792-8080	34793-0080	34793-9080	34793-8080
34791-0181	YES	USCAR COMPATIBLE	8	B	GRAY		34912-8081	34912-9081	34912-6081	34912-5081	34792-0081	34792-9081	34792-8081	34793-0081	34793-9081	34793-8081
34791-0182	YES	USCAR COMPATIBLE	8	C	DARK GRAY		34912-8082	34912-9082	34912-6082	34912-5082	34792-0082	34792-9082	34792-8082	34793-0082	34793-9082	34793-8082
34791-0020	YES	MOLEX	2	A	BLACK	13.33	34912-8020	34912-9020	34912-6020	34912-5020	N/A	N/A	N/A	N/A	N/A	N/A
34791-0021	YES	MOLEX	2	B	GRAY		34912-8021	34912-9021	34912-6021	34912-5021	N/A	N/A	N/A	N/A	N/A	N/A
34791-0022	YES	MOLEX	2	C	DARK GRAY		34912-8022	34912-9022	34912-6022	34912-5022	N/A	N/A	N/A	N/A	N/A	N/A
34791-0023	YES	MOLEX	2	D	GREEN		34912-8023	34912-9023	34912-6023	34912-5023	N/A	N/A	N/A	N/A	N/A	N/A

CTX50 UNSEALED RECEPTACLE TERMINALS

L8

PART NUMBER		MATERIAL	WIRE GAGE (mm^2)	GRIP	STATUS
D-WIND (LEFT PAYOFF)	B-WIND (RIGHT PAYOFF)				
560023-0448	560023-0450	COPPER ALLOY	0.35	LARGE	PLAN OBSOLESCENCE IN 2024
560023-0421	560023-0423	COPPER ALLOY	0.22	MEDIUM	PLAN OBSOLESCENCE IN 2024
560023-0444	560023-0445	COPPER ALLOY	0.13	SMALL	PLAN OBSOLESCENCE IN 2024
560023-0748	560023-0750	COPPER ALLOY	0.35	LARGE	SALEABLE
560023-0721	560023-0723	COPPER ALLOY	0.22	MEDIUM	SALEABLE
560023-0744	560023-0745	COPPER ALLOY	0.13	SMALL	SALEABLE

FUNCTIONAL SYMBOLS
FA = 0
FC = 0
FD = 0
DIVISIONAL SYMBOLS

THIS DRAWING CONTAINS INFORMATION THAT IS PROPRIETARY TO MOLEX ELECTRONIC TECHNOLOGIES, LLC AND SHOULD NOT BE USED WITHOUT WRITTEN PERMISSION

DIMENSION UNITS	SCALE
MM	7:1

GENERAL TOLERANCES (UNLESS SPECIFIED)

ANGULAR TOL	± 0.5°
4 PLACES	±
3 PLACES	±
2 PLACES	±
1 PLACE	±
0 PLACES	±

DRAFT WHERE APPLICABLE MUST REMAIN WITHIN DIMENSIONS

CURRENT REV DESC:

STATUS: Production
DRWN: Yann Chen 2023-10-20
CHK'D: Gang Li 2023-10-25
APPR: Colin Zhang 2023-10-30

THIRD ANGLE PROJECTION | DRAWING: D-SIZE | SERIES: 34791

molex

MINI50 SINGLE ROW RECEPTACLE SALES DWG

PRODUCT SALES DRAWING

DOCUMENT NUMBER	DOC TYPE	DOC PART	REVISION
SD-34791-001	PSD	000	L8

MATERIAL NUMBER | CUSTOMER: GENERAL MARKET | SHEET NUMBER: 4 OF 4

FORMAT TC-Ansi-D
REVISION: B
DATE: 2022/06/01

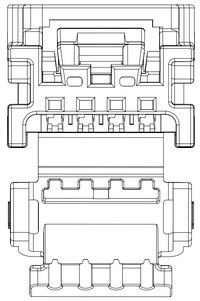

4CKT BRIDGED RECEPTACLE WITH CPA
POLARIZATION OPTION A

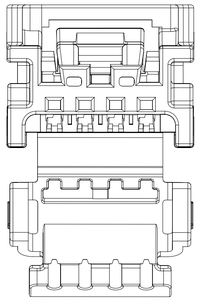

4CKT BRIDGED RECEPTACLE WITH CPA
POLARIZATION OPTION B

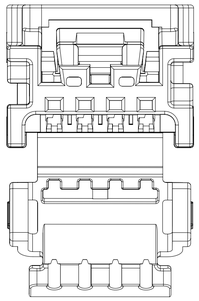

4CKT BRIDGED RECEPTACLE WITH CPA
POLARIZATION OPTION C

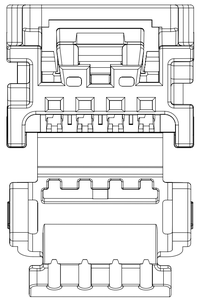

4CKT BRIDGED RECEPTACLE WITH CPA
POLARIZATION OPTION D

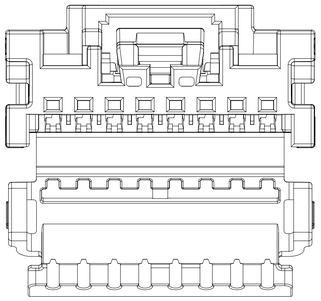

8CKT BRIDGED RECEPTACLE WITH CPA
POLARIZATION OPTION A

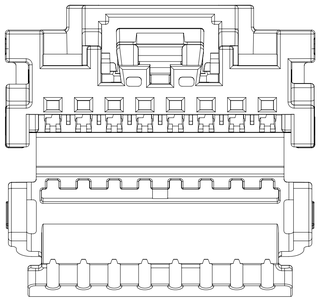

8CKT BRIDGED RECEPTACLE WITH CPA
POLARIZATION OPTION B

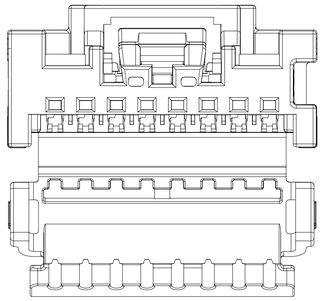

8CKT BRIDGED RECEPTACLE WITH CPA
POLARIZATION OPTION C

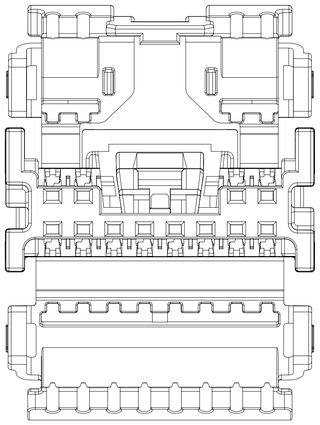

12CKT BRIDGED RECEPTACLE WITH CPA
POLARIZATION OPTION A

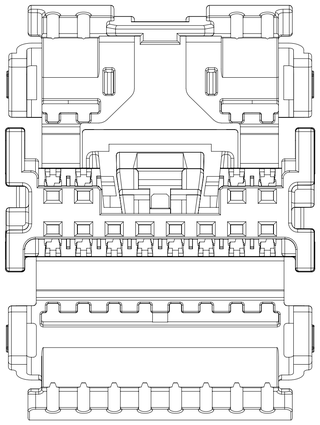

12CKT BRIDGED RECEPTACLE WITH CPA
POLARIZATION OPTION B

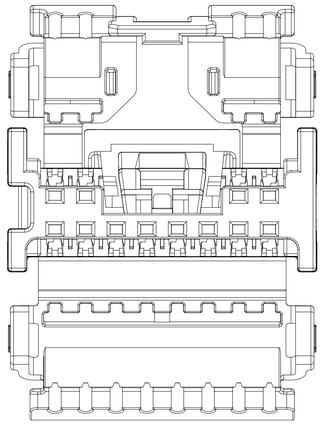

12CKT BRIDGED RECEPTACLE WITH CPA
POLARIZATION OPTION C

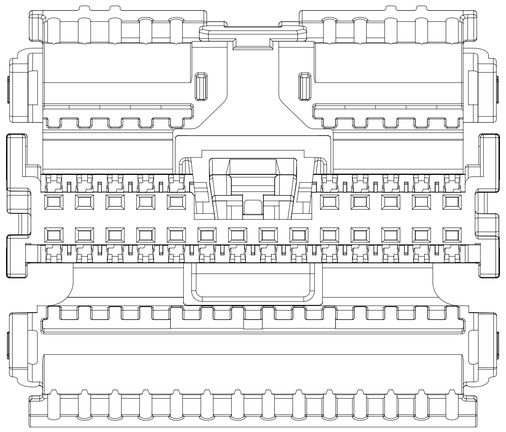

24CKT BRIDGED RECEPTACLE WITH CPA
POLARIZATION OPTION A

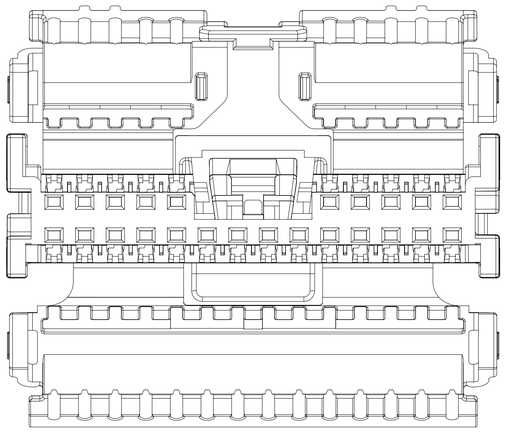

24CKT BRIDGED RECEPTACLE WITH CPA
POLARIZATION OPTION B

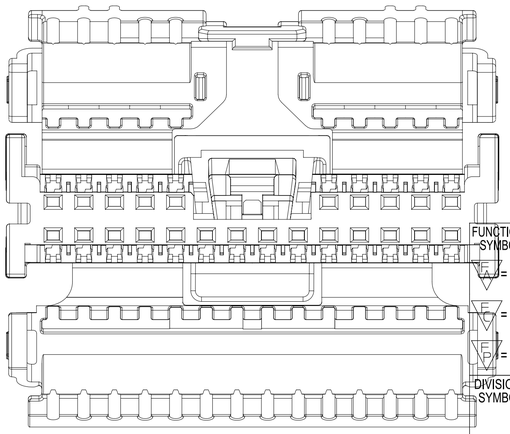

24CKT BRIDGED RECEPTACLE WITH CPA
POLARIZATION OPTION C

24CKT POLARIZATIONS ARE REPRESENTATIVE OF 16CKT AND 20CKT

NOTES: VALID UNLESS OTHERWISE SPECIFIED

1. GENERAL:
   a. APPLICATION SPECIFICATION SEE: AS-34791-020
   b. PRODUCT SPECIFICATION SEE: PS-34791-020
   c. PACKAGING SPECIFICATION PER MOLEX DRAWING: SEE CHART
   d. PARTS MUST BE IN COMPLIANCE TO MOLEX CHEMICAL SUBSTANCES FOR PRODUCTS AND PACKAGING SPECIFICATION: QEHS-699000-301
   e. DATA MUST BE SUBMITTED UNDER THE MOLEX PART NUMBER TO IMDS (COMPANY ID#13255)
   f. FLAMMABILITY REQUIREMENT: PER ISO3795 OR GM3191
      1. BURN RATE 100 mm/MIN MAXIMUM
      2. MATERIAL MUST BE SELF EXTINGUISHING
   g. VISUAL DEFECTS SHALL MEET COSMETIC STANDARD PS-45499-002 (Class B)
   M16 h. FOR TERMINAL USAGE, REFER TO MOLEX SALES DRAWING SD-560023-002 (PLAN OBSOLESCENCE IN 2024) AND 5600230800.

2. DESIGN - MATERIALS:
   a. SEE BOM FOR MATERIAL INFORMATION

3. DESIGN - GEOMETRY:
   a. THIS IS A 100% CAD GENERATED PART. THE CAD MATHEMATICAL DATA IS THE MASTER FOR THIS PART. FOR DIMENSIONAL OR ANY INFORMATION NOT SHOWN ON THIS DRAWING, ANALYZE THE CAD MODEL.
   b. GEOMETRIC DIMENSIONS AND TOLERANCES PER ASME Y14.5 - 2009
   c. GENERAL TOLERANCES:
      LINEAR: REFER TO DRAWING FRAME
      ANGULAR: ±3˚
   d. EDGES AND UNDIMENSIONED DETAILS PER ISO13715
   e. CORNERS SHOWN AS SHARP TO BE R 0.2 MAX
   f. LETTERING SHALL BE 0.1 MAX RAISED IN 0.15 MAX RECESS PAD AND NOT PROTRUDE THE SURFACE. THIS INCLUDES RECYCLING CODE, PLANT ID, CAVITY ID, VENDOR ID, CIRCUIT ID, AND PART SERIES NUMBER.
   g. DIMENSION APPLIES ONLY TO RECEPTACLES WITH LOCK BRIDGE OPTION.

4. DESIGN - FUNCTIONALITY:
   a. HINGE DOES NOT AFFECT FUNCTION OF THE PART.

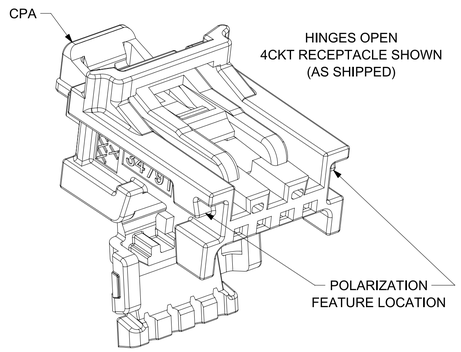

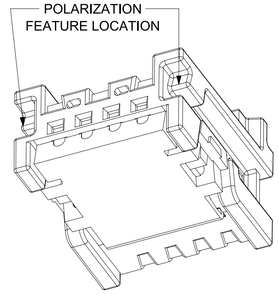

HINGES CLOSED
4CKT RECEPTACLE SHOWN
(AS ASSEMBLED)

REV	DESCRIPTION
M16	SHEET 1: ADDED TERMINAL SD-DRAWING 5600230800 IN NOTES 1-H SHEET 4: UPDATED CTX50 UNSEALED RCPT TERMINAL PART NUMBER AND STATUS
M15	SHEET1: UPDATED NOTES INFORMATION
M14	SHEET4: CHANGED RECYCLING CODE TO "XXXX" FOR DUAL ROW ONLY; WAS "PBT."
M13	SHEET 4: UPDATED GM PNs FOR 20CKT
M12	SHEET 4: UPDATE CTX50 BOM PNs FOR SMALL GRIP TERMINAL
M11	SHEET 1: REMOVED NOTE 1h SHEET 4: REMOVED PBT RCPT MATING COMPONENTS FOR 16-24CKT ON BOM TABLE
M10	SHEET 1: ADDED NOTE 1h SHEET 4: ADDED NOTE SYMBOL TO BOM
M9	DRAWING REMASTERED SHEET 1: CORRECTED NOTE 2 SHEET 2-3: UPDATED VIEWS-NO GEOMETRY CHANGES SHEET 4: ADDED TAPE AND REEL P/N'S TO BOM
M8	DIMENSION ADDED ON SHEET 3
M6	ADDED DATUMS AND DATUM NOTE
M5	REMASTERING DRAWING
M2	UPDATED 24 CKT

INSPECTION BALLOON LOG
PER DRAWING REVISION: M16

LAST BALLOON USED: 21

ADDED BALLOON NUMBERS:

REMOVED BALLOON NUMBERS:

FUNCTIONAL SYMBOLS
F = 0
F = 0
F = 0
DIVISIONAL SYMBOLS

THIS DRAWING CONTAINS INFORMATION THAT IS PROPRIETARY TO MOLEX ELECTRONIC TECHNOLOGIES, LLC AND SHOULD NOT BE USED WITHOUT WRITTEN PERMISSION

DIMENSION UNITS	SCALE
MM	5:1

GENERAL TOLERANCES (UNLESS SPECIFIED)	
ANGULAR TOL	± 1˚
4 PLACES	±
3 PLACES	±
2 PLACES	± 0.100
1 PLACE	± 0.20
0 PLACES	±

DRAFT WHERE APPLICABLE MUST REMAIN WITHIN DIMENSIONS

CURRENT REV DESC:

STATUS: Production
DRWN: Yann Chen 2023-10-20
CHK'D: Gang Li 2023-10-25
APPR: Colin Zhang 2023-10-30

THIRD ANGLE PROJECTION

DRAWING: A1-SIZE
SERIES: 34824

molex

MINI50 RECEPTACLE WITH CPA SALES DRAWING

PRODUCT SALES DRAWING

DOCUMENT NUMBER	DOC TYPE	DOC PART	REVISION
SD-34824-003	PSD	001	M16

MATERIAL NUMBER
CUSTOMER: GENERAL MARKET
SHEET NUMBER: 1 OF 4

FORMAT TC10sp0A1-1
REVISION: B
DATE: 2020/06/01

4CKT BRIDGE OPTION WITH CPA IN PRE-LOCK

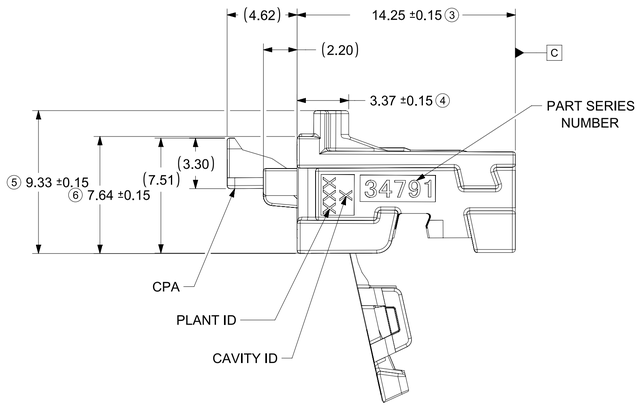

4CKT USCAR COMPATIBLE RECEPTACLE WITH CPA

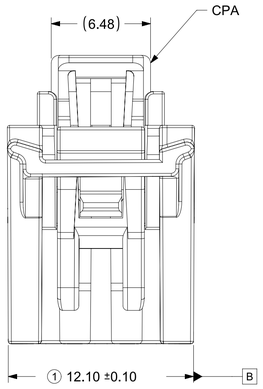

8CKT USCAR COMPATIBLE RECEPTACLE WITH CPA

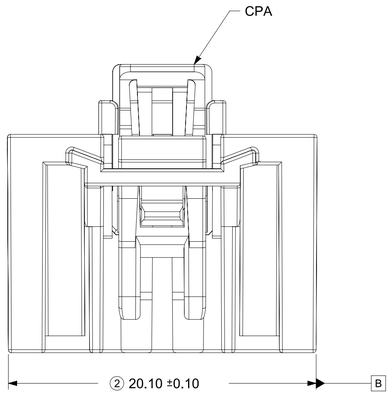

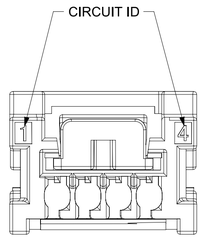

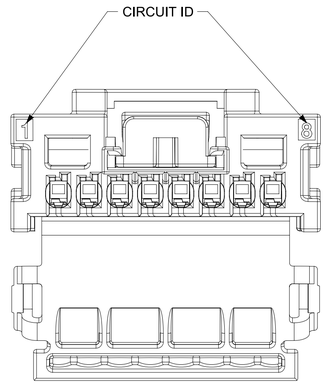

8CKT BRIDGE OPTION WITH CPA IN PRE-LOCK

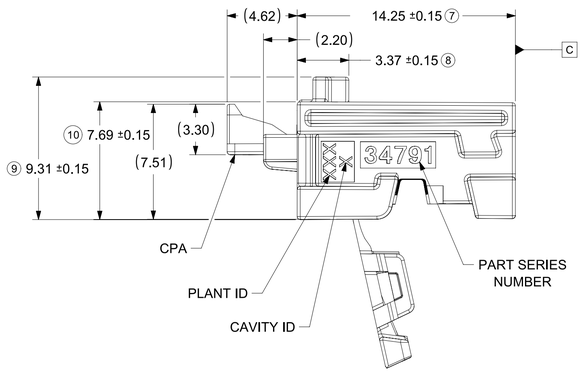

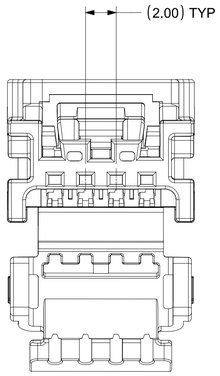

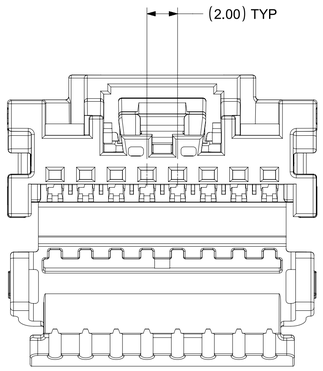

4CKT HINGE CLOSED CPA IN FINAL POSITION

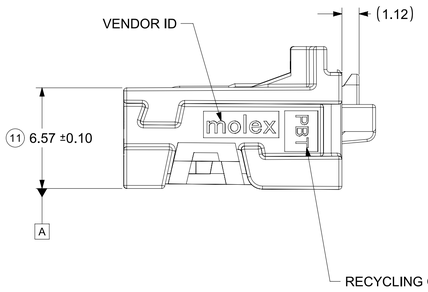

8CKT HINGE CLOSED CPA IN FINAL POSITION

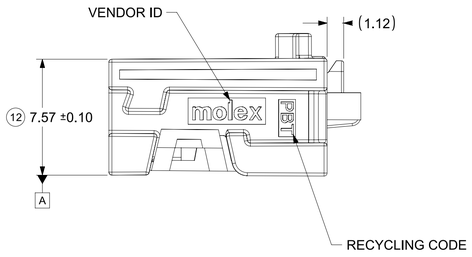

4CKT HINGE CLOSED

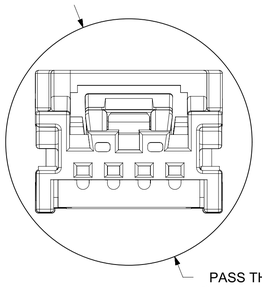

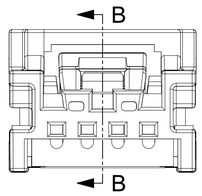

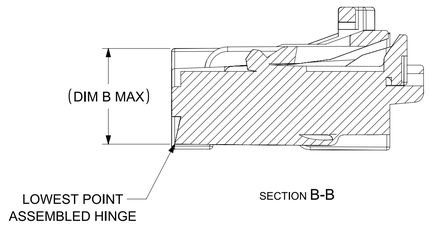

CHARTED DIMENSIONS		
DESCRIPTION	DIMENSION	
	A	B
4 CKT	16.09	6.77
8 CKT	22.52	7.77
12 CKT	23.18	8.47
16 CKT	26.87	8.47
20 CKT	30.65	8.47
24 CKT	34.47	8.47

THIS DRAWING CONTAINS INFORMATION THAT IS PROPRIETARY TO MOLEX ELECTRONIC TECHNOLOGIES, LLC AND SHOULD NOT BE USED WITHOUT WRITTEN PERMISSION

FUNCTIONAL SYMBOLS: FA = 0, FC = 0, FP = 0

DIVISIONAL SYMBOLS

DIMENSION UNITS	SCALE
MM	5:1

GENERAL TOLERANCES (UNLESS SPECIFIED)

ANGULAR TOL	± 1°
4 PLACES	±
3 PLACES	±
2 PLACES	± 0.100
1 PLACE	± 0.20
0 PLACES	±

DRAFT WHERE APPLICABLE MUST REMAIN WITHIN DIMENSIONS

CURRENT REV DESC:

STATUS: Production
DRWN: Yann Chen 2023-10-20
CHK'D: Gang Li 2023-10-25
APPR: Colin Zhang 2023-10-30

THIRD ANGLE PROJECTION

DRAWING	SERIES
A1-SIZE	34824

molex

MINI50 RECEPTACLE WITH CPA SALES DRAWING

PRODUCT SALES DRAWING

DOCUMENT NUMBER	DOC TYPE	DOC PART	REVISION
SD-34824-003	PSD	001	M16

MATERIAL NUMBER	CUSTOMER	SHEET NUMBER
	GENERAL MARKET	2 OF 4

FORMAT: TC-Engineer-A1
REVISION: D
DATE: 2022/08/01

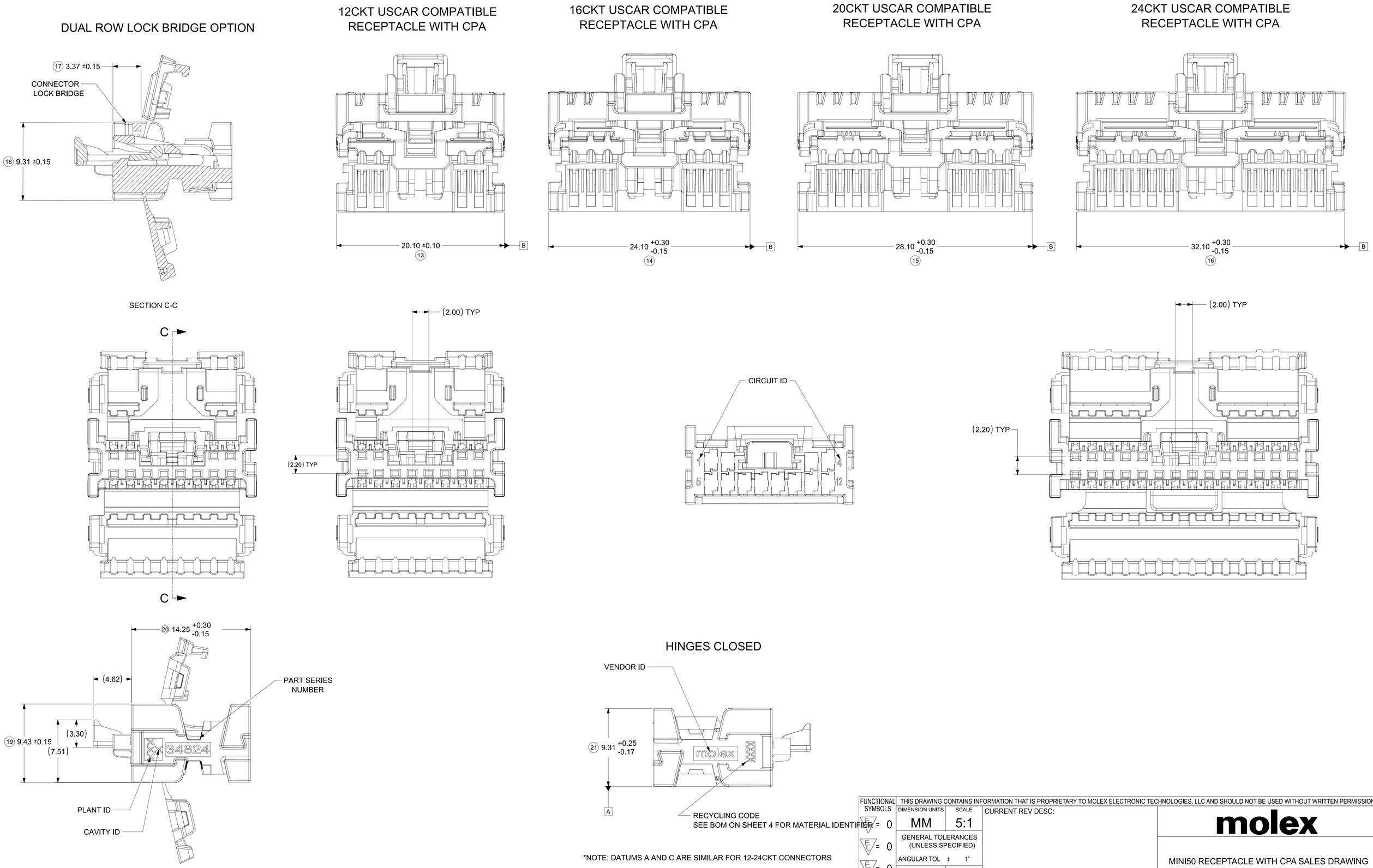

*NOTE: DIM 20 TOLERANCE IS +0.20/-0.15
FOR P/N 34824-2244/5/6

*NOTE: DATUMS A AND C ARE SIMILAR FOR 12-24CKT CONNECTORS

THIS DRAWING CONTAINS INFORMATION THAT IS PROPRIETARY TO MOLEX ELECTRONIC TECHNOLOGIES, LLC AND SHOULD NOT BE USED WITHOUT WRITTEN PERMISSION

FUNCTIONAL SYMBOLS	DIMENSION UNITS: MM	SCALE: 5:1	CURRENT REV DESC:
F = 0	GENERAL TOLERANCES (UNLESS SPECIFIED)		
F = 0	ANGULAR TOL ± 1°		
F = 0	4 PLACES ±		
DIVISIONAL SYMBOLS	3 PLACES ±		
	2 PLACES ± 0.100		STATUS: Production
	1 PLACE ± 0.20		DRWN: Yann Chen 2023-10-20
	0 PLACES ±		CHK'D: Gang Li 2023-10-25
			APPR: Colin Zhang 2023-10-30
	DRAFT WHERE APPLICABLE MUST REMAIN WITHIN DIMENSIONS	THIRD ANGLE PROJECTION	DRAWING: A1-SIZE; SERIES: 34824

molex

MINI50 RECEPTACLE WITH CPA SALES DRAWING

PRODUCT SALES DRAWING

DOCUMENT NUMBER	DOC TYPE	DOC PART	REVISION
SD-34824-003	PSD	001	M16

MATERIAL NUMBER	CUSTOMER	SHEET NUMBER
	GENERAL MARKET	3 OF 4

SINGLE ROW ASSEMBLY
(RECEPTACLE WITH CPA)

MOLEX MATERIAL NUMBER BULK PACKAGING PK-31301-538	GENERAL MOTORS PART NUMBER	CONFIGURATION	MATERIAL TYPE	CIRCUIT	POL	COLOR	MATING COMPONENT							
							SURFACE MOUNT TECHNOLOGY (SMT) HEADER		VERTICAL THRU HOLE HEADER			RIGHT ANGLE THRU HOLE HEADER		
							TAPE AND REEL PACKAGING PK-31301-786	TUBE PACKAGING PK-31301-688	TRAY PACKAGING PK-31301-440	TUBE PACKAGING PK-31301-688	TAPE AND REEL PACKAGING PK-47799-0001	TRAY PACKAGING PK-31301-440	TUBE PACKAGING PK-31301-688	TAPE AND REEL PACKAGING PK-47799-0001
34791-5140	13507113	USCAR	PBT	4	A	BLACK	34912-8040	34912-9040	34792-0040	34792-9040	34792-8040	34793-0040	34793-9040	34793-8040
34791-5141	13507115	USCAR		4	B	LIGHT GRAY	34912-8041	34912-9041	34792-0041	34792-9041	34792-8041	34793-0041	34793-9041	34793-8041
34791-5142	13507116	USCAR		4	C	DARK GRAY	34912-8042	34912-9042	34792-0042	34792-9042	34792-8042	34793-0042	34793-9042	34793-8042
34791-5143	13507117	USCAR		4	D	GREEN	34912-8043	34912-9043	34792-0043	34792-9043	34792-8043	34793-0043	34793-9043	34793-8043
34791-5180	13507118	USCAR		8	A	BLACK	34912-8080	34912-9080	34792-0080	34792-9080	34792-8080	34793-0080	34793-9080	34793-8080
34791-5181	13507119	USCAR		8	B	LIGHT GRAY	34912-8081	34912-9081	34792-0081	34792-9081	34792-8081	34793-0081	34793-9081	34793-8081
34791-5182	13507120	USCAR		8	C	DARK GRAY	34912-8082	34912-9082	34792-0082	34792-9082	34792-8082	34793-0082	34793-9082	34793-8082

DUAL ROW ASSEMBLY
(RECEPTACLE WITH CPA)

MOLEX MATERIAL NUMBER BULK PACKAGING PK-31301-538	GENERAL MOTORS PART NUMBER	CONFIGURATION	MATERIAL TYPE	CIRCUIT	POL	COLOR	MATING COMPONENT							
							SURFACE MOUNT TECHNOLOGY (SMT) HEADER		VERTICAL THRU HOLE HEADER			RIGHT ANGLE THRU HOLE HEADER		
							TAPE AND REEL PACKAGING PK-31301-786	TUBE PACKAGING PK-31301-688	TRAY PACKAGING PK-31301-440	TUBE PACKAGING PK-31301-688	TAPE AND REEL PACKAGING PK-47799-0001	TRAY PACKAGING PK-31301-440	TUBE PACKAGING PK-31301-688	TAPE AND REEL PACKAGING PK-47799-0001
34824-2164	N/A	USCAR	ECOPAXX	16	A	BLACK	34897-8160	34897-9160	34825-0160	34825-9160	34825-8160	34826-0160	34826-9160	34826-8160
34824-2165	N/A	USCAR		16	B	LIGHT GRAY	34897-8161	34897-9161	34825-0161	34825-9161	34825-8161	34826-0161	34826-9161	34826-8161
34824-2166	N/A	USCAR		16	C	DARK GRAY	34897-8162	34897-9162	34825-0162	34825-9162	34825-8162	34826-0162	34826-9162	34826-8162
34824-2204	13544280	USCAR		20	A	BLACK	34897-8200	34897-9200	34825-0200	34825-9200	34825-8200	34826-0200	34826-9200	34826-8200
34824-2205	13544281	USCAR		20	B	LIGHT GRAY	34897-8201	34897-9201	34825-0201	34825-9201	34825-8201	34826-0201	34826-9201	34826-8201
34824-2206	13544282	USCAR		20	C	DARK GRAY	34897-8202	34897-9202	34825-0202	34825-9202	34825-8202	34826-0202	34826-9202	34826-8202
34824-2244	N/A	USCAR		24	A	BLACK	34897-8240	34897-9240	34825-0240	34825-9240	34825-8240	34826-0240	34826-9240	34826-8240
34824-2245	N/A	USCAR		24	B	LIGHT GRAY	34897-8241	34897-9241	34825-0241	34825-9241	34825-8241	34826-0241	34826-9241	34826-8241
34824-2246	N/A	USCAR		24	C	DARK GRAY	34897-8242	34897-9242	34825-0242	34825-9242	34825-8242	34826-0242	34826-9242	34826-8242
34824-5124	13507121	USCAR	PBT	12	A	BLACK	34897-8120	34897-9120	34825-0124	34825-9124	34825-8124	34826-0124	34826-9124	34826-8124
34824-5125	13507122	USCAR		12	B	LIGHT GRAY	34897-8121	34897-9121	34825-0125	34825-9125	34825-8125	34826-0125	34826-9125	34826-8125
34824-5126	13507114	USCAR		12	C	DARK GRAY	34897-8122	34897-9122	34825-0126	34825-9126	34825-8126	34826-0126	34826-9126	34826-8126

*NOTE: CONFIGURATION CONSISTS OF AN EXPANSION OF THE 12CKT USCAR-COMPATIBLE CONFIGURATION TO ALLOW FOR 16, 20, AND 24 CIRCUITS

MINI50 CPA (APPLIED TO SINGLE & DUAL ROW BRIDGED RECEPTACLES)

MATERIAL NUMBER	COLOR	MATING COMPONENT
34824-7000	NATURAL	SEE CHARTS ABOVE

CTX50 UNSEALED RECEPTACLE TERMINALS

M16

PART NUMBER		MATERIAL	WIRE GAGE (mm²)	GRIP	STATUS
D-WIND (LEFT PAYOFF)	B-WIND (RIGHT PAYOFF)				
560023-0448	560023-0450	COPPER ALLOY	0.35	LARGE	PLAN OBSOLESCENCE IN 2024
560023-0421	560023-0423	COPPER ALLOY	0.22	MEDIUM	PLAN OBSOLESCENCE IN 2024
560023-0444	560023-0445	COPPER ALLOY	0.13	SMALL	PLAN OBSOLESCENCE IN 2024
560023-0748	560023-0750	COPPER ALLOY	0.35	LARGE	SALEABLE
560023-0721	560023-0723	COPPER ALLOY	0.22	MEDIUM	SALEABLE
560023-0744	560023-0745	COPPER ALLOY	0.13	SMALL	SALEABLE

THIS DRAWING CONTAINS INFORMATION THAT IS PROPRIETARY TO MOLEX ELECTRONIC TECHNOLOGIES, LLC AND SHOULD NOT BE USED WITHOUT WRITTEN PERMISSION

FUNCTIONAL SYMBOLS: FA = 0, FC = 0, FP = 0

DIVISIONAL SYMBOLS

DIMENSION UNITS: MM | SCALE: 1:1

GENERAL TOLERANCES (UNLESS SPECIFIED)

ANGULAR TOL	± 1°
4 PLACES	±
3 PLACES	±
2 PLACES	± 0.100
1 PLACE	± 0.20
0 PLACES	±

DRAFT WHERE APPLICABLE MUST REMAIN WITHIN DIMENSIONS

CURRENT REV DESC:

STATUS: Production
DRWN: Yann Chen 2023-10-20
CHK'D: Gang Li 2023-10-25
APPR: Colin Zhang 2023-10-30

THIRD ANGLE PROJECTION | DRAWING: A1-SIZE | SERIES: 34824

molex

MINI50 RECEPTACLE WITH CPA SALES DRAWING

PRODUCT SALES DRAWING

DOCUMENT NUMBER	DOC TYPE	DOC PART	REVISION
SD-34824-003	PSD	001	M16

MATERIAL NUMBER | CUSTOMER: GENERAL MARKET | SHEET NUMBER: 4 OF 4