molex

GPEC IV 95 WAY RECEPTACLE SEALED ASSEMBLY MAT SEAL

BOM AND PIN OUT SHEET

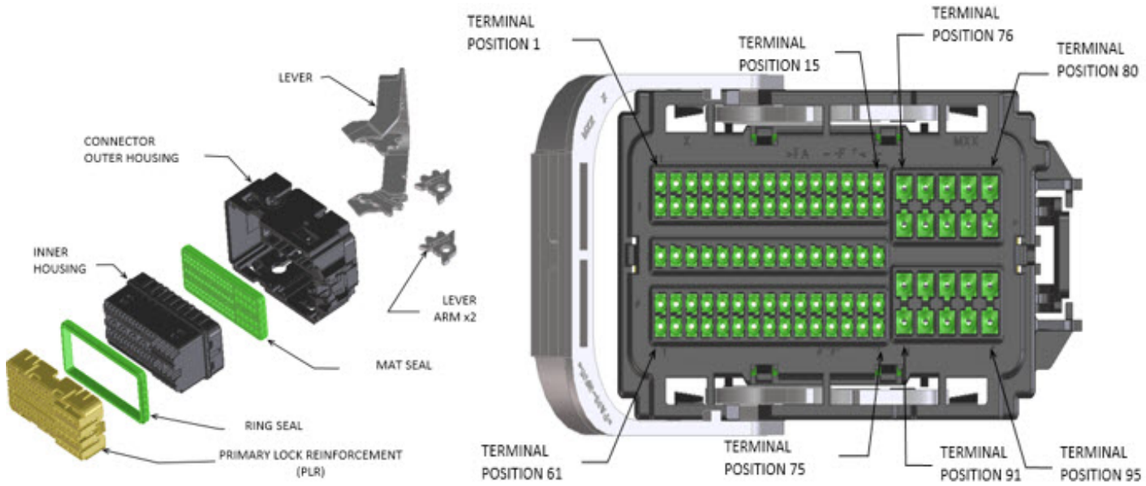

ABBREVIATION	DESCRIPTION	COLOR	MATERIAL
1-BLACK	OUTER HOUSING KEYING OPTION 1	BLACK	PA66 GF35
2-BLACK	OUTER HOUSING KEYING OPTION 2	BLACK	PA66 GF35
3-BLACK	OUTER HOUSING KEYING OPTION 3	BLACK	PA66 GF35
4-BLACK	OUTER HOUSING KEYING OPTION 4	BLACK	PA66 GF35
5-BLACK	OUTER HOUSING KEYING OPTION 5	BLACK	PA66 GF35
NIL - GRAY	OUTER HOUSING KEYING OPTION NIL	GRAY	PA66 GF35
IH	INNER HOUSING	BLACK	PA66 GF35
PLR	TPA/PLR	NATURAL	PA66 GF35
LE	LEVER - END LATCH	GRAY	PA66 GF35
LT	LEVER - TOP LATCH	GRAY	PA66 GF35
LA	LEVER ARM	GRAY	PA66 GF35
M	MAT SEAL	GREEN	INHERENTLY LUBRICATED SILICONE
R	RING SEAL	GREEN	INHERENTLY LUBRICATED SILICONE

FOR ADDITIONAL INFORMATION SEE 349920001-SD

LOOK AT 2032000001-SD FOR WIRE DRESS COVER OPTION

ASSEMBLY DESCRIPTION	ASSEMBLY PART NUMBER	COMPONENT THE PRESENCE OF AN ABBREVIATION INDICATES THE PRESENCE OF THAT COMPONENT.							BLOCKED TERMINALS CAVITY WITH A NUMBER INDICATES BLOCKED TERMINAL POSITION CAVITY WITHOUT A NUMBER INDICATES OPEN TERMINAL POSITION																				STATUS	COMMENTS
		OUTER HOUSING KEY/COLOR	INNER HOUSING	PLR	LEVER	LEVER ARM (x/2)	MAT SEAL	RING SEAL																					
GPEC RCPT CONN 95 CKT END LVR KEY 1/95	349920001	1-BLACK	IH	PLR	LE	LA	M	R	-	-	-	-	-	-	-	-	-	-	-	-	-	-	-	-	-	-	-	SALEABLE	
									-	-	-	-	-	-	-	-	-	-	-	-	-	-	-	-	-	-	-		
									-	-	-	-	-	-	-	-	-	-	-	-	-								
									-	-	-	-	-	-	-	-	-	-	-	-	-	-	-	-	-	-	-		
									-	-	-	-	-	-	-	-	-	-	-	-	-	-	-	-	-	-	-		
GPEC RCPT CONN 95 CKT END LVR KEY 1/0	349920002	1-BLACK	IH	PLR	LE	LA	M	R	1	2	3	4	5	6	7	8	9	10	11	12	13	14	15	76	77	78	79	80	SALEABLE	
									16	17	18	19	20	21	22	23	24	25	26	27	28	29	30	81	82	83	84	85		
									31	32	33	34	35	36	37	38	39	40	41	42	43	44	45							
									46	47	48	49	50	51	52	53	54	55	56	57	58	59	60	86	87	88	89	90		
									61	62	63	64	65	66	67	68	69	70	71	72	73	74	75	91	92	93	94	95		
GPEC RCPT CONN 95 CKT END LVR KEY 1/68	349920003	1-BLACK	IH	PLR	LE	LA	M	R	-	-	3	-	-	-	-	-	9	10	-	12	-	-	15	-	-	78	-	-	SALEABLE	
									-	-	18	-	-	-	-	-	24	25	-	-	-	-	30	-	-	83	-	-		
									-	-	-	-	-	-	-	-	-	-	-	-	-	-	45							
									-	47	48	-	-	-	-	-	-	-	56	-	-	-	-	-	87	88	-	-		
									-	-	-	64	65	-	-	68	69	70	71	72	73	74	75	-	-	-	-	-		
GPEC RCPT CONN 95 CKT END LVR KEY 1/67	349920004	1-BLACK	IH	PLR	LE	LA	M	R	-	-	3	-	-	-	-	-	9	10	-	12	-	-	15	-	-	78	-	-	SALEABLE	
									-	-	18	-	-	-	-	-	24	25	-	-	-	-	30	-	-	83	-	-		
									31	-	-	-	-	-	-	-	-	-	-	-	-	-	45							
									-	47	48	-	-	-	-	-	-	-	56	-	-	-	-	-	87	88	-	-		
									-	-	-	64	65	-	-	68	69	70	71	72	73	74	75	-	-	-	-	-		
GPEC RCPT CONN 95 CKT END LVR KEY 1/74	349920005	1-BLACK	IH	PLR	LE	LA	M	R	-	-	3	-	5	-	-	-	9	-	-	12	13	14	-	-	-	-	-	-	SALEABLE	
									-	-	18	-	-	-	-	-	24	-	-	-	-	-	-	-	-	83	-	-		
									31	-	-	-	-	-	-	-	-	-	-	-	-	-	-							
									46	47	48	-	-	-	-	-	-	-	56	-	-	-	-	-	87	88	-	-		
									61	-	-	64	-	-	-	-	69	70	71	-	-	-	-	-	-	-	-	-		
GPEC RCPT CONN 95 CKT END LVR KEY 1/65	349920006	1-BLACK	IH	PLR	LE	LA	M	R	-	-	3	-	5	-	-	-	9	-	-	12	13	14	15	-	-	78	-	-	SALEABLE	
									-	-	18	-	-	-	-	-	24	-	-	27	-	-	-	-	-	83	-	-		
									31	-	-	-	35	-	-	-	-	-	-	-	-	-	-							
									46	47	48	-	-	-	-	-	54	-	56	-	-	-	-	-	87	88	-	-		
									61	-	-	64	-	-	-	-	69	70	71	72	73	74	75	-	-	-	-	-		
GPEC RCPT CONN 95 CKT END LVR KEY 1/77	349920007	1-BLACK	IH	PLR	LE	LA	M	R	-	-	3	-	5	-	-	-	9	-	-	12	13	14	-	-	-	-	-	-	SALEABLE	
									-	-	18	-	-	-	-	-	24	-	-	-	-	-	-	-	-	83	-	-		
									31	-	-	-	-	-	-	-	-	-	-	-	-	-	-							
									46	-	-	-	-	-	-	-	-	-	-	-	-	-	-	-	87	88	-	-		
									61	-	-	64	-	-	-	-	69	70	71	-	-	-	-	-	-	-	-	-		

molex

GPEC IV 95 WAY RECEPTACLE SEALED ASSEMBLY MAT SEAL

BOM AND PIN OUT SHEET

ASSEMBLY DESCRIPTION	ASSEMBLY PART NUMBER	COMPONENT THE PRESENCE OF AN ABBREVIATION INDICATES THE PRESENCE OF THAT COMPONENT.							BLOCKED TERMINALS CAVITY WITH A NUMBER INDICATES BLOCKED TERMINAL POSITION CAVITY WITHOUT A NUMBER INDICATES OPEN TERMINAL POSITION																						STATUS	COMMENTS
		OUTER HOUSING KEY/COLOR	INNER HOUSING	PLR	LEVER	LEVER ARM (x/2)	MAT SEAL	RING SEAL																							
GPEC RCPT CONN 95 CKT END LVR KEY 1/75	349920008	1-BLACK	IH	PLR	LE	LA	M	R	1	-	3	-	5	-	7	-	-	10	-	-	-	-	15		-	-	78	-	-	SALEABLE	
									16	-	-	-	-	-	-	-	-	-	-	-	-	-	-		-	-	-	-	-		
									-	-	-	-	-	-	-	-	-	-	41	-	-	-	-								
									46	-	48	-	-	-	-	-	-	-	56	-	-	-	-		-	-	-	-	-		
									61	-	63	64	-	-	67	68	69	-	-	-	-	74	75		-	-	-	-	-		
GPEC RCPT CONN 95 CKT END LVR KEY 1/76	349920009	1-BLACK	IH	PLR	LE	LA	M	R	1	-	3	-	5	-	7	-	-	10	-	-	-	-	-		-	-	-	-	-	SALEABLE	
									16	-	-	-	-	-	-	-	-	-	-	-	-	-	-		-	-	-	-	-		
									-	-	-	-	-	-	-	-	-	-	41	-	-	-	-								
									46	-	48	-	-	-	-	-	-	-	56	-	-	-	-		-	-	-	-	-		
									61	-	63	64	-	66	67	68	69	-	-	-	-	74	75		-	-	-	-	-		
GPEC RCPT CONN 95 CKT END LVR KEY 1/80	349920010	1-BLACK	IH	PLR	LE	LA	M	R	1	-	3	-	5	-	7	-	-	10	-	-	-	-	-		-	-	-	-	-	SALEABLE	
									16	-	-	-	-	-	-	-	-	-	-	-	-	-	-		-	-	-	-	-		
									-	-	-	-	-	-	-	-	-	-	41	-	-	-	-								
									46	-	48	-	-	-	-	-	-	-	56	-	-	-	-		-	-	-	-	-		
									61	-	63	64	-	-	67	-	69	-	-	-	-	-	-		-	-	-	-	-		
GPEC RCPT CONN 95 CKT END LVR KEY 1/79	349920011	1-BLACK	IH	PLR	LE	LA	M	R	1	-	-	-	-	-	-	-	-	-	-	-	-	-	15		-	-	78	-	-	SALEABLE	
									16	-	-	-	-	-	22	-	-	-	-	-	-	-	-		-	-	83	-	-		
									-	-	-	-	-	-	-	-	-	-	-	-	-	-	-								
									-	-	-	-	-	-	-	-	-	55	56	-	-	-	-		-	-	-	-	-		
									-	62	63	64	-	-	67	68	69	-	-	-	-	74	75		-	-	-	-	-		
GPEC RCPT CONN 95 CKT END LVR KEY 1/74	349920012	1-BLACK	IH	PLR	LE	LA	M	R	-	-	3	-	-	-	-	-	9	10	-	12	-	-	-		-	-	-	-	-	SALEABLE	
									-	-	18	-	-	-	-	-	24	25	-	-	-	-	-		-	-	83	-	-		
									31	-	-	-	-	-	-	-	-	-	-	-	-	-	-								
									-	47	48	-	-	-	-	-	-	-	56	-	-	-	-		-	87	88	-	-		
									-	-	-	64	65	-	-	68	69	-	71	-	-	74	75		-	-	-	-	-		
GPEC RCPT CONN 95 CKT END LVR KEY 1/83	349920013	1-BLACK	IH	PLR	LE	LA	M	R	1	-	-	-	-	-	-	-	-	-	-	-	-	-	-		-	-	78	-	-	SALEABLE	
									16	-	-	-	-	-	-	-	-	-	-	-	-	-	-		-	-	83	-	-		
									-	-	-	-	-	-	-	-	-	-	-	-	-	-	-								
									-	-	-	-	-	-	-	-	-	55	56	-	-	-	-		-	-	-	-	-		
									-	62	63	64	-	-	67	68	69	-	-	-	-	-	-		-	-	-	-	-		
GPEC RCPT CONN 95 CKT END LVR KEY 1/79	349920014	1-BLACK	IH	PLR	LE	LA	M	R	-	-	-	-	-	-	-	-	9	-	-	-	-	-	-		-	-	-	-	-	SALEABLE	
									-	-	18	-	-	-	-	-	24	25	-	-	-	-	-		-	-	-	-	-		
									-	-	-	-	-	-	-	-	-	-	-	-	-	-	-								
									-	47	48	-	-	-	-	-	-	-	56	-	-	-	-		-	87	88	-	-		
									-	-	-	64	65	-	-	68	69	-	71	-	-	74	75		-	-	-	-	-		
GPEC RCPT CONN 95 CKT END LVR KEY 1/82	349920015	1-BLACK	IH	PLR	LE	LA	M	R	-	-	-	-	-	-	-	-	9	-	-	-	-	-	-		-	-	-	-	-	SALEABLE	
									-	-	18	-	-	-	-	-	24	25	-	-	-	-	-		-	-	-	-	-		
									-	-	-	-	-	-	-	-	-	-	-	-	-	-	-								
									-	-	-	-	-	-	-	-	-	-	-	-	-	-	-		-	87	88	-	-		
									-	-	-	64	65	-	-	68	69	-	71	-	-	74	75		-	-	-	-	-		
GPEC RCPT CONN 95 CKT END LVR KEY 1/77	349920016	1-BLACK	IH	PLR	LE	LA	M	R	1	-	-	-	-	-	-	-	-	-	-	-	-	-	15		-	-	78	-	-	SALEABLE	
									16	-	-	-	-	-	22	-	-	-	-	-	-	-	-		-	-	83	-	-		
									-	-	-	-	-	-	-	-	-	-	-	-	-	-	-								
									-	-	-	-	-	-	-	-	-	55	56	57	-	-	-		-	-	-	-	-		
									-	62	63	64	-	66	67	68	69	-	-	-	-	74	75		-	-	-	-	-		
GPEC RCPT CONN 95 CKT END LVR KEY 1/67	349920017	1-BLACK	IH	PLR	LE	LA	M	R	-	-	3	-	-	-	-	-	9	10	-	12	-	-	15		-	-	78	-	-	SALEABLE	
									-	-	18	-	-	-	-	-	24	25	-	-	-	-	30		-	-	83	-	-		
									31	-	-	-	-	-	-	-	-	-	-	-	-	-	45								
									-	-	-	-	-	-	-	-	-	-	-	-	-	-	-		86	87	88	-	-		
									-	62	63	64	65	-	-	68	69	70	71	72	73	74	75		-	-	-	-	-		

molex

GPEC IV 95 WAY RECEPTACLE SEALED ASSEMBLY MAT SEAL

BOM AND PIN OUT SHEET

ASSEMBLY DESCRIPTION	ASSEMBLY PART NUMBER	COMPONENT THE PRESENCE OF AN ABBREVIATION INDICATES THE PRESENCE OF THAT COMPONENT.							BLOCKED TERMINALS CAVITY WITH A NUMBER INDICATES BLOCKED TERMINAL POSITION CAVITY WITHOUT A NUMBER INDICATES OPEN TERMINAL POSITION																				STATUS	COMMENTS
		OUTER HOUSING KEY/COLOR	INNER HOUSING	PLR	LEVER	LEVER ARM (x/2)	MAT SEAL	RING SEAL																					
GPEC RCPT CONN 95 CKT END LVR KEY 1/79	349920018	1-BLACK	IH	PLR	LE	LA	M	R	-	-	-	-	-	-	-	-	9	-	-	-	-	-	-	-	-	-	SALEABLE	
									-	-	18	-	-	-	-	-	24	25	-	-	-	-	-	-	-	-		
									-	-	-	-	-	-	-	-	-	-	-	-	-	-						
									-	47	48	-	-	-	-	-	-	-	-	-	-	-	86	87	88	-	-	
									-	-	-	64	65	-	-	68	69	-	71	-	-	74	75	-	-	-	-	-	
GPEC RCPT CONN 95 CKT END LVR KEY 1/80	349920019	1-BLACK	IH	PLR	LE	LA	M	R	-	-	-	-	-	-	-	-	-	-	-	-	-	-	-	-	-	-	SALEABLE	
									-	-	-	-	-	-	-	-	-	-	-	-	-	-	-	-	-	-		
									-	-	-	-	-	-	-	-	-	-	-	-	-	-						
									-	-	-	-	-	-	-	-	-	-	-	-	-	-	-	-	-	-		
									61	62	63	64	65	66	67	68	69	70	71	72	73	74	75	-	-	-	-	-	
GPEC RCPT CONN 95 CKT END LVR KEY 1/47	349920020	1-BLACK	IH	PLR	LE	LA	M	R	-	-	3	4	-	-	-	-	9	-	-	12	13	-	15	-	77	78	79	80	
									16	17	18	-	20	21	-	23	24	25	26	-	28	-	30	-	-	-	-	85	
									-	-	-	-	-	-	-	38	-	-	-	-	43	44	45						
									46	47	48	49	-	51	-	53	54	-	56	-	-	59	-	86	-	-	-	-	
									61	-	-	-	-	66	67	68	69	70	71	-	73	74	-	91	-	-	94	95	
GPEC RCPT CONN 95 CKT END LVR KEY 1/67	349920021	1-BLACK	IH	PLR	LE	LA	M	R	-	-	-	-	-	-	-	-	-	-	-	-	-	-	-	-	-	-	-	-	SALEABLE	
									-	-	-	-	-	-	22	-	24	25	26	-	-	-	-	81	-	-	-	-	
									-	32	-	-	35	36	37	-	39	-	-	42	43	44	-						
									46	-	-	49	-	51	-	-	-	-	-	57	-	-	60	86	87	88	89	-	
									-	-	-	-	-	66	67	-	-	-	71	-	73	74	-	-	92	-	-	-	
GPEC RCPT CONN 95 CKT END LVR KEY 1/74	349920022	1-BLACK	IH	PLR	LE	LA	M	R	-	-	-	-	-	-	-	-	9	-	-	-	-	-	15	-	-	-	-	-	SALEABLE	
									-	-	18	-	-	-	-	-	24	25	-	-	-	-	30	-	-	-	-	-	
									-	-	-	-	-	-	-	-	-	-	-	-	-	-	45						
									-	47	48	-	-	-	-	-	-	-	56	-	-	-	-	-	87	88	-	-	
									-	-	-	64	65	-	-	68	69	70	-	72	73	74	75	-	-	-	-	-	
GPEC RCPT CONN 95 CKT END LVR KEY 1/77	349920023	1-BLACK	IH	PLR	LE	LA	M	R	-	-	-	-	-	-	-	-	9	-	-	-	-	-	15	-	-	-	-	-	SALEABLE	
									-	-	18	-	-	-	-	-	24	25	-	-	-	-	30	-	-	-	-	-	
									-	-	-	-	-	-	-	-	-	-	-	-	-	-	45						
									-	-	-	-	-	-	-	-	-	-	-	-	-	-	-	-	87	88	-	-	
									-	-	-	64	65	-	-	68	69	70	-	72	73	74	75	-	-	-	-	-	
GPEC RCPT CONN 95 CKT END LVR KEY 1/60	349920024	1-BLACK	IH	PLR	LE	LA	M	R	-	-	3	4	-	-	-	-	-	-	-	-	-	-	-	-	-	-	79	-	SALEABLE	
									-	-	-	19	20	-	22	-	24	25	26	-	-	-	-	81	-	-	-	-	
									31	32	-	34	35	36	37	-	39	-	-	42	43	44	-						
									46	-	-	49	-	51	-	-	-	-	-	57	-	-	-	86	87	88	-	-	
									-	-	-	-	-	66	67	-	69	70	71	-	73	74	-	-	92	-	-	-	
GPEC RCPT CONN 95 CKT END LVR KEY 1/67	349920025	1-BLACK	IH	PLR	LE	LA	M	R	-	-	-	-	-	-	-	-	-	-	-	-	-	-	-	-	-	-	-	-	SALEABLE	
									-	-	-	-	20	-	22	-	24	25	26	-	-	-	-	81	-	-	-	-	
									31	32	-	-	35	36	37	-	39	-	-	42	43	44	-						
									46	-	-	49	-	51	-	-	-	-	-	57	-	-	-	86	87	88	-	-	
									-	-	-	-	-	66	67	-	-	-	71	-	73	74	-	-	92	-	-	-	
GPEC RCPT CONN 95 CKT END LVR KEY 1/82	349920026	1-BLACK	IH	PLR	LE	LA	M	R	1	-	-	-	-	-	-	-	-	-	-	-	-	-	-	-	-	78	-	-	SALEABLE	
									16	-	-	-	-	-	22	-	-	-	-	-	-	-	-	-	-	83	-	-	
									-	-	-	-	-	-	-	-	-	-	-	-	-	-	-						
									-	-	-	-	-	-	-	-	-	55	56	-	-	-	-	-	-	-	-	-	
									-	62	63	64	-	-	67	68	69	-	-	-	-	-	-	-	-	-	-	-	
GPEC RCPT CONN 95 CKT END LVR KEY 1/68	349920027	1-BLACK	IH	PLR	LE	LA	M	R	-	-	3	-	-	-	-	-	9	10	-	12	-	-	15	-	-	-	-	-	SALEABLE	
									-	-	18	-	-	-	-	-	24	25	-	-	-	-	30	-	-	83	-	-	
									31	-	-	-	-	-	-	-	-	-	-	-	-	-	45						
									-	47	48	-	-	-	-	-	-	-	56	-	-	-	-	-	87	88	-	-	
									-	-	-	64	65	-	-	68	69	70	71	72	73	74	75	-	-	-	-	-	

molex

GPEC IV 95 WAY RECEPTACLE SEALED ASSEMBLY MAT SEAL

BOM AND PIN OUT SHEET

ASSEMBLY DESCRIPTION	ASSEMBLY PART NUMBER	COMPONENT THE PRESENCE OF AN ABBREVIATION INDICATES THE PRESENCE OF THAT COMPONENT.							BLOCKED TERMINALS CAVITY WITH A NUMBER INDICATES BLOCKED TERMINAL POSITION CAVITY WITHOUT A NUMBER INDICATES OPEN TERMINAL POSITION																				STATUS	COMMENTS
		OUTER HOUSING KEY/COLOR	INNER HOUSING	PLR	LEVER	LEVER ARM (x/2)	MAT SEAL	RING SEAL																					
GPEC RCPT CONN 95 CKT END LVR KEY 1/85	349920028	1-BLACK	IH	PLR	LE	LA	M	R	-	-	-	-	-	-	-	-	-	-	-	-	-	-	-	-	-	-	-	SALEABLE	
									-	-	-	-	-	-	22	-	24	-	-	-	-	-	-	-	-	-	-		
									-	-	-	-	-	-	-	-	39	-	-	42	43	44	-						
									-	-	-	-	-	-	-	-	-	-	-	-	-	-	-	-	-	-	-		
									-	-	-	-	-	66	67	-	-	-	-	-	73	74	-	-	-	-	-		
GPEC RCPT CONN 95 CKT END LVR KEY 1/68	349920029	1-BLACK	IH	PLR	LE	LA	M	R	-	-	3	-	-	-	-	-	9	10	-	12	-	-	15	-	-	78	-	-	SALEABLE	
									-	-	18	-	-	-	-	-	24	25	-	-	-	-	30	-	-	83	-	-		
									31	-	-	-	-	-	-	-	-	-	-	-	-	-	45						
									-	47	48	-	-	-	-	-	-	-	56	-	-	-	-	-	87	88	-	-		
									-	-	-	64	65	-	-	68	69	70	-	72	73	74	75	-	-	-	-	-		
GPEC RCPT CONN 95 CKT END LVR KEY 1/69	349920030	1-BLACK	IH	PLR	LE	LA	M	R	-	-	-	-	-	-	-	-	-	-	-	-	-	-	-	-	-	-	-	SALEABLE	
									-	-	-	-	20	-	22	-	24	25	26	-	-	-	-	81	-	-	-	-		
									31	32	-	-	35	36	37	-	39	-	-	42	43	44	-						
									46	-	-	49	-	51	-	-	-	-	-	57	-	-	-	86	87	88	-	-		
									-	-	-	-	-	66	67	-	-	-	-	-	73	74	-	-	-	-	-		
GPEC RCPT CONN 95 CKT END LVR KEY 1/83	349920031	1-BLACK	IH	PLR	LE	LA	M	R	-	-	-	-	-	-	-	-	-	-	-	-	-	-	-	-	-	-	-	SALEABLE	
									-	-	-	-	-	-	-	-	24	-	-	-	-	-	-	-	-	-	-		
									-	-	-	-	-	-	-	-	-	-	-	-	-	-	-						
									-	-	48	-	-	-	-	-	-	-	56	-	-	-	-	-	87	88	-	-		
									-	-	-	64	65	-	-	68	-	-	-	72	73	74	75	-	-	-	-	-		
GPEC RCPT CONN 95 CKT END LVR KEY 1/69	349920032	1-BLACK	IH	PLR	LE	LA	M	R	-	-	3	-	-	-	-	-	9	10	-	12	-	-	15	-	-	-	-	-	SALEABLE	
									-	-	18	-	-	-	-	-	24	25	-	-	-	-	30	-	-	83	-	-		
									31	-	-	-	-	-	-	-	-	-	-	-	-	-	45						
									-	47	48	-	-	-	-	-	-	-	56	-	-	-	-	-	87	88	-	-		
									-	-	-	64	65	-	-	68	69	70	-	72	73	74	75	-	-	-	-	-		
GPEC RCPT CONN 95 CKT END LVR KEY 1/72	349920033	1-BLACK	IH	PLR	LE	LA	M	R	-	-	-	-	-	-	-	-	9	10	-	12	-	-	15	-	-	78	-	-	SALEABLE	
									-	-	18	-	-	-	-	-	24	25	-	-	-	-	30	-	-	-	-	-		
									-	-	-	-	-	-	-	-	-	-	-	-	-	-	45						
									-	47	48	-	-	-	-	-	-	-	-	-	-	-	-	-	87	88	-	-		
									-	-	-	64	65	-	-	68	69	70	-	72	73	74	75	-	-	-	-	-		
GPEC RCPT CONN 95 CKT END LVR KEY 1/60	349920034	1-BLACK	IH	PLR	LE	LA	M	R	-	-	-	-	5	-	-	8	9	-	-	-	13	-	-	-	-	-	-	-	SALEABLE	
									-	-	-	19	20	-	22	23	24	25	26	-	28	-	-	81	-	-	-	-		
									31	32	-	34	35	36	37	-	39	-	-	42	43	44	-						
									46	-	-	49	-	51	52	-	-	-	-	57	-	-	-	86	87	88	-	-		
									-	-	-	-	-	-	-	-	69	70	-	-	73	74	-	-	-	-	-	-		
GPEC RCPT CONN 95 CKT END LVR KEY 1/70	349920035	1-BLACK	IH	PLR	LE	LA	M	R	-	-	-	-	-	-	-	-	-	-	-	-	-	-	-	-	-	-	-	SALEABLE	
									-	-	-	-	20	-	22	-	24	25	26	-	-	-	-	81	-	-	-	-		
									31	32	-	-	35	36	37	-	39	-	-	42	43	44	-						
									46	-	-	49	-	51	52	-	-	-	-	57	-	-	-	86	87	88	-	-		
									-	-	-	-	-	-	-	-	-	-	-	-	73	74	-	-	-	-	-	-		
GPEC RCPT CONN 95 CKT END LVR KEY 1/70	349920036	1-BLACK	IH	PLR	LE	LA	M	R	-	-	-	-	-	-	-	-	9	10	-	12	-	-	15	-	-	-	-	-	SALEABLE	
									-	-	18	-	-	-	-	-	24	25	-	-	-	-	30	-	-	83	-	-		
									31	-	-	-	-	-	-	-	-	-	-	-	-	-	45						
									-	47	48	-	-	-	-	-	-	-	56	-	-	-	-	-	87	88	-	-		
									-	-	-	64	65	-	-	68	69	70	-	72	73	74	75	-	-	-	-	-		
GPEC RCPT CONN 95 CKT END LVR KEY 1/94	349920037	1-BLACK	IH	PLR	LE	LA	M	R	-	-	-	-	-	-	-	-	-	-	-	-	-	-	-	-	-	-	-	SALEABLE	
									-	-	-	-	-	-	-	-	-	-	-	-	-	-	-	-	-	-	-		
									-	-	-	-	-	-	-	-	-	-	-	-	-	-	-						
									-	-	-	-	-	-	-	-	-	-	-	-	-	-	-	-	-	-	-		
									-	-	-	-	-	-	-	-	-	-	-	-	-	-	75	-	-	-	-	-		

molex

GPEC IV 95 WAY RECEPTACLE SEALED ASSEMBLY MAT SEAL

BOM AND PIN OUT SHEET

ASSEMBLY DESCRIPTION	ASSEMBLY PART NUMBER	COMPONENT THE PRESENCE OF AN ABBREVIATION INDICATES THE PRESENCE OF THAT COMPONENT.							BLOCKED TERMINALS CAVITY WITH A NUMBER INDICATES BLOCKED TERMINAL POSITION CAVITY WITHOUT A NUMBER INDICATES OPEN TERMINAL POSITION																					STATUS	COMMENTS
		OUTER HOUSING KEY/COLOR	INNER HOUSING	PLR	LEVER	LEVER ARM (x/2)	MAT SEAL	RING SEAL																						
GPEC RCPT CONN 95 CKT TOP LVR KEY 1/95	349921001	1-BLACK	IH	PLR	LT	LA	M	R	-	-	-	-	-	-	-	-	-	-	-	-	-	-	-	-	-	-	-	-	SALEABLE	
									-	-	-	-	-	-	-	-	-	-	-	-	-	-	-	-	-	-	-	-		
									-	-	-	-	-	-	-	-	-	-	-	-	-	-	-	-	-	-	-	-		
									-	-	-	-	-	-	-	-	-	-	-	-	-	-	-	-	-	-	-	-		
									-	-	-	-	-	-	-	-	-	-	-	-	-	-	-	-	-	-	-	-		
GPEC RCPT CONN 95 CKT TOP LVR KEY 1/0	349921002	1-BLACK	IH	PLR	LT	LA	M	R	1	2	3	4	5	6	7	8	9	10	11	12	13	14	15	76	77	78	79	80	SALEABLE	
									16	17	18	19	20	21	22	23	24	25	26	27	28	29	30	81	82	83	84	85		
									31	32	33	34	35	36	37	38	39	40	41	42	43	44	45							
									46	47	48	49	50	51	52	53	54	55	56	57	58	59	60	86	87	88	89	90		
									61	62	63	64	65	66	67	68	69	70	71	72	73	74	75	91	92	93	94	95		
GPEC RCPT CONN 95 CKT TOP LVR KEY 1/47	349921003	1-BLACK	IH	PLR	LT	LA	M	R	-	-	3	4	5	-	-	-	9	-	-	12	13	-	15	-	77	78	79	80	SALEABLE	
									16	17	18	-	20	21	-	23	24	25	26	-	28	-	30	-	-	-	-	85		
									-	-	-	-	-	-	-	38	-	-	-	-	43	44	45							
									46	47	-	49	-	51	-	53	54	-	56	-	-	59	-	86	-	-	-	-		
									61	-	-	-	-	66	67	68	69	70	71	-	73	74	-	91	-	-	94	95		
GPEC RCPT CONN 95 CKT TOP LVR KEY 1/77	349921004	1-BLACK	IH	PLR	LT	LA	M	R	-	-	-	-	-	-	-	-	9	-	-	-	-	-	15	-	-	-	-	-	SALEABLE	
									-	-	18	-	-	-	-	-	24	25	-	-	-	-	30	-	-	-	-	-		
									-	-	-	-	-	-	-	-	-	-	-	-	-	-	45							
									-	-	-	-	-	-	-	-	-	-	-	-	-	-	-	-	87	88	-	-		
									-	-	-	64	65	-	-	68	69	70	-	72	73	74	75	-	-	-	-	-		
GPEC RCPT CONN 95 CKT TOP LVR KEY 1/68	349921005	1-BLACK	IH	PLR	LT	LA	M	R	-	-	3	-	-	-	-	-	9	10	-	12	-	-	15	-	-	78	-	-	SALEABLE	
									-	-	18	-	-	-	-	-	24	25	-	-	-	-	30	-	-	83	-	-		
									31	-	-	-	-	-	-	-	-	-	-	-	-	-	45							
									-	47	48	-	-	-	-	-	-	-	56	-	-	-	-	-	87	88	-	-		
									-	-	-	64	65	-	-	68	69	70	-	72	73	74	75	-	-	-	-	-		
GPEC RCPT CONN 95 CKT TOP LVR KEY 1/65	349921006	1-BLACK	IH	PLR	LT	LA	M	R	-	-	3	-	-	-	-	-	9	10	-	12	-	-	15	-	-	78	-	-	SALEABLE	
									-	-	18	-	-	-	-	-	24	25	-	-	-	-	30	-	-	83	-	-		
									31	-	-	-	-	-	-	-	-	-	-	-	-	-	45							
									46	47	48	-	-	-	-	-	-	-	56	-	-	-	-	-	87	88	-	-		
									61	-	-	64	65	-	-	68	69	70	71	72	73	74	75	-	-	-	-	-		
GPEC RCPT CONN 95 CKT TOP LVR KEY 1/68	349921007	1-BLACK	IH	PLR	LT	LA	M	R	-	-	3	-	-	-	-	-	9	10	-	12	-	-	15	-	-	78	-	-	SALEABLE	
									-	-	18	-	-	-	-	-	24	-	-	-	-	-	-	-	-	83	-	-		
									31	-	-	-	-	-	-	-	-	-	-	-	-	-	-							
									46	47	48	-	-	-	-	-	-	-	56	-	-	-	-	-	87	88	-	-		
									61	-	-	64	65	-	-	68	69	70	71	72	73	74	75	-	-	-	-	-		
GPEC RCPT CONN 95 CKT TOP LVR KEY 1/94	349921008	1-BLACK	IH	PLR	LT	LA	M	R	-	-	-	-	-	-	-	-	-	-	-	-	-	-	-	-	-	-	-	-	SALEABLE	
									-	-	-	-	-	-	-	-	-	-	-	-	-	-	-	-	-	-	-	-		
									-	-	-	-	-	-	-	-	-	-	-	-	-	-	-							
									-	-	-	-	-	-	-	-	-	-	-	-	-	-	-	-	-	-	-	-		
									-	-	-	-	-	-	-	-	-	-	-	-	-	-	75	-	-	-	-	-		
GPEC RCPT CONN 95 CKT TOP LVR KEY 1/65	349921009	1-BLACK	IH	PLR	LT	LA	M	R	-	-	3	-	5	-	-	8	9	-	-	-	13	-	-	-	-	-	-	-	SALEABLE	
									-	-	-	19	20	-	22	-	24	25	26	-	28	-	-	-	-	-	-	-		
									31	32	-	34	35	36	37	-	-	-	-	-	-	-	-							
									46	-	-	49	-	51	52	-	-	-	-	57	-	-	-	86	-	88	-	-		
									-	-	-	-	-	-	-	-	69	70	-	-	-	74	-	-	-	-	94	95		
GPEC RCPT CONN 95 CKT END LVR KEY 2/95	349922001	2-BLACK	IH	PLR	LE	LA	M	R	-	-	-	-	-	-	-	-	-	-	-	-	-	-	-	-	-	-	-	-	SALEABLE	
									-	-	-	-	-	-	-	-	-	-	-	-	-	-	-	-	-	-	-	-		
									-	-	-	-	-	-	-	-	-	-	-	-	-	-	-							
									-	-	-	-	-	-	-	-	-	-	-	-	-	-	-	-	-	-	-	-		
									-	-	-	-	-	-	-	-	-	-	-	-	-	-	-	-	-	-	-	-		

molex

GPEC IV 95 WAY RECEPTACLE SEALED ASSEMBLY MAT SEAL

BOM AND PIN OUT SHEET

ASSEMBLY DESCRIPTION	ASSEMBLY PART NUMBER	COMPONENT THE PRESENCE OF AN ABBREVIATION INDICATES THE PRESENCE OF THAT COMPONENT.							BLOCKED TERMINALS CAVITY WITH A NUMBER INDICATES BLOCKED TERMINAL POSITION CAVITY WITHOUT A NUMBER INDICATES OPEN TERMINAL POSITION																				STATUS	COMMENTS
		OUTER HOUSING KEY/COLOR	INNER HOUSING	PLR	LEVER	LEVER ARM (x/2)	MAT SEAL	RING SEAL																					
GPEC RCPT CONN 95 CKT TOP LVR KEY 2/95	349923001	2-BLACK	IH	PLR	LT	LA	M	R	-	-	-	-	-	-	-	-	-	-	-	-	-	-	-	-	-	-	-	SALEABLE	
									-	-	-	-	-	-	-	-	-	-	-	-	-	-	-	-	-	-	-		
									-	-	-	-	-	-	-	-	-	-	-	-	-								
									-	-	-	-	-	-	-	-	-	-	-	-	-	-	-	-	-	-	-		
									-	-	-	-	-	-	-	-	-	-	-	-	-	-	-	-	-	-	-		
GPEC RCPT CONN 95 CKT TOP LVR KEY 2/46	349923002	2-BLACK	IH	PLR	LT	LA	M	R	-	-	-	4	-	6	-	8	9	-	11	-	-	14	15	-	77	-	-	80	SALEABLE	
									-	17	-	-	-	21	-	-	24	-	-	-	28	29	30	81	-	83	-	85		
									-	32	-	-	-	-	-	-	-	-	41	-	43	44	45							
									46	-	48	-	-	-	-	53	-	-	56	57	58	-	-	86	87	88	-	90		
									61	62	63	64	65	66	67	68	69	70	71	72	73	74	75	-	-	-	-	95		
GPEC RCPT CONN 95 CKT END LVR KEY 3/95	349924001	3-BLACK	IH	PLR	LE	LA	M	R	-	-	-	-	-	-	-	-	-	-	-	-	-	-	-	-	-	-	-	SALEABLE	
									-	-	-	-	-	-	-	-	-	-	-	-	-	-	-	-	-	-	-		
									-	-	-	-	-	-	-	-	-	-	-	-	-	-	-						
									-	-	-	-	-	-	-	-	-	-	-	-	-	-	-	-	-	-	-		
									-	-	-	-	-	-	-	-	-	-	-	-	-	-	-	-	-	-	-		
GPEC RCPT CONN 95 CKT END LVR KEY 3/61	349924002	3-BLACK	IH	PLR	LE	LA	M	R	-	-	-	-	-	-	-	-	-	-	-	-	-	-	-	-	-	-	-	SALEABLE	
									-	-	-	-	-	21	-	23	-	25	26	-	-	-	-	-	-	-	-	-		
									-	32	33	-	-	-	-	-	39	-	41	-	-	-	-							
									-	-	48	49	50	51	52	-	-	-	-	-	58	-	60	-	-	88	89	-		
									61	62	63	64	65	66	67	68	69	70	71	72	73	74	75	-	-	93	94	-		
GPEC RCPT CONN 95 CKT END LVR KEY 3/49	349924003	3-BLACK	IH	PLR	LE	LA	M	R	-	-	-	4	-	-	-	-	-	-	-	-	-	-	-	-	-	-	-	SALEABLE	
									-	-	-	19	-	21	-	23	24	25	26	-	-	-	-	-	-	-	-	-		
									-	32	33	-	35	-	37	-	39	-	41	-	43	44	-							
									-	-	48	49	50	51	52	53	-	55	56	-	58	-	60	-	87	88	89	-		
									61	62	63	64	65	66	67	68	69	70	71	72	73	74	75	-	92	93	94	-		
GPEC RCPT CONN 95 CKT END LVR KEY 3/53	349924004	3-BLACK	IH	PLR	LE	LA	M	R	-	-	-	-	-	-	-	-	-	-	-	-	-	-	-	-	-	-	-	SALEABLE	
									-	-	-	19	-	21	-	23	24	25	26	-	-	-	-	-	-	-	-	-		
									-	32	33	-	35	-	-	-	39	-	41	-	43	44	-							
									-	-	48	49	50	51	52	53	-	55	56	-	58	-	60	-	-	88	89	-		
									61	62	63	64	65	66	67	68	69	70	71	72	73	74	75	-	-	93	94	-		
GPEC RCPT CONN 95 CKT END LVR KEY 3/18	349924005	3-BLACK	IH	PLR	LE	LA	M	R	1	2	3	4	5	6	7	8	9	10	11	12	13	14	15	76	-	-	-	-	SALEABLE	
									16	17	18	19	20	21	22	23	24	25	26	27	28	29	30	81	-	-	-	-		
									31	32	33	34	35	36	37	38	39	40	41	42	43	44	45							
									46	47	48	49	50	-	-	53	54	55	56	57	58	59	60	86	-	-	-	-		
									61	62	63	64	65	66	67	68	69	70	71	72	73	74	75	91	-	-	-	-		
GPEC RCPT CONN 95 CKT END LVR KEY 3/58	349924006	3-BLACK	IH	PLR	LE	LA	M	R	-	-	-	-	-	-	-	-	-	-	-	-	-	-	-	-	-	-	-	SALEABLE	
									-	-	-	19	-	-	-	-	-	25	-	-	-	-	-	-	-	-	-	-		
									-	32	33	-	-	-	-	-	39	-	41	-	43	-	-							
									-	-	48	49	50	51	52	53	-	55	56	-	58	59	60	-	87	88	89	-		
									61	62	63	64	65	66	67	68	69	70	71	72	73	74	75	-	92	-	-	-		
GPEC RCPT CONN 95 CKT END LVR KEY 3/57	349924007	3-BLACK	IH	PLR	LE	LA	M	R	-	-	-	-	-	-	-	-	-	-	-	-	-	-	-	-	-	-	-	SALEABLE	
									-	-	-	19	-	-	-	-	-	25	-	-	-	-	-	-	-	-	-	-		
									-	32	33	-	35	-	-	-	39	-	41	-	43	-	-							
									-	-	48	49	50	51	52	53	-	55	56	-	58	59	60	-	87	88	89	-		
									61	62	63	64	65	66	67	68	69	70	71	72	73	74	75	-	92	-	-	-		
GPEC RCPT CONN 95 CKT END LVR KEY 3/49	349924008	3-BLACK	IH	PLR	LE	LA	M	R	-	-	-	-	-	-	-	-	-	-	-	-	-	-	-	76	77	78	79	80	SALEABLE	
									-	-	-	19	-	21	-	23	24	25	-	-	-	-	-	-	-	83	84	85		
									31	32	33	-	-	36	-	-	39	-	-	-	43	44	-							
									-	-	-	-	-	51	52	53	-	-	56	-	58	59	60	-	-	88	89	90		
									61	62	63	64	65	66	67	68	69	70	71	72	73	74	75	-	-	-	-	95		

molex

GPEC IV 95 WAY RECEPTACLE SEALED ASSEMBLY MAT SEAL

BOM AND PIN OUT SHEET

ASSEMBLY DESCRIPTION	ASSEMBLY PART NUMBER	COMPONENT THE PRESENCE OF AN ABBREVIATION INDICATES THE PRESENCE OF THAT COMPONENT.							BLOCKED TERMINALS CAVITY WITH A NUMBER INDICATES BLOCKED TERMINAL POSITION CAVITY WITHOUT A NUMBER INDICATES OPEN TERMINAL POSITION																						STATUS	COMMENTS
		OUTER HOUSING KEY/COLOR	INNER HOUSING	PLR	LEVER	LEVER ARM (x/2)	MAT SEAL	RING SEAL																							
GPEC RCPT CONN 95 CKT END LVR KEY 3/0	349924009	3-BLACK	IH	PLR	LE	LA	M	R	1	2	3	4	5	6	7	8	9	10	11	12	13	14	15		76	77	78	79	80	SALEABLE	
									16	17	18	19	20	21	22	23	24	25	26	27	28	29	30		81	82	83	84	85		
									31	32	33	34	35	36	37	38	39	40	41	42	43	44	45								
									46	47	48	49	50	51	52	53	54	55	56	57	58	59	60		86	87	88	89	90		
									61	62	63	64	65	66	67	68	69	70	71	72	73	74	75		91	92	93	94	95		
GPEC RCPT CONN 95 CKT END LVR KEY 3/57	349924010	3-BLACK	IH	PLR	LE	LA	M	R	-	-	-	-	-	-	-	-	-	10	-	-	-	-	-		-	-	-	-	-	SALEABLE	
									-	-	-	19	-	21	-	-	24	-	-	-	-	-	-		-	-	-	-	-		
									-	32	33	-	35	-	-	-	39	-	-	42	43	44	45								
									-	-	-	-	50	51	52	53	-	55	56	-	58	59	60		-	-	88	89	-		
									61	62	63	64	65	66	67	68	69	70	71	72	73	74	75		-	-	-	-	-		
GPEC RCPT CONN 95 CKT END LVR KEY 3/80	349924011	3-BLACK	IH	PLR	LE	LA	M	R	-	-	-	-	-	-	-	-	-	-	-	-	-	-	-		-	-	-	-	-	SALEABLE	
									-	-	-	-	-	-	-	-	-	-	-	-	-	-	-		-	-	-	-	-		
									-	-	-	-	-	-	-	-	-	-	-	-	-	-	-								
									-	-	-	-	-	-	-	-	-	-	-	-	-	-	-		-	-	-	-	-		
									61	62	63	64	65	66	67	68	69	70	71	72	73	74	75		-	-	-	-	-		
GPEC RCPT CONN 95 CKT END LVR KEY 3/46	349924012	3-BLACK	IH	PLR	LE	LA	M	R	-	-	-	-	-	-	-	-	-	-	-	-	-	-	-		76	77	78	79	80	SALEABLE	
									-	-	-	-	-	21	-	23	24	25	-	-	-	-	-		-	-	83	84	85		
									31	32	33	-	-	36	37	-	39	-	-	-	43	44	-								
									-	-	-	-	50	51	52	53	54	55	56	57	58	-	60		-	-	88	89	90		
									61	62	63	64	65	66	67	68	69	70	71	72	73	74	75		-	-	-	-	95		
GPEC RCPT CONN 95 CKT TOP LVR KEY 3/95	349925001	3-BLACK	IH	PLR	LT	LA	M	R	-	-	-	-	-	-	-	-	-	-	-	-	-	-	-		-	-	-	-	-	SALEABLE	
									-	-	-	-	-	-	-	-	-	-	-	-	-	-	-		-	-	-	-	-		
									-	-	-	-	-	-	-	-	-	-	-	-	-	-	-								
									-	-	-	-	-	-	-	-	-	-	-	-	-	-	-		-	-	-	-	-		
									-	-	-	-	-	-	-	-	-	-	-	-	-	-	-		-	-	-	-	-		
GPEC RCPT CONN 95 CKT TOP LVR KEY 3/80	349925002	3-BLACK	IH	PLR	LT	LA	M	R	-	-	-	-	-	-	-	-	-	-	-	-	-	-	-		-	-	-	-	-	SALEABLE	
									-	-	-	-	-	-	-	-	-	-	-	-	-	-	-		-	-	-	-	-		
									-	-	-	-	-	-	-	-	-	-	-	-	-	-	-								
									-	-	-	-	-	-	-	-	-	-	-	-	-	-	-		-	-	-	-	-		
									61	62	63	64	65	66	67	68	69	70	71	72	73	74	75		-	-	-	-	-		
GPEC RCPT CONN 95 CKT TOP LVR KEY 3/69	349925003	3-BLACK	IH	PLR	LT	LA	M	R	-	-	-	4	5	-	-	8	-	-	-	-	-	14	15		-	77	-	79	-	SALEABLE	
									-	17	-	19	-	-	-	23	-	25	26	-	28	-	30		-	-	-	-	-		
									-	-	-	-	-	-	-	-	-	-	-	-	-	-	-								
									46	-	-	49	-	-	-	-	-	-	56	-	58	59	-		-	-	-	-	-		
									-	-	-	64	-	-	67	-	69	-	-	-	73	-	75		91	92	-	-	-		
GPEC RCPT CONN 95 CKT TOP LVR KEY 3/69	349925004	3-BLACK	IH	PLR	LT	LA	M	R	-	-	-	4	5	-	-	8	-	-	-	-	-	14	15		-	77	-	79	-	SALEABLE	
									-	17	-	19	-	-	-	23	-	25	26	-	28	-	-		-	-	-	-	-		
									-	-	-	-	-	-	-	-	-	-	-	-	-	-	-								
									46	-	-	49	-	-	-	-	-	-	56	57	58	59	-		-	-	-	-	-		
									-	-	-	64	-	-	67	-	69	-	-	-	73	-	75		91	92	-	-	-		
GPEC RCPT CONN 95 CKT TOP LVR KEY 3/68	349925005	3-BLACK	IH	PLR	LT	LA	M	R	-	-	-	4	5	-	-	8	-	-	-	-	-	14	15		-	77	-	79	-	SALEABLE	
									-	17	-	19	-	-	-	23	-	25	26	-	28	-	30		-	-	-	-	-		
									-	-	-	-	-	-	-	-	-	-	-	-	-	-	-								
									46	-	-	49	-	-	-	-	-	-	56	57	58	59	-		-	-	-	-	-		
									-	-	-	64	-	-	67	-	69	-	-	-	73	-	75		91	92	-	-	-		
GPEC RCPT CONN 95 CKT TOP LVR KEY 3/49	349925006	3-BLACK	IH	PLR	LT	LA	M	R	-	-	-	4	5	-	-	8	-	-	-	-	-	14	15		-	77	78	79	-	SALEABLE	
									16	17	18	19	20	21	22	23	-	25	26	-	28	29	30		81	-	-	-	-		
									-	-	-	-	-	-	-	-	-	40	-	-	-	-	-								
									46	-	48	49	-	51	-	-	54	55	56	57	58	59	-		86	-	-	-	-		
									61	-	-	64	-	66	67	68	69	70	71	72	-	-	75		91	92	-	-	-		

molex

GPEC IV 95 WAY RECEPTACLE SEALED ASSEMBLY MAT SEAL

BOM AND PIN OUT SHEET

ASSEMBLY DESCRIPTION	ASSEMBLY PART NUMBER	COMPONENT THE PRESENCE OF AN ABBREVIATION INDICATES THE PRESENCE OF THAT COMPONENT.							BLOCKED TERMINALS CAVITY WITH A NUMBER INDICATES BLOCKED TERMINAL POSITION CAVITY WITHOUT A NUMBER INDICATES OPEN TERMINAL POSITION																			STATUS	COMMENTS
		OUTER HOUSING KEY/COLOR	INNER HOUSING	PLR	LEVER	LEVER ARM (x/2)	MAT SEAL	RING SEAL																				
GPEC RCPT CONN 95 CKT TOP LVR KEY 3/47	349925007	3-BLACK	IH	PLR	LT	LA	M	R	-	-	3	4	5	-	-	8	-	-	-	-	-	14	15	76	77	78	79	-	SALEABLE	
									16	17	18	19	20	21	22	23	-	25	26	-	28	29	30	81	-	-	-	-		
									-	-	-	-	-	-	-	-	-	40	-	-	-	-	-							
									46	47	48	49	-	51	-	-	54	55	56	57	-	59	-	86	-	-	-	-		
									61	-	-	-	-	66	67	68	-	70	-	72	73	74	75	91	92	93	-	-		
GPEC RCPT CONN 95 CKT TOP LVR KEY 3/57	349925008	3-BLACK	IH	PLR	LT	LA	M	R	-	-	-	-	-	-	-	-	-	-	-	-	-	-	-	-	-	-	-	-	SALEABLE	
									-	-	-	-	-	21	-	23	-	25	26	-	-	-	-	-	-	-	-	-		
									-	32	33	-	-	-	-	-	39	-	41	-	43	44	-							
									-	-	48	49	50	51	52	-	-	55	56	-	58	-	60	-	-	88	89	-		
									61	62	63	64	65	66	67	68	69	70	71	72	73	74	75	-	-	93	94	-		
GPEC RCPT CONN 95 CKT TOP LVR KEY 3/53	349925009	3-BLACK	IH	PLR	LT	LA	M	R	-	-	-	4	-	-	-	-	-	-	-	-	-	-	-	-	-	-	-	-	SALEABLE	
									-	-	-	-	-	21	-	23	-	25	26	-	-	-	-	-	-	-	-	-		
									-	32	33	-	-	-	37	-	39	-	41	-	43	44	-							
									-	-	48	49	50	51	52	-	-	55	56	-	58	-	60	-	87	88	89	-		
									61	62	63	64	65	66	67	68	69	70	71	72	73	74	75	-	92	93	94	-		
GPEC RCPT CONN 95 CKT TOP LVR KEY 3/44	349925010	3-BLACK	IH	PLR	LT	LA	M	R	-	-	-	4	5	-	7	8	-	-	-	12	13	14	15	-	77	78	79	-	SALEABLE	
									16	17	18	19	20	21	-	23	24	25	26	-	28	29	30	81	-	-	-	-		
									-	-	-	-	-	-	-	-	-	-	-	-	-	-	-							
									46	47	-	49	-	51	52	53	54	55	56	57	58	59	60	86	-	-	-	-		
									61	-	-	-	-	66	67	68	69	70	71	-	73	74	75	91	92	-	-	-		
GPEC RCPT CONN 95 CKT TOP LVR KEY 3/50	349925011	3-BLACK	IH	PLR	LT	LA	M	R	-	-	-	4	5	-	-	8	-	-	-	-	-	14	15	-	77	78	79	-	SALEABLE	
									16	17	18	19	20	21	22	23	-	25	26	-	28	29	30	81	-	-	-	-		
									-	-	-	-	-	-	-	-	-	40	-	-	-	-	-							
									46	-	48	-	-	51	-	-	54	55	56	57	58	59	-	86	-	-	-	-		
									61	-	-	64	-	66	67	68	69	70	71	72	-	-	75	91	92	-	-	-		
GPEC RCPT CONN 95 CKT TOP LVR KEY 3/45	349925012	3-BLACK	IH	PLR	LT	LA	M	R	-	2	-	4	-	-	7	8	-	-	-	12	13	14	15	-	77	78	79	-	SALEABLE	
									16	17	18	-	20	21	22	23	-	25	26	-	28	29	30	81	-	-	-	-		
									-	-	-	-	-	-	-	-	-	-	-	42	-	-	-							
									46	-	48	49	-	51	52	53	54	55	56	57	58	59	60	86	-	-	-	-		
									61	-	-	-	-	66	67	68	69	70	71	72	-	74	-	91	92	-	-	-		
GPEC RCPT CONN 95 CKT TOP LVR KEY 3/43	349925013	3-BLACK	IH	PLR	LT	LA	M	R	-	2	-	4	-	-	7	8	-	-	-	12	13	14	15	-	77	78	79	-	SALEABLE	
									16	17	18	-	20	21	22	23	-	25	26	-	28	29	30	81	-	-	-	-		
									-	-	-	-	-	-	-	-	-	40	-	42	-	-	-							
									46	47	48	49	-	51	52	53	54	55	56	57	58	59	60	86	-	-	-	-		
									61	-	-	-	-	66	67	68	69	70	71	72	-	74	-	91	92	-	-	-		
GPEC RCPT CONN 95 CKT TOP LVR KEY 3/42	349925014	3-BLACK	IH	PLR	LT	LA	M	R	-	-	-	-	-	6	-	-	-	-	11	12	-	-	15	-	-	-	-	-	SALEABLE	
									-	-	-	-	-	21	22	23	-	25	-	27	-	29	-	-	-	-	-	-		
									31	32	33	34	35	-	37	-	39	-	41	-	43	44	45							
									46	47	48	-	50	51	-	53	54	55	56	57	58	-	-	-	87	88	89	-		
									61	62	63	64	65	66	67	68	69	70	71	72	73	74	75	-	92	93	94	-		
GPEC RCPT CONN 95 CKT TOP LVR KEY 3/42	349925015	3-BLACK	IH	PLR	LT	LA	M	R	1	-	-	4	5	-	-	-	-	10	-	-	-	-	-	-	-	-	-	-	SALEABLE	
									-	17	-	19	-	21	-	23	24	25	-	-	-	-	-	-	-	-	-	-		
									31	32	33	-	35	-	37	-	39	-	41	42	43	44	45							
									-	-	48	49	50	51	52	53	-	55	56	-	58	59	60	-	87	88	89	-		
									61	62	63	64	65	66	67	68	69	70	71	72	73	74	75	-	92	93	94	-		
GPEC RCPT CONN 95 CKT TOP LVR KEY 3/51	349925016	3-BLACK	IH	PLR	LT	LA	M	R	-	-	-	4	5	-	-	-	-	-	-	-	-	-	-	-	-	-	-	-	SALEABLE	
									-	-	-	-	-	21	-	23	24	25	26	27	-	29	-	81	82	-	-	-		
									-	32	33	-	35	-	37	-	-	-	-	-	43	44	-							
									-	-	-	-	50	-	52	53	54	55	-	-	58	59	60	-	-	88	89	-		
									61	62	63	64	65	66	67	68	69	70	71	72	73	74	75	-	-	93	94	-		

molex

GPEC IV 95 WAY RECEPTACLE SEALED ASSEMBLY MAT SEAL

BOM AND PIN OUT SHEET

ASSEMBLY DESCRIPTION	ASSEMBLY PART NUMBER	COMPONENT THE PRESENCE OF AN ABBREVIATION INDICATES THE PRESENCE OF THAT COMPONENT.							BLOCKED TERMINALS CAVITY WITH A NUMBER INDICATES BLOCKED TERMINAL POSITION CAVITY WITHOUT A NUMBER INDICATES OPEN TERMINAL POSITION																					STATUS	COMMENTS
		OUTER HOUSING KEY/COLOR	INNER HOUSING	PLR	LEVER	LEVER ARM (x/2)	MAT SEAL	RING SEAL																						
GPEC RCPT CONN 95 CKT TOP LVR KEY 3/47	349925017	3-BLACK	IH	PLR	LT	LA	M	R	-	-	-	4	-	-	-	-	-	10	-	-	-	-	-	-	-	-	-	-	SALEABLE	
									-	17	-	19	-	21	-	23	24	25	-	-	-	-	-	-	-	-	-	-		
									-	32	33	-	35	-	37	-	39	-	-	-	43	44	45							
									-	-	48	49	50	51	52	53	-	55	56	-	58	59	60	-	87	88	89	-		
									61	62	63	64	65	66	67	68	69	70	71	72	73	74	75	-	92	93	94	-		
GPEC RCPT CONN 95 CKT TOP LVR KEY 3/45	349925018	3-BLACK	IH	PLR	LT	LA	M	R	-	-	3	4	5	-	-	8	-	-	-	-	-	14	15	-	77	78	79	-	SALEABLE	
									16	17	18	19	20	21	22	23	-	25	26	-	28	29	30	81	-	-	-	-		
									-	-	-	-	-	-	-	-	-	40	-	-	-	-	-							
									46	-	48	49	-	51	52	-	-	55	56	57	-	59	60	86	-	-	-	-		
									61	-	-	64	-	66	67	68	69	70	71	72	73	74	75	91	92	93	-	-		
GPEC RCPT CONN 95 CKT TOP LVR KEY 3/56	349925019	3-BLACK	IH	PLR	LT	LA	M	R	-	-	-	-	-	-	-	-	-	-	-	-	-	-	-	-	-	-	-	-	SALEABLE	
									-	-	-	19	-	21	-	-	24	25	-	-	-	-	-	-	-	-	-	-		
									31	-	33	-	35	-	-	-	39	-	41	-	43	44	-							
									-	-	48	49	50	51	52	53	-	55	-	-	58	59	60	-	-	88	-	-		
									61	62	63	64	65	66	67	68	69	70	71	72	73	74	75	-	-	93	94	-		
GPEC RCPT CONN 95 CKT TOP LVR KEY 3/56	349925020	3-BLACK	IH	PLR	LT	LA	M	R	-	-	-	-	-	-	-	-	-	-	-	-	-	-	-	-	-	-	-	-	SALEABLE	
									-	-	-	19	-	21	-	-	24	25	-	-	-	-	-	-	-	-	-	-		
									31	-	33	-	-	-	-	-	39	-	41	-	43	44	-							
									-	-	48	49	50	51	52	53	-	55	-	-	58	59	60	-	-	88	89	-		
									61	62	63	64	65	66	67	68	69	70	71	72	73	74	75	-	-	93	94	-		
GPEC RCPT CONN 95 CKT TOP LVR KEY 3/42	349925021	3-BLACK	IH	PLR	LT	LA	M	R	-	-	3	4	-	-	-	8	-	-	-	12	13	14	15	-	77	78	79	80	SALEABLE	
									16	17	18	19	20	21	22	23	24	25	26	-	28	29	30	-	-	-	-	-		
									-	-	-	-	-	-	-	-	-	40	-	42	-	44	-							
									46	47	48	-	-	51	52	53	54	-	-	57	-	59	-	-	-	-	-	-		
									61	-	-	64	-	66	67	68	69	70	71	72	73	74	75	91	92	93	-	95		
GPEC RCPT CONN 95 CKT TOP LVR KEY 3/42	349925022	3-BLACK	IH	PLR	LT	LA	M	R	-	-	3	4	-	-	-	8	-	-	-	12	13	14	15	-	77	78	79	80	SALEABLE	
									16	17	18	19	20	21	22	23	24	25	26	27	28	29	30	-	-	-	-	-		
									-	-	-	-	-	-	-	-	-	40	-	42	-	44	-							
									46	47	48	-	-	51	52	53	54	-	-	-	-	59	-	-	-	-	-	-		
									61	-	-	64	-	66	67	68	69	70	71	72	73	74	75	91	92	93	-	95		
GPEC RCPT CONN 95 CKT TOP LVR KEY 3/45	349925023	3-BLACK	IH	PLR	LT	LA	M	R	-	-	3	4	-	-	-	8	-	-	-	-	-	14	15	-	77	78	79	80	SALEABLE	
									16	17	18	-	20	21	22	23	24	25	26	-	28	29	30	-	-	-	-	-		
									-	-	-	-	-	-	-	-	-	40	-	42	-	44	-							
									46	47	48	-	-	51	52	53	54	-	-	57	-	59	-	-	-	-	-	-		
									61	-	-	64	-	66	67	68	69	70	71	72	73	74	75	91	92	93	-	95		
GPEC RCPT CONN 95 CKT TOP LVR KEY 3/47	349925024	3-BLACK	IH	PLR	LT	LA	M	R	-	-	3	4	-	-	-	8	-	-	-	-	-	14	15	-	77	78	79	80	SALEABLE	
									16	17	18	-	20	21	22	23	24	25	26	-	28	29	30	-	-	-	-	-		
									-	-	-	-	-	-	-	-	-	40	-	42	-	44	-							
									46	47	48	-	-	51	52	53	54	-	-	-	-	59	-	-	-	-	-	-		
									61	-	-	64	-	66	67	68	69	70	71	72	73	74	75	91	92	-	-	95		
GPEC RCPT CONN 95 CKT TOP LVR KEY 3/51	349925025	3-BLACK	IH	PLR	LT	LA	M	R	-	2	3	4	-	-	-	8	-	-	-	12	13	-	15	-	77	78	79	80	SALEABLE	
									16	17	18	19	-	-	22	23	-	25	26	-	28	29	30	-	-	-	-	-		
									-	-	-	-	-	36	-	-	-	40	-	42	-	-	-							
									-	47	48	-	-	51	52	53	54	-	-	-	-	-	-	-	-	-	-	-		
									61	-	63	64	65	66	67	68	69	70	-	72	73	74	-	91	-	-	-	-		
GPEC RCPT CONN 95 CKT TOP LVR KEY 3/43	349925026	3-BLACK	IH	PLR	LT	LA	M	R	-	2	3	4	-	-	-	8	-	-	-	12	13	14	15	76	77	78	79	80	SALEABLE	
									16	17	18	19	20	21	22	23	24	25	26	-	28	29	30	-	-	-	-	-		
									-	-	-	-	-	36	-	-	-	40	-	42	-	-	-							
									-	47	48	-	-	51	52	53	54	-	-	-	-	-	-	-	-	-	-	-		
									61	-	63	64	65	66	67	68	69	70	-	72	73	74	-	91	92	93	-	95		

molex

GPEC IV 95 WAY RECEPTACLE SEALED ASSEMBLY MAT SEAL

BOM AND PIN OUT SHEET

ASSEMBLY DESCRIPTION	ASSEMBLY PART NUMBER	COMPONENT THE PRESENCE OF AN ABBREVIATION INDICATES THE PRESENCE OF THAT COMPONENT.							BLOCKED TERMINALS CAVITY WITH A NUMBER INDICATES BLOCKED TERMINAL POSITION CAVITY WITHOUT A NUMBER INDICATES OPEN TERMINAL POSITION																				STATUS	COMMENTS
		OUTER HOUSING KEY/COLOR	INNER HOUSING	PLR	LEVER	LEVER ARM (x/2)	MAT SEAL	RING SEAL																					
GPEC RCPT CONN 95 CKT TOP LVR KEY 3/44	349925027	3-BLACK	IH	PLR	LT	LA	M	R	-	-	3	4	-	-	-	8	-	-	-	12	13	14	15		76	77	78	79	80	SALEABLE	
									16	17	18	19	20	21	22	23	24	25	26	-	28	29	30		-	-	-	-	-		
									-	-	-	-	-	36	-	-	-	40	-	42	-	-	-								
									-	47	48	-	-	51	52	53	54	-	-	-	-	-	-		-	-	-	-	-		
									61	-	63	64	65	66	67	68	69	70	-	72	73	74	-		91	92	93	-	95		
GPEC RCPT CONN 95 CKT TOP LVR KEY 3/66	349925028	3-BLACK	IH	PLR	LT	LA	M	R	-	-	3	4	5	-	-	8	-	-	-	-	-	-	-		-	77	-	79	80	SALEABLE	
									-	17	-	19	20	21	-	23	-	25	26	-	28	-	30		-	-	-	-	-		
									-	-	-	-	-	-	-	-	-	-	-	-	-	44	-								
									46	-	-	-	-	-	-	-	-	-	56	57	58	59	-		-	-	-	-	-		
									-	-	-	64	-	-	-	-	-	-	-	-	73	-	75		91	92	93	-	95		
GPEC RCPT CONN 95 CKT TOP LVR KEY 3/52	349925029	3-BLACK	IH	PLR	LT	LA	M	R	-	-	3	4	-	-	-	8	-	-	-	-	-	14	15		-	77	78	79	80	SALEABLE	
									16	17	18	-	20	21	22	23	-	25	26	-	28	-	30		-	-	-	-	-		
									-	-	-	-	-	-	-	-	-	40	-	-	-	44	-								
									46	47	48	-	-	51	52	53	54	-	-	-	-	59	-		-	-	-	-	-		
									61	-	-	-	-	66	67	68	-	70	71	72	73	74	-		91	92	93	-	95		
GPEC RCPT CONN 95 CKT TOP LVR KEY 3/50	349925030	3-BLACK	IH	PLR	LT	LA	M	R	-	-	3	4	-	-	-	8	-	-	-	-	-	14	15		76	-	78	79	80	SALEABLE	
									16	17	18	-	20	21	22	23	24	25	26	-	28	29	30		-	-	-	-	-		
									-	-	-	-	-	-	-	-	-	40	-	42	-	-	-								
									-	47	48	-	-	-	52	53	54	-	-	-	-	-	-		-	-	-	-	-		
									61	-	63	64	65	66	67	68	69	70	-	72	73	74	-		91	92	93	-	95		
GPEC RCPT CONN 95 CKT TOP LVR KEY 3/57	349925031	3-BLACK	IH	PLR	LT	LA	M	R	-	-	-	-	-	-	-	-	-	-	-	-	-	-	-		-	-	-	-	-	SALEABLE	
									-	-	-	19	-	21	-	-	24	25	-	-	-	-	-		-	-	-	-	-		
									-	-	33	-	-	-	-	-	39	-	41	-	43	44	-								
									-	-	48	49	50	51	52	53	-	55	-	-	58	59	60		-	-	88	89	-		
									61	62	63	64	65	66	67	68	69	70	71	72	73	74	75		-	-	93	94	-		
GPEC RCPT CONN 95 CKT TOP LVR KEY 3/47	349925032	3-BLACK	IH	PLR	LT	LA	M	R	-	-	-	4	5	-	-	8	-	-	-	12	13	14	15		-	77	78	79	-	SALEABLE	
									16	17	18	19	20	21	22	23	-	25	26	-	28	29	30		81	-	-	-	-		
									-	-	-	-	-	-	-	-	-	40	-	-	-	-	-								
									46	47	-	49	-	51	-	53	54	55	56	57	58	59	-		86	-	-	-	-		
									61	62	-	-	-	66	-	68	69	70	71	72	73	-	-		91	92	-	-	-		
GPEC RCPT CONN 95 CKT TOP LVR KEY 3/57	349925033	3-BLACK	IH	PLR	LT	LA	M	R	-	-	-	-	-	-	-	-	-	10	-	-	-	-	-		-	-	-	-	-	SALEABLE	
									-	-	-	19	-	21	-	-	24	-	-	-	-	-	-		-	-	-	-	-		
									-	32	33	-	35	-	-	-	39	-	-	42	43	44	45								
									-	-	-	-	50	51	52	53	-	55	56	-	58	59	60		-	-	88	89	-		
									61	62	63	64	65	66	67	68	69	70	71	72	73	74	75		-	-	-	-	-		
GPEC RCPT CONN 95 CKT TOP LVR KEY 3/55	349925034	3-BLACK	IH	PLR	LT	LA	M	R	-	-	3	4	-	-	-	8	-	-	-	-	-	14	15		-	77	78	79	80	SALEABLE	
									16	17	18	-	20	21	22	-	-	25	26	-	28	-	30		-	-	-	-	-		
									-	-	-	-	-	-	-	-	-	40	-	-	-	44	-								
									-	47	48	-	-	51	-	53	54	-	-	-	-	59	-		-	-	-	-	-		
									61	-	-	-	-	66	67	68	-	70	71	72	73	74	-		91	92	93	-	95		
GPEC RCPT CONN 95 CKT END LVR KEY 4/95	349926001	4-BLACK	IH	PLR	LE	LA	M	R	-	-	-	-	-	-	-	-	-	-	-	-	-	-	-		-	-	-	-	-	SALEABLE	
									-	-	-	-	-	-	-	-	-	-	-	-	-	-	-		-	-	-	-	-		
									-	-	-	-	-	-	-	-	-	-	-	-	-	-	-		-	-	-	-	-		
									-	-	-	-	-	-	-	-	-	-	-	-	-	-	-		-	-	-	-	-		
									-	-	-	-	-	-	-	-	-	-	-	-	-	-	-		-	-	-	-	-		
GPEC RCPT CONN 95 CKT END LVR KEY 4/72	349926002	4-BLACK	IH	PLR	LE	LA	M	R	-	-	3	-	-	6	7	-	9	-	-	-	-	-	15		-	-	-	-	-	SALEABLE	
									-	-	-	-	20	21	22	-	-	-	-	-	-	-	-		-	-	-	-	85		
									-	-	-	34	35	36	37	38	39	-	-	-	-	-	-								
									46	47	48	49	-	-	-	-	-	-	56	-	-	-	-		86	-	-	-	-		
									-	-	63	-	-	-	-	-	69	-	-	-	-	-	-		-	-	-	-	-		

molex

GPEC IV 95 WAY RECEPTACLE SEALED ASSEMBLY MAT SEAL

BOM AND PIN OUT SHEET

ASSEMBLY DESCRIPTION	ASSEMBLY PART NUMBER	COMPONENT THE PRESENCE OF AN ABBREVIATION INDICATES THE PRESENCE OF THAT COMPONENT.							BLOCKED TERMINALS CAVITY WITH A NUMBER INDICATES BLOCKED TERMINAL POSITION CAVITY WITHOUT A NUMBER INDICATES OPEN TERMINAL POSITION																					STATUS	COMMENTS
		OUTER HOUSING KEY/COLOR	INNER HOUSING	PLR	LEVER	LEVER ARM (x/2)	MAT SEAL	RING SEAL																						
GPEC RCPT CONN 95 CKT END LVR KEY 4/72	349926003	4-BLACK	IH	PLR	LE	LA	M	R	-	2	-	-	-	6	7	-	-	-	11	12	13	14	-	-	-	-	-	-	SALEABLE	
									-	-	-	19	-	21	-	-	-	-	-	27	28	-	-	-	82	-	-	-		
									31	-	-	-	-	-	-	-	-	-	41	-	-	-	45							
									46	47	-	-	-	-	-	-	-	-	-	-	-	-	-	-	87	-	-	-		
									61	-	-	64	-	-	67	-	-	-	-	72	-	74	-	-	-	-	-	-		
GPEC RCPT CONN 95 CKT END LVR KEY 4/63	349926004	4-BLACK	IH	PLR	LE	LA	M	R	-	2	-	-	5	6	7	-	-	-	11	12	13	14	-	-	-	78	-	-	SALEABLE	
									-	-	-	19	-	21	-	-	-	-	-	27	28	-	-	-	82	83	-	-		
									31	-	-	-	35	-	-	-	-	-	41	-	-	-	45							
									46	47	-	-	-	-	-	-	-	-	-	57	58	59	-	-	87	88	-	-		
									61	-	-	64	-	-	67	-	-	-	-	72	-	74	-	-	-	93	-	-		
GPEC RCPT CONN 95 CKT TOP LVR KEY 4/95	349927001	4-BLACK	IH	PLR	LT	LA	M	R	-	-	-	-	-	-	-	-	-	-	-	-	-	-	-	-	-	-	-	-	SALEABLE	
									-	-	-	-	-	-	-	-	-	-	-	-	-	-	-	-	-	-	-	-		
									-	-	-	-	-	-	-	-	-	-	-	-	-	-	-							
									-	-	-	-	-	-	-	-	-	-	-	-	-	-	-	-	-	-	-	-		
									-	-	-	-	-	-	-	-	-	-	-	-	-	-	-	-	-	-	-	-		
GPEC RCPT CONN 95 CKT TOP LVR KEY 4/76	349927002	4-BLACK	IH	PLR	LT	LA	M	R	-	-	-	-	-	-	-	-	-	-	-	-	-	-	15	-	-	-	-	-	SALEABLE	
									-	17	-	-	20	-	-	-	-	-	-	-	-	-	-	-	-	-	-	85		
									-	-	-	-	35	36	37	-	-	-	-	42	43	-	45							
									46	47	48	49	-	-	-	-	-	-	56	-	-	-	-	-	-	-	-	-		
									-	-	63	-	-	-	-	-	69	-	-	-	-	-	-	-	-	93	94	-		
GPEC RCPT CONN 95 CKT TOP LVR KEY 4/50	349927003	4-BLACK	IH	PLR	LT	LA	M	R	-	-	3	4	5	6	-	-	9	-	-	12	13	-	15	-	77	78	79	-	SALEABLE	
									16	17	18	19	20	21	-	23	24	25	26	-	28	-	30	-	-	-	-	-		
									-	-	-	-	-	-	-	38	-	-	-	-	-	44	-							
									46	47	-	49	-	51	-	53	54	-	56	-	-	59	-	86	-	-	-	-		
									61	-	-	-	-	66	67	68	69	70	71	-	73	74	75	91	-	-	-	-		
GPEC RCPT CONN 95 CKT TOP LVR KEY 4/53	349927004	4-BLACK	IH	PLR	LT	LA	M	R	-	-	3	4	5	-	-	-	9	-	-	-	-	-	15	-	77	78	79	-	SALEABLE	
									16	17	18	19	20	21	-	23	24	25	26	-	28	-	30	-	-	-	-	-		
									-	-	-	-	-	-	-	38	-	-	-	-	-	44	-							
									46	47	48	49	-	51	-	-	54	-	56	-	-	59	-	86	-	-	-	-		
									61	-	-	-	-	66	67	68	69	70	71	-	73	74	75	91	-	-	-	-		
GPEC RCPT CONN 95 CKT TOP LVR KEY 4/51	349927005	4-BLACK	IH	PLR	LT	LA	M	R	-	-	3	4	5	-	-	-	9	-	-	12	13	-	15	-	77	78	79	-	SALEABLE	
									16	17	18	19	20	21	-	23	24	25	26	-	28	-	30	-	-	-	-	-		
									-	-	-	-	-	-	-	38	-	-	-	-	-	44	-							
									46	47	-	49	-	51	-	53	54	-	56	-	-	59	-	86	-	-	-	-		
									61	-	-	-	-	66	67	68	69	70	71	-	73	74	75	91	-	-	-	-		
GPEC RCPT CONN 95 CKT TOP LVR KEY 4/50	349927006	4-BLACK	IH	PLR	LT	LA	M	R	-	-	3	4	-	-	-	-	9	-	-	12	13	-	15	-	77	78	79	-	SALEABLE	
									16	17	18	19	20	21	-	23	24	25	26	-	28	-	30	-	-	-	-	-		
									-	-	-	-	-	-	-	38	-	-	-	-	43	44	45							
									46	47	48	49	-	51	-	53	54	-	56	-	-	59	-	86	-	-	-	-		
									61	-	-	-	-	66	67	68	69	70	71	-	73	74	-	91	-	-	-	-		
GPEC RCPT CONN 95 CKT TOP LVR KEY 4/54	349927007	4-BLACK	IH	PLR	LT	LA	M	R	-	-	3	4	5	-	-	-	9	-	-	-	-	-	15	-	77	78	79	80	SALEABLE	
									16	17	18	19	20	-	-	23	24	25	26	-	28	-	-	-	-	-	-	-		
									-	-	-	-	-	-	-	38	-	-	-	-	-	44	-							
									46	47	-	49	-	51	-	-	54	-	56	-	-	59	-	86	-	-	-	-		
									61	-	-	-	-	66	67	68	69	70	71	-	73	74	75	91	-	-	-	95		
GPEC RCPT CONN 95 CKT TOP LVR KEY 4/46	349927008	4-BLACK	IH	PLR	LT	LA	M	R	-	-	3	4	-	-	-	-	9	-	-	12	13	-	15	-	77	78	79	80	SALEABLE	
									16	17	18	19	20	21	-	23	24	25	26	-	28	-	30	-	-	-	-	85		
									-	-	-	-	-	-	-	38	-	-	-	-	43	44	45							
									46	47	48	49	-	51	-	53	54	-	56	-	-	59	-	86	-	-	-	-		
									61	-	-	-	-	66	67	68	69	70	71	-	73	74	-	91	-	-	94	95		

molex

GPEC IV 95 WAY RECEPTACLE SEALED ASSEMBLY MAT SEAL

BOM AND PIN OUT SHEET

ASSEMBLY DESCRIPTION	ASSEMBLY PART NUMBER	COMPONENT THE PRESENCE OF AN ABBREVIATION INDICATES THE PRESENCE OF THAT COMPONENT.							BLOCKED TERMINALS CAVITY WITH A NUMBER INDICATES BLOCKED TERMINAL POSITION CAVITY WITHOUT A NUMBER INDICATES OPEN TERMINAL POSITION																				STATUS	COMMENTS
		OUTER HOUSING KEY/COLOR	INNER HOUSING	PLR	LEVER	LEVER ARM (x/2)	MAT SEAL	RING SEAL																					
GPEC RCPT CONN 95 CKT TOP LVR KEY 4/45	349927009	4-BLACK	IH	PLR	LT	LA	M	R	-	-	3	4	-	6	7	8	9	-	-	12	13	-	15		-	77	78	79	80	SALEABLE	
									16	17	18	19	20	-	-	23	24	25	26	-	28	-	-		-	-	-	-	85		
									-	-	-	-	-	-	-	38	-	-	41	-	43	44	45								
									46	47	48	49	-	51	-	53	54	-	56	-	-	59	-		86	-	-	-	-		
									61	-	-	-	-	66	67	68	-	70	71	-	73	74	-		91	-	-	94	95		
GPEC RCPT CONN 95 CKT TOP LVR KEY 4/42	349927010	4-BLACK	IH	PLR	LT	LA	M	R	-	-	3	4	-	6	7	8	9	-	-	12	13	-	15		-	77	78	79	80	SALEABLE	
									16	17	18	19	20	21	-	23	24	25	26	-	28	-	30		-	-	-	-	85		
									-	-	-	-	-	-	-	38	-	-	41	-	43	44	45								
									46	47	48	49	-	51	-	53	54	-	56	-	-	59	-		86	-	-	-	-		
									61	-	-	-	-	66	67	68	69	70	71	-	73	74	-		91	-	-	94	95		
GPEC RCPT CONN 95 CKT TOP LVR KEY 4/47	349927011	4-BLACK	IH	PLR	LT	LA	M	R	-	-	3	4	5	-	-	-	9	-	-	12	13	-	15		-	77	78	79	80	SALEABLE	
									16	17	18	-	20	21	-	23	24	25	26	-	28	-	30		-	-	-	-	85		
									-	-	-	-	-	-	-	38	-	-	-	-	43	44	45								
									46	47	-	49	-	51	-	53	54	-	56	-	-	59	-		86	-	-	-	-		
									61	-	-	-	-	66	67	68	69	70	71	-	73	74	-		91	-	-	94	95		
GPEC RCPT CONN 95 CKT TOP LVR KEY 4/52	349927012	4-BLACK	IH	PLR	LT	LA	M	R	1	2	3	4	5	6	-	-	9	-	-	-	-	14	15		-	77	-	79	80	SALEABLE	
									-	17	18	19	20	-	-	23	24	25	-	-	28	-	-		-	-	-	-	85		
									-	-	-	-	-	-	37	-	-	-	-	-	-	44	-								
									46	-	48	49	-	51	-	-	-	-	56	-	-	59	-		86	-	-	-	-		
									61	-	63	64	-	66	67	68	69	-	71	-	-	74	75		91	92	-	-	95		
GPEC RCPT CONN 95 CKT TOP LVR KEY 4/47	349927013	4-BLACK	IH	PLR	LT	LA	M	R	-	-	3	4	-	-	-	-	9	-	-	12	13	-	15		-	77	78	79	80	SALEABLE	
									16	17	18	-	20	21	-	23	24	25	26	-	28	-	30		-	-	-	-	85		
									-	-	-	-	-	-	-	38	-	-	-	-	43	44	45								
									46	47	48	49	-	51	-	53	54	-	56	-	-	59	-		86	-	-	-	-		
									61	-	-	-	-	66	67	68	69	70	71	-	73	74	-		91	-	-	94	95		
GPEC RCPT CONN 95 CKT TOP LVR KEY 4/50	349927014	4-BLACK	IH	PLR	LT	LA	M	R	-	-	3	4	-	-	-	-	9	-	-	12	13	-	15		-	77	78	79	80	SALEABLE	
									16	17	18	-	20	21	-	23	24	25	26	-	28	-	30		-	-	-	-	85		
									-	-	-	-	-	-	-	38	-	-	-	-	43	-	-								
									46	47	-	49	-	51	52	53	54	-	56	-	-	59	-		86	-	-	-	-		
									-	-	-	-	-	66	67	68	69	70	71	-	73	74	-		91	-	-	94	95		
GPEC RCPT CONN 95 CKT TOP LVR KEY 4/52	349927015	4-BLACK	IH	PLR	LT	LA	M	R	1	-	3	4	-	6	-	-	9	-	-	-	-	-	15		-	-	78	79	80	SALEABLE	
									16	17	-	19	-	21	-	23	24	25	26	-	28	29	30		-	-	-	-	85		
									-	-	-	-	-	-	-	-	-	-	-	42	-	44	-								
									46	-	-	49	-	51	-	53	54	55	56	-	-	59	-		86	-	-	-	-		
									-	-	-	64	-	66	67	68	69	70	71	-	-	74	75		91	-	-	-	95		
GPEC RCPT CONN 95 CKT TOP LVR KEY 4/50	349927016	4-BLACK	IH	PLR	LT	LA	M	R	-	-	3	4	-	-	-	-	9	-	-	12	13	-	15		-	77	78	79	80	SALEABLE	
									16	17	18	-	20	21	22	23	-	25	26	-	28	-	30		-	-	-	-	85		
									-	-	-	-	-	-	-	-	-	40	-	42	-	44	-								
									46	47	48	-	-	51	52	53	54	-	56	-	-	59	-		86	-	-	-	-		
									61	-	-	-	-	66	67	68	-	70	71	72	73	74	-		-	-	-	-	95		
GPEC RCPT CONN 95 CKT TOP LVR KEY 4/57	349927017	4-BLACK	IH	PLR	LT	LA	M	R	-	-	3	-	5	-	7	8	9	-	-	-	13	-	-		-	-	-	-	-	SALEABLE	
									-	-	-	19	20	-	22	23	24	25	26	-	28	-	-		-	-	-	-	85		
									31	32	-	34	35	36	37	-	39	-	-	42	43	44	-								
									46	-	-	49	50	51	52	-	-	-	-	57	-	-	-		86	-	88	-	-		
									-	-	-	-	-	-	-	-	69	70	-	-	-	74	-		-	-	-	94	95		
GPEC RCPT CONN 95 CKT TOP LVR KEY 4/39	349927018	4-BLACK	IH	PLR	LT	LA	M	R	-	-	3	4	-	6	7	8	9	-	-	12	13	-	15		-	77	78	79	80	SALEABLE	
									16	17	18	-	20	21	22	23	24	25	26	-	28	-	30		-	-	-	-	85		
									-	-	-	-	-	-	-	-	-	40	41	42	43	44	45								
									46	47	48	49	-	51	52	53	54	-	56	-	-	59	60		86	-	-	-	-		
									61	-	-	-	-	66	67	68	-	70	71	72	73	74	-		91	-	-	94	95		

molex

GPEC IV 95 WAY RECEPTACLE SEALED ASSEMBLY MAT SEAL

BOM AND PIN OUT SHEET

ASSEMBLY DESCRIPTION	ASSEMBLY PART NUMBER	COMPONENT THE PRESENCE OF AN ABBREVIATION INDICATES THE PRESENCE OF THAT COMPONENT.							BLOCKED TERMINALS CAVITY WITH A NUMBER INDICATES BLOCKED TERMINAL POSITION CAVITY WITHOUT A NUMBER INDICATES OPEN TERMINAL POSITION																				STATUS	COMMENTS
		OUTER HOUSING KEY/COLOR	INNER HOUSING	PLR	LEVER	LEVER ARM (x/2)	MAT SEAL	RING SEAL																					
GPEC RCPT CONN 95 CKT END LVR KEY N/95	349928000	NIL - GRAY	IH	PLR	LE	LA	M	R	-	-	-	-	-	-	-	-	-	-	-	-	-	-	-	-	-	-	-	NOT RECOMMENDED	
									-	-	-	-	-	-	-	-	-	-	-	-	-	-	-	-	-	-	-		
									-	-	-	-	-	-	-	-	-	-	-	-	-								
									-	-	-	-	-	-	-	-	-	-	-	-	-	-	-	-	-	-	-		
									-	-	-	-	-	-	-	-	-	-	-	-	-	-	-	-	-	-	-		
GPEC RCPT CONN 95 CKT END LVR KEY 5/95	349928001	5-BLACK	IH	PLR	LE	LA	M	R	-	-	-	-	-	-	-	-	-	-	-	-	-	-	-	-	-	-	-	SALEABLE	
									-	-	-	-	-	-	-	-	-	-	-	-	-	-	-	-	-	-	-		
									-	-	-	-	-	-	-	-	-	-	-	-	-								
									-	-	-	-	-	-	-	-	-	-	-	-	-	-	-	-	-	-	-		
									-	-	-	-	-	-	-	-	-	-	-	-	-	-	-	-	-	-	-		
GPEC RCPT CONN 95 CKT END LVR KEY 5/95	349928002	5-BLACK	IH	PLR	LE	LA	M	R	-	-	-	-	-	-	-	-	-	-	-	-	-	-	-	-	-	-	-	SALEABLE	
									-	-	-	-	-	-	-	-	-	-	-	-	-	-	-	-	-	-	-		
									-	-	-	-	-	-	-	-	-	-	-	-	-								
									-	-	-	-	-	-	-	-	-	-	-	-	-	-	-	-	-	-	-		
									-	-	-	-	-	-	-	-	-	-	-	-	-	-	-	-	-	-	-		
GPEC RCPT CONN 95 CKT END LVR KEY 5/49	349928003	5-BLACK	IH	PLR	LE	LA	M	R	-	2	3	4	-	-	-	-	-	-	-	-	14	15	-	-	-	-	-	SALEABLE	
									-	17	18	-	20	21	-	-	24	-	26	27	-	-	30	81	-	-	-	85		
									-	-	33	34	35	-	-	38	39	-	41	-	-	44	-						
									46	47	48	49	50	51	52	53	-	-	-	57	58	-	-	86	87	88	-	-		
									-	62	63	64	65	66	67	68	-	70	71	72	-	-	-	91	-	-	-	-		
GPEC RCPT CONN 95 CKT END LVR KEY 5/56	349928004	5-BLACK	IH	PLR	LE	LA	M	R	-	-	-	4	5	-	-	-	-	-	-	-	-	-	-	-	-	-	-	SALEABLE	
									-	-	-	-	-	21	-	23	-	-	26	27	-	-	-	-	-	-	-	-		
									31	32	-	-	-	-	37	-	39	-	-	42	43	-	-							
									-	-	48	49	50	51	52	53	54	55	56	-	58	59	60	-	87	-	-	-		
									61	62	63	64	65	-	67	68	-	-	-	72	73	74	75	-	92	93	94	-		
GPEC RCPT CONN 95 CKT END LVR KEY 5/44	349928005	5-BLACK	IH	PLR	LE	LA	M	R	-	-	-	-	5	-	-	-	-	-	-	12	-	-	-	76	77	78	79	80	SALEABLE	
									-	-	-	-	-	21	-	-	24	25	-	27	-	29	-	-	-	83	84	85		
									31	32	33	34	35	-	-	-	39	-	-	-	43	44	-						
									-	-	48	49	50	51	52	-	-	55	56	-	58	59	60	-	-	-	-	90		
									61	62	63	64	65	66	67	68	69	70	71	72	73	74	75	-	-	-	94	95		
GPEC RCPT CONN 95 CKT END LVR KEY 5/55	349928006	5-BLACK	IH	PLR	LE	LA	M	R	-	-	-	4	-	-	-	8	-	-	-	-	-	14	15	-	77	-	79	-	SALEABLE	
									-	17	18	-	20	21	-	23	24	-	-	27	-	-	30	81	-	-	-	-		
									-	-	33	34	35	-	-	38	-	-	-	-	-	44	-						
									46	47	48	49	50	51	52	53	54	-	-	57	-	-	-	86	87	88	-	90		
									-	62	63	-	-	66	67	-	-	-	-	72	-	-	-	91	-	-	-	-		
GPEC RCPT CONN 95 CKT END LVR KEY 5/43	349928007	5-BLACK	IH	PLR	LE	LA	M	R	1	2	3	-	5	6	7	8	9	10	11	12	13	14	-	76	77	78	79	80	SALEABLE	
									16	-	-	-	-	-	-	-	-	25	26	27	28	29	-	-	82	83	84	-		
									31	32	-	-	-	36	37	-	-	40	-	42	43	-	45							
									-	-	-	49	-	-	-	-	-	55	56	-	-	59	-	86	-	-	89	90		
									61	-	-	64	-	-	-	-	-	-	-	72	73	-	75	91	92	93	94	95		
GPEC RCPT CONN 95 CKT END LVR KEY 5/67	349928008	5-BLACK	IH	PLR	LE	LA	M	R	-	-	-	4	-	-	-	-	-	-	-	-	-	-	-	-	-	-	-	-	SALEABLE	
									-	-	-	-	-	-	-	-	-	25	-	-	-	29	-	-	-	-	-	-		
									31	32	-	-	-	-	37	-	39	-	-	42	-	-	-							
									-	-	-	-	50	51	52	-	54	-	-	-	-	-	60	-	-	88	89	-		
									61	-	63	64	-	66	-	68	-	70	71	72	73	74	75	-	-	93	94	-		
GPEC RCPT CONN 95 CKT END LVR KEY 5/52	349928009	5-BLACK	IH	PLR	LE	LA	M	R	-	-	-	4	-	-	-	-	-	-	-	-	-	-	15	-	-	-	-	-	SALEABLE	
									-	17	18	19	20	21	22	23	24	-	-	-	-	-	30	81	-	-	-	85		
									-	-	33	34	35	-	-	38	39	-	41	-	-	44	-						
									46	47	48	-	50	51	52	53	54	-	-	57	58	-	60	-	87	88	-	-		
									-	62	63	-	65	66	67	68	69	70	71	-	-	74	-	-	-	-	-	-		

molex

GPEC IV 95 WAY RECEPTACLE SEALED ASSEMBLY MAT SEAL

BOM AND PIN OUT SHEET

ASSEMBLY DESCRIPTION	ASSEMBLY PART NUMBER	COMPONENT THE PRESENCE OF AN ABBREVIATION INDICATES THE PRESENCE OF THAT COMPONENT.							BLOCKED TERMINALS CAVITY WITH A NUMBER INDICATES BLOCKED TERMINAL POSITION CAVITY WITHOUT A NUMBER INDICATES OPEN TERMINAL POSITION																				STATUS	COMMENTS
		OUTER HOUSING KEY/COLOR	INNER HOUSING	PLR	LEVER	LEVER ARM (x/2)	MAT SEAL	RING SEAL																					
GPEC RCPT CONN 95 CKT END LVR KEY 5/56	349928010	5-BLACK	IH	PLR	LE	LA	M	R	-	-	-	4	-	-	-	-	-	-	-	-	-	-	-	-	-	-	-	-	SALEABLE	
									-	-	-	-	-	-	-	-	24	25	-	-	-	29	-	-	-	-	-	-		
									31	32	33	-	35	-	37	-	39	-	41	42	43	44	-							
									-	-	-	-	50	51	52	-	54	-	56	-	58	-	60	-	-	88	89	-		
									61	-	63	64	65	66	67	68	69	70	71	72	73	74	75	-	-	93	94	-		
GPEC RCPT CONN 95 CKT TOP LVR KEY N/95	349929000	NIL - GRAY	IH	PLR	LT	LA	M	R	-	-	-	-	-	-	-	-	-	-	-	-	-	-	-	-	-	-	-	-	NOT RECOMMENDED	
									-	-	-	-	-	-	-	-	-	-	-	-	-	-	-	-	-	-	-	-		
									-	-	-	-	-	-	-	-	-	-	-	-	-	-	-							
									-	-	-	-	-	-	-	-	-	-	-	-	-	-	-	-	-	-	-	-		
									-	-	-	-	-	-	-	-	-	-	-	-	-	-	-	-	-	-	-	-		
GPEC RCPT CONN 95 CKT TOP LVR KEY 5/95	349929001	5-BLACK	IH	PLR	LT	LA	M	R	-	-	-	-	-	-	-	-	-	-	-	-	-	-	-	-	-	-	-	-	SALEABLE	
									-	-	-	-	-	-	-	-	-	-	-	-	-	-	-	-	-	-	-	-		
									-	-	-	-	-	-	-	-	-	-	-	-	-	-	-							
									-	-	-	-	-	-	-	-	-	-	-	-	-	-	-	-	-	-	-	-		
									-	-	-	-	-	-	-	-	-	-	-	-	-	-	-	-	-	-	-	-		
GPEC RCPT CONN 95 CKT TOP LVR KEY 5/51	349929002	5-BLACK	IH	PLR	LT	LA	M	R	-	-	3	4	-	-	-	-	9	-	-	12	13	-	15	-	77	78	-	80	SALEABLE	
									16	17	-	19	-	21	-	23	24	-	-	-	28	29	30	-	-	-	-	85		
									-	-	-	-	-	-	-	-	-	-	-	-	-	44	-							
									46	47	48	-	-	51	52	53	54	-	56	-	-	59	60	86	-	-	-	-		
									61	-	-	64	-	66	67	68	69	70	71	-	73	74	75	91	-	-	-	95		
GPEC RCPT CONN 95 CKT TOP LVR KEY 5/95	349929003	5-BLACK	IH	PLR	LT	LA	M	R	-	-	-	-	-	-	-	-	-	-	-	-	-	-	-	-	-	-	-	-	SALEABLE	
									-	-	-	-	-	-	-	-	-	-	-	-	-	-	-	-	-	-	-	-		
									-	-	-	-	-	-	-	-	-	-	-	-	-	-	-							
									-	-	-	-	-	-	-	-	-	-	-	-	-	-	-	-	-	-	-	-		
									-	-	-	-	-	-	-	-	-	-	-	-	-	-	-	-	-	-	-	-		
GPEC RCPT CONN 95 CKT TOP LVR KEY 5/45	349929004	5-BLACK	IH	PLR	LT	LA	M	R	-	-	3	4	-	6	7	8	9	-	-	12	13	-	15	-	77	78	-	80	SALEABLE	
									16	17	-	19	-	21	-	23	24	-	-	-	28	29	30	-	-	-	-	85		
									-	-	-	-	-	-	-	-	-	-	41	42	-	44	-							
									46	47	48	-	-	51	52	53	54	55	56	-	-	59	60	86	-	-	-	-		
									61	-	-	64	-	66	67	68	69	70	71	-	73	74	75	91	-	-	-	95		
GPEC RCPT CONN 95 CKT TOP LVR KEY 5/48	349929005	5-BLACK	IH	PLR	LT	LA	M	R	-	-	3	4	-	6	7	8	9	-	-	-	-	-	15	-	77	78	-	80	SALEABLE	
									16	17	-	19	-	21	-	23	24	-	-	-	28	29	30	-	-	-	-	85		
									-	-	-	-	-	-	-	-	-	-	41	42	-	44	-							
									46	47	48	-	-	51	-	53	54	55	56	-	-	59	60	86	-	-	-	-		
									61	-	-	64	-	66	67	68	69	70	71	-	73	74	75	91	-	-	-	95		
GPEC RCPT CONN 95 CKT TOP LVR KEY 5/50	349929006	5-BLACK	IH	PLR	LT	LA	M	R	-	-	-	4	5	-	-	-	-	-	-	-	-	-	-	-	-	-	-	-	SALEABLE	
									-	-	-	19	-	21	-	23	24	25	26	27	-	-	-	81	82	-	-	-		
									31	-	-	-	-	-	37	38	39	-	41	-	43	44	-							
									-	-	48	49	-	-	52	-	54	55	56	-	58	59	60	-	87	88	89	-		
									61	62	63	64	65	66	67	68	-	70	71	72	73	74	75	-	92	-	-	-		
GPEC RCPT CONN 95 CKT TOP LVR KEY 5/57	349929007	5-BLACK	IH	PLR	LT	LA	M	R	-	-	-	4	5	-	-	-	-	-	-	-	-	-	-	-	-	-	-	-	SALEABLE	
									-	-	-	-	-	21	-	23	-	25	26	27	-	-	-	-	-	-	-	-		
									31	32	-	-	-	-	37	-	39	-	-	42	43	-	-							
									-	-	-	49	50	51	52	53	54	-	56	-	58	59	60	-	87	88	-	-		
									61	62	63	64	65	66	67	68	-	-	-	72	73	74	75	-	92	-	-	-		
GPEC RCPT CONN 95 CKT TOP LVR KEY 5/66	349929008	5-BLACK	IH	PLR	LT	LA	M	R	-	-	-	-	-	-	-	-	-	-	-	12	-	-	-	-	-	-	-	80	SALEABLE	
									-	-	-	19	-	-	-	-	-	-	-	27	-	-	-	-	-	-	-	85		
									-	32	-	-	-	-	-	-	-	-	-	-	43	-	-							
									-	-	48	49	-	51	52	-	-	55	56	-	58	59	60	-	-	-	89	-		
									61	62	63	64	-	-	67	68	69	-	-	72	73	74	75	-	-	-	94	-		

molex

GPEC IV 95 WAY RECEPTACLE SEALED ASSEMBLY MAT SEAL

BOM AND PIN OUT SHEET

ASSEMBLY DESCRIPTION	ASSEMBLY PART NUMBER	COMPONENT THE PRESENCE OF AN ABBREVIATION INDICATES THE PRESENCE OF THAT COMPONENT.							BLOCKED TERMINALS CAVITY WITH A NUMBER INDICATES BLOCKED TERMINAL POSITION CAVITY WITHOUT A NUMBER INDICATES OPEN TERMINAL POSITION																				STATUS	COMMENTS
		OUTER HOUSING KEY/COLOR	INNER HOUSING	PLR	LEVER	LEVER ARM (x/2)	MAT SEAL	RING SEAL																					
GPEC RCPT CONN 95 CKT TOP LVR KEY 5/49	349929009	5-BLACK	IH	PLR	LT	LA	M	R	-	-	-	4	5	-	-	-	-	-	-	-	-	-	-	-	-	-	-	-	SALEABLE	
									-	-	18	19	-	21	-	23	24	25	26	27	-	-	-	81	82	-	-	-		
									31	-	-	-	-	-	37	38	39	-	41	-	43	44	-							
									-	-	48	49	-	-	52	-	54	55	56	-	58	59	60	-	87	88	89	-		
									61	62	63	64	65	66	67	68	-	70	71	72	73	74	75	-	92	-	-	-		
GPEC RCPT CONN 95 CKT TOP LVR KEY 5/94	349929010	5-BLACK	IH	PLR	LT	LA	M	R	-	-	-	-	-	-	-	-	-	-	-	-	-	-	-	-	-	-	-	-	SALEABLE	
									-	-	-	-	-	-	-	-	-	-	-	-	-	-	-	-	-	-	-	-		
									-	-	-	-	-	-	-	-	-	-	-	-	-	-	-							
									-	-	-	-	-	-	-	-	-	-	-	-	-	-	-	-	-	-	-	-		
									-	-	-	-	-	-	-	-	-	-	-	-	-	-	75	-	-	-	-	-		
GPEC RCPT CONN 95 CKT TOP LVR KEY 5/51	349929011	5-BLACK	IH	PLR	LT	LA	M	R	-	-	-	4	5	-	-	-	-	-	-	-	-	-	-	-	-	-	-	-	SALEABLE	
									-	-	18	19	-	21	-	23	24	25	26	27	-	-	-	81	82	-	-	-		
									31	-	-	-	-	-	37	38	39	-	41	-	43	44	-							
									-	-	48	49	-	-	52	-	54	55	56	-	58	59	60	-	87	88	89	-		
									61	62	63	64	65	66	67	68	-	-	-	72	73	74	75	-	92	-	-	-		
GPEC RCPT CONN 95 CKT TOP LVR KEY 5/54	349929012	5-BLACK	IH	PLR	LT	LA	M	R	-	-	-	4	5	-	-	-	-	-	-	-	-	-	-	-	-	-	-	-	SALEABLE	
									-	-	-	-	-	21	-	23	24	-	26	27	28	-	-	81	82	-	-	-		
									31	-	-	-	-	-	37	38	39	-	-	42	43	44	-							
									-	-	48	49	-	-	52	-	54	55	56	-	58	59	60	-	87	88	-	-		
									61	62	63	64	65	-	67	68	-	-	-	72	73	74	75	-	92	-	94	-		
GPEC RCPT CONN 95 CKT TOP LVR KEY 5/39	349929013	5-BLACK	IH	PLR	LT	LA	M	R	-	-	3	4	-	6	7	8	9	-	-	12	13	-	15	-	77	78	79	80	SALEABLE	
									16	17	18	19	20	21	22	23	-	25	26	-	28	29	30	-	-	-	-	85		
									-	-	-	-	-	-	-	38	-	40	41	42	-	44	-							
									46	47	48	-	-	51	52	53	54	55	56	-	-	59	-	86	-	-	-	-		
									61	-	-	64	-	66	67	68	69	70	71	72	73	74	75	-	-	-	-	95		
GPEC RCPT CONN 95 CKT TOP LVR KEY 5/40	349929014	5-BLACK	IH	PLR	LT	LA	M	R	-	-	3	4	-	6	7	8	9	-	-	12	13	-	15	-	77	78	79	80	SALEABLE	
									16	17	18	19	20	21	22	23	-	25	26	-	28	29	30	-	-	-	-	85		
									-	-	-	-	-	-	-	38	-	40	41	-	-	44	-							
									46	47	48	-	-	51	52	53	54	55	56	-	-	59	-	86	-	-	-	-		
									61	-	-	64	-	66	67	68	69	70	71	72	73	74	75	-	-	-	-	95		
GPEC RCPT CONN 95 CKT TOP LVR KEY 5/38	349929015	5-BLACK	IH	PLR	LT	LA	M	R	-	-	3	4	-	6	7	8	9	-	-	12	13	-	15	-	77	78	79	80	SALEABLE	
									16	17	18	19	20	21	22	23	-	25	26	-	28	29	30	-	-	-	-	85		
									-	-	-	-	-	-	-	38	-	40	41	42	-	44	-							
									46	47	48	-	-	51	52	53	54	55	56	-	-	59	-	86	-	-	-	-		
									61	-	-	64	-	66	67	68	69	70	71	72	73	74	75	91	-	-	-	95		
GPEC RCPT CONN 95 CKT TOP LVR KEY 5/60	349929016	5-BLACK	IH	PLR	LT	LA	M	R	-	-	-	4	-	-	-	-	-	10	-	-	-	-	-	-	-	-	-	-	SALEABLE	
									-	-	-	-	-	-	-	23	-	-	-	27	-	-	-	-	-	-	-	-		
									-	32	-	-	-	-	37	-	-	-	-	-	43	44	45							
									-	-	48	49	-	51	52	-	-	55	56	-	58	59	60	-	87	88	89	-		
									61	62	63	64	65	-	67	68	-	-	-	72	73	74	75	-	92	93	94	-		
GPEC RCPT CONN 95 CKT TOP LVR KEY 5/58	349929017	5-BLACK	IH	PLR	LT	LA	M	R	-	-	-	4	-	-	-	-	-	10	-	-	-	-	-	-	-	-	-	-	SALEABLE	
									-	-	-	-	-	-	-	23	-	-	-	27	-	-	-	-	-	-	-	-		
									-	32	-	-	-	-	37	-	-	-	-	-	43	44	45							
									-	-	48	49	-	51	52	-	-	55	56	-	58	59	60	-	87	88	89	-		
									61	62	63	64	65	-	67	68	-	70	71	72	73	74	75	-	92	93	94	-		
GPEC RCPT CONN 95 CKT TOP LVR KEY 5/49	349929018	5-BLACK	IH	PLR	LT	LA	M	R	-	-	-	4	-	6	-	-	-	-	-	-	-	-	15	-	-	-	-	-	SALEABLE	
									16	17	18	19	20	21	-	23	24	-	-	27	-	-	30	81	-	-	-	85		
									-	32	33	34	35	-	-	38	39	-	41	-	43	44	-							
									46	47	48	-	50	51	52	53	54	-	-	57	58	-	-	86	87	88	-	-		
									-	62	-	64	65	66	-	68	-	70	71	-	-	-	75	91	-	-	-	-		

molex

GPEC IV 95 WAY RECEPTACLE SEALED ASSEMBLY MAT SEAL

BOM AND PIN OUT SHEET

ASSEMBLY DESCRIPTION	ASSEMBLY PART NUMBER	COMPONENT THE PRESENCE OF AN ABBREVIATION INDICATES THE PRESENCE OF THAT COMPONENT.							BLOCKED TERMINALS CAVITY WITH A NUMBER INDICATES BLOCKED TERMINAL POSITION CAVITY WITHOUT A NUMBER INDICATES OPEN TERMINAL POSITION																					STATUS	COMMENTS
		OUTER HOUSING KEY/COLOR	INNER HOUSING	PLR	LEVER	LEVER ARM (x/2)	MAT SEAL	RING SEAL																						
GPEC RCPT CONN 95 CKT TOP LVR KEY 5/40	349929019	5-BLACK	IH	PLR	LT	LA	M	R	-	-	-	4	-	-	-	8	-	-	-	-	13	14	15		-	77	-	79	-	SALEABLE	
									-	17	18	19	20	21	-	23	24	-	26	27	-	-	30		81	-	83	84	-		
									-	-	33	34	35	-	37	38	39	-	41	42	-	44	-								
									46	47	48	49	50	51	52	53	54	-	-	57	58	-	60		86	87	88	-	90		
									61	62	63	64	-	66	67	68	-	-	-	72	-	74	-		91	-	-	-	-		
GPEC RCPT CONN 95 CKT TOP LVR KEY 5/58	349929020	5-BLACK	IH	PLR	LT	LA	M	R	-	2	3	4	-	-	-	8	-	-	-	12	13	-	-		-	-	-	-	-	SALEABLE	
									16	17	18	19	-	-	22	23	-	25	26	-	28	29	-		-	-	-	-	-		
									-	-	-	-	-	36	-	-	-	40	-	42	-	-	-								
									-	47	48	-	-	51	52	53	54	-	-	-	-	-	-		-	-	-	-	-		
									61	-	63	64	65	66	67	68	69	70	-	72	73	74	-		-	-	-	-	-		
GPEC RCPT CONN 95 CKT TOP LVR KEY 5/51	349929021	5-BLACK	IH	PLR	LT	LA	M	R	-	2	3	4	-	-	-	8	-	-	-	12	13	-	15		-	77	78	79	80	SALEABLE	
									16	17	18	19	-	-	22	23	-	25	26	-	28	29	30		-	-	-	-	-		
									-	-	-	-	-	36	-	-	-	40	-	42	-	-	-								
									-	47	48	-	-	51	52	53	54	-	-	-	-	-	-		-	-	-	-	-		
									61	-	63	64	65	66	67	68	69	70	-	72	73	74	-		91	-	-	-	-		
GPEC RCPT CONN 95 CKT TOP LVR KEY 5/36	349929022	5-BLACK	IH	PLR	LT	LA	M	R	-	-	3	4	-	6	7	8	9	-	-	12	13	-	15		-	77	78	79	80	SALEABLE	
									16	17	18	19	20	21	22	23	24	25	26	-	28	29	30		-	-	-	-	85		
									-	-	-	-	-	-	-	38	-	40	41	42	-	44	-								
									46	47	48	-	-	51	52	53	54	55	56	-	-	59	60		86	-	-	-	-		
									61	-	-	64	-	66	67	68	69	70	71	72	73	74	75		91	-	-	-	95		
GPEC RCPT CONN 95 CKT TOP LVR KEY 5/63	349929023	5-BLACK	IH	PLR	LT	LA	M	R	-	-	-	4	-	-	-	-	-	-	-	-	-	-	-		-	-	-	-	-	SALEABLE	
									-	-	-	-	-	21	-	-	-	25	26	27	-	29	-		81	82	-	-	-		
									31	32	-	-	-	-	37	-	-	-	-	42	-	-	-								
									-	-	-	49	-	51	52	-	-	-	-	-	58	-	60		-	-	88	89	-		
									61	-	63	64	-	66	67	68	-	70	71	-	73	74	75		-	-	93	94	-		
GPEC RCPT CONN 95 CKT TOP LVR KEY 5/28	349929024	5-BLACK	IH	PLR	LT	LA	M	R	1	-	-	4	5	-	-	8	-	10	-	-	-	-	-		76	77	78	79	80	SALEABLE	
									-	17	-	19	-	21	-	23	24	-	-	27	28	-	-		81	82	83	84	85		
									-	32	33	-	35	36	37	-	-	-	41	42	43	44	45								
									-	-	48	49	50	51	52	53	54	55	56	-	58	59	60		-	87	88	89	90		
									61	62	63	64	65	66	67	68	69	70	71	72	73	74	75		-	92	93	94	95		
GPEC RCPT CONN 95 CKT TOP LVR KEY 5/39	349929025	5-BLACK	IH	PLR	LT	LA	M	R	-	-	3	4	-	6	7	8	9	-	-	12	13	-	15		-	77	78	79	80	SALEABLE	
									16	17	18	19	20	21	22	23	-	25	26	-	28	29	30		-	-	-	-	85		
									-	-	-	-	-	-	-	38	-	40	41	-	-	44	-								
									46	47	48	-	-	51	52	53	54	55	56	-	-	59	-		86	-	-	-	-		
									61	-	-	64	-	66	67	68	69	70	71	72	73	74	75		91	-	-	-	95		
GPEC RCPT CONN 95 CKT TOP LVR KEY 5/51	349929026	5-BLACK	IH	PLR	LT	LA	M	R	-	-	-	4	5	-	-	-	-	-	-	-	-	-	-		-	-	-	-	-	SALEABLE	
									-	-	18	19	-	21	-	23	24	25	26	27	-	-	-		81	82	-	-	-		
									-	-	-	-	-	-	37	38	39	-	41	-	43	44	-								
									-	-	48	49	-	-	52	-	54	55	56	-	58	59	60		-	87	88	-	-		
									61	62	63	64	65	66	67	68	-	70	71	72	73	74	75		-	92	-	-	-		
GPEC RCPT CONN 95 CKT TOP LVR KEY 5/30	349929027	5-BLACK	IH	PLR	LT	LA	M	R	1	-	-	4	5	-	-	8	-	10	-	-	-	-	-		76	77	78	79	80	SALEABLE	
									-	17	-	19	-	21	-	23	24	-	-	27	28	-	-		81	82	83	84	85		
									-	32	33	-	35	36	37	-	-	-	41	42	43	44	45								
									-	-	48	49	50	51	52	53	54	55	56	-	58	59	60		-	87	88	89	90		
									61	62	63	64	65	66	67	68	69	-	-	72	73	74	75		-	92	93	94	95		
GPEC RCPT CONN 95 CKT TOP LVR KEY 5/0	349929028	5-BLACK	IH	PLR	LT	LA	M	R	1	2	3	4	5	6	7	8	9	10	11	12	13	14	15		76	77	78	79	80	SALEABLE	
									16	17	18	19	20	21	22	23	24	25	26	27	28	29	30		81	82	83	84	85		
									31	32	33	34	35	36	37	38	39	40	41	42	43	44	45								
									46	47	48	49	50	51	52	53	54	55	56	57	58	59	60		86	87	88	89	90		
									61	62	63	64	65	66	67	68	69	70	71	72	73	74	75		91	92	93	94	95		

molex

GPEC IV 95 WAY RECEPTACLE SEALED ASSEMBLY MAT SEAL

BOM AND PIN OUT SHEET

ASSEMBLY DESCRIPTION	ASSEMBLY PART NUMBER	COMPONENT THE PRESENCE OF AN ABBREVIATION INDICATES THE PRESENCE OF THAT COMPONENT.							BLOCKED TERMINALS CAVITY WITH A NUMBER INDICATES BLOCKED TERMINAL POSITION CAVITY WITHOUT A NUMBER INDICATES OPEN TERMINAL POSITION																					STATUS	COMMENTS
		OUTER HOUSING KEY/COLOR	INNER HOUSING	PLR	LEVER	LEVER ARM (x/2)	MAT SEAL	RING SEAL																						
GPEC RCPT CONN 95 CKT TOP LVR KEY 5/53	349929029	5-BLACK	IH	PLR	LT	LA	M	R	-	-	-	4	5	-	-	-	-	-	-	-	-	-	-	-	-	-	-	-	SALEABLE	
									-	-	-	19	-	21	-	23	-	25	26	27	-	-	-	81	82	-	-	-		
									-	-	-	-	-	-	37	38	39	-	41	-	43	44	-							
									-	-	48	49	-	-	52	-	54	55	56	-	58	59	60	-	87	88	-	-		
									61	62	63	64	65	66	67	68	-	70	71	72	73	74	75	-	92	-	-	-		
GPEC RCPT CONN 95 CKT TOP LVR KEY 5/71	349929030	5-BLACK	IH	PLR	LT	LA	M	R	-	-	-	4	-	-	-	-	-	-	-	-	-	-	-	-	-	-	-	-	SALEABLE	
									-	-	-	-	-	-	-	-	-	25	-	-	-	29	-	-	-	-	-	-		
									31	32	-	-	-	-	37	-	-	-	-	42	-	-	-							
									-	-	-	-	-	51	52	-	-	-	-	-	-	-	60	-	-	88	89	-		
									61	-	63	64	-	66	-	68	-	70	71	-	73	74	75	-	-	93	94	-		
GPEC RCPT CONN 95 CKT TOP LVR KEY 5/72	349929031	5-BLACK	IH	PLR	LT	LA	M	R	-	-	-	4	-	-	-	-	-	-	-	-	-	-	-	-	-	-	-	-	SALEABLE	
									-	-	-	-	-	-	-	-	-	25	-	-	-	29	-	-	-	-	-	-		
									31	32	-	-	-	-	37	-	-	-	-	-	-	-	-							
									-	-	-	-	-	51	52	-	-	-	-	-	-	-	60	-	-	88	89	-		
									61	-	63	64	-	66	-	68	-	70	71	-	73	74	75	-	-	93	94	-		
GPEC RCPT CONN 95 CKT TOP LVR KEY 5/52	349929032	5-BLACK	IH	PLR	LT	LA	M	R	-	-	-	-	-	6	-	-	-	-	-	-	-	-	-	-	-	-	-	-	SALEABLE	
									-	17	-	-	-	21	-	-	-	-	-	27	28	29	30	-	82	-	-	85		
									31	32	33	34	-	36	-	-	-	40	-	42	-	-	45							
									-	47	48	-	-	51	52	53	-	-	-	-	58	59	-	86	87	88	89	90		
									61	-	63	64	-	-	67	68	69	70	71	-	73	74	75	91	-	93	94	-		
GPEC RCPT CONN 95 CKT TOP LVR KEY 5/53	349929033	5-BLACK	IH	PLR	LT	LA	M	R	-	-	-	-	-	6	-	-	-	-	-	-	-	-	-	-	-	-	-	-	SALEABLE	
									-	17	-	-	-	21	-	-	-	-	-	27	28	29	30	-	82	-	-	85		
									31	32	33	34	-	36	-	-	-	40	-	42	-	-	45							
									-	47	48	-	-	51	52	53	-	-	-	-	58	59	-	86	87	88	-	90		
									61	-	63	64	-	-	67	68	69	70	71	-	73	74	75	91	-	93	94	-		
GPEC RCPT CONN 95 CKT TOP LVR KEY 5/68	349929034	5-BLACK	IH	PLR	LT	LA	M	R	-	-	-	-	-	-	-	-	-	-	-	-	-	-	-	-	-	-	-	-	SALEABLE	
									-	-	-	-	-	-	-	23	-	25	26	-	-	-	-	-	-	-	-	-		
									31	-	-	-	-	-	-	-	-	-	-	-	43	-	-							
									-	-	-	49	-	-	52	-	54	-	56	-	58	59	60	-	87	88	-	-		
									61	62	63	64	65	66	67	68	-	-	-	72	73	74	75	-	92	-	-	-		
GPEC RCPT CONN 95 CKT TOP LVR KEY 5/29	349929035	5-BLACK	IH	PLR	LT	LA	M	R	1	-	-	4	5	-	-	8	-	10	-	-	-	-	-	76	77	78	79	80	SALEABLE	
									-	17	-	19	-	21	-	23	24	-	-	27	28	-	-	81	82	83	84	85		
									-	32	33	-	35	36	37	-	-	-	41	42	43	44	45							
									-	-	48	49	50	51	52	53	54	55	56	-	58	-	60	-	87	88	89	90		
									61	62	63	64	65	66	67	68	69	70	71	72	73	74	75	-	92	93	94	95		
GPEC RCPT CONN 95 CKT TOP LVR KEY 5/94	349929036	5-BLACK	IH	PLR	LT	LA	M	R	-	-	-	-	-	-	-	-	-	-	-	-	-	-	-	-	-	-	-	-	SALEABLE	
									-	-	-	-	-	-	-	-	-	-	-	-	-	-	-	-	-	-	-	-		
									-	-	-	-	-	-	-	-	-	-	-	-	-	-	-							
									-	-	-	-	-	-	-	-	-	-	-	-	-	-	-	-	-	-	-	-		
									-	-	-	-	-	-	-	68	-	-	-	-	-	-	-	-	-	-	-	-		
GPEC RCPT CONN 95 CKT TOP LVR KEY 5/53	349929037	5-BLACK	IH	PLR	LT	LA	M	R	-	-	-	4	-	-	-	-	-	-	-	-	-	-	15	-	-	-	-	-	SALEABLE	
									-	17	18	19	20	21	22	23	24	-	-	-	-	-	30	81	-	-	-	85		
									-	-	33	34	35	-	-	38	39	-	41	-	-	44	-							
									46	47	48	-	50	51	52	53	54	-	-	57	58	-	60	-	87	88	-	-		
									-	62	63	-	65	66	-	68	69	70	71	-	-	74	-	-	-	-	-	-		
GPEC RCPT CONN 95 CKT TOP LVR KEY 5/52	349929038	5-BLACK	IH	PLR	LT	LA	M	R	-	-	-	4	-	-	-	-	-	-	-	-	-	-	15	-	-	-	-	-	SALEABLE	
									-	17	18	19	20	21	22	23	24	-	-	-	-	-	30	81	-	-	-	85		
									-	-	33	34	35	-	-	38	39	-	41	-	-	44	-							
									46	47	48	-	50	51	52	53	54	-	-	57	58	-	60	-	87	88	-	-		
									-	62	63	-	65	66	67	68	69	70	71	-	-	74	-	-	-	-	-	-		

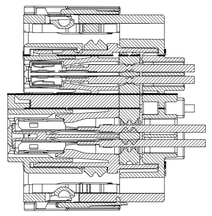

TERMINALS AND TPA SHOWN
IN FINAL LOCKED POSITION

SECTION X-X

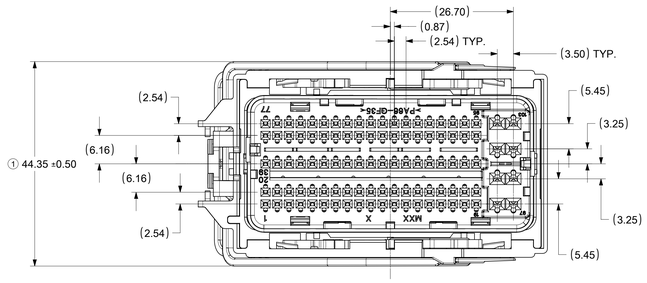

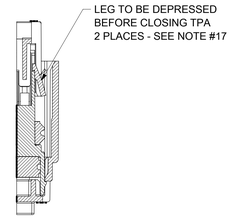

SECTION Z-Z

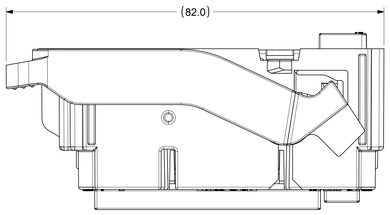

TPA SHOWN IN CLOSED POSITION
AND LEVER IN MATE POSITION

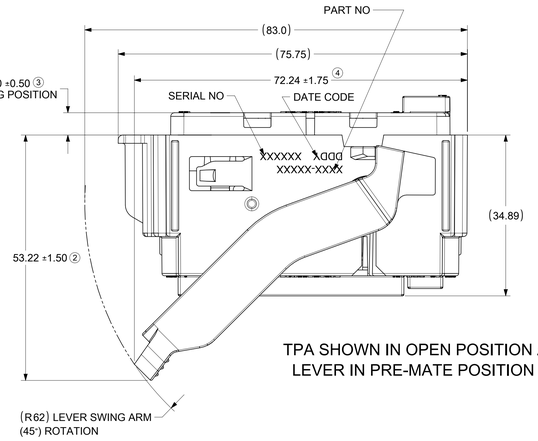

TPA SHOWN IN OPEN POSITION AND
LEVER IN PRE-MATE POSITION

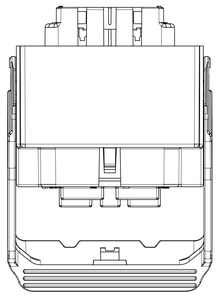

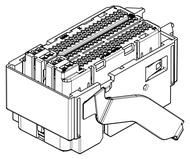

AROUND-THE-END LEVER OPTION
P/N 34993-0001, KEY 1

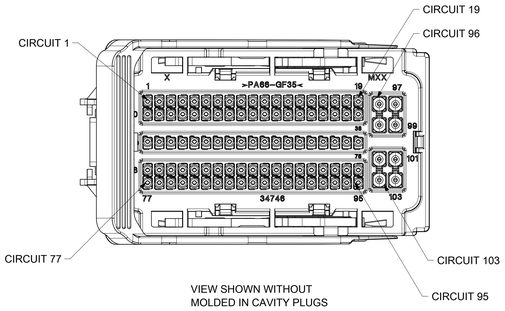

VIEW SHOWN WITHOUT
MOLDED IN CAVITY PLUGS

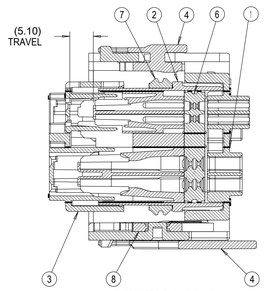

SECTION Y-Y

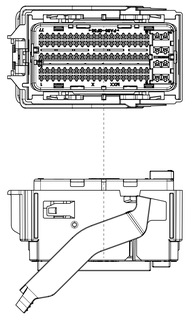

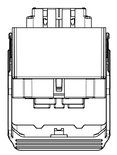

FULL SIZE VIEWS

BILL OF MATERIAL																
QTY.										ITEMS	MOLEX PART NUMBER	DESCRIPTION	COLOR	RECYCLING CODE	WEIGHT (GRAMS)
								1	1	1	347460501	OUTER SHROUD HOUSING KEYING OPTION "1"	BLACK	>PA66-GF35<	26.84g
						1	1			1	347460502	OUTER SHROUD HOUSING KEYING OPTION "2"	BLACK	>PA66-GF35<	26.84g
				1	1					1	347460503	OUTER SHROUD HOUSING KEYING OPTION "3"	BLACK	>PA66-GF35<	26.84g
		1	1							1	347460504	OUTER SHROUD HOUSING KEYING OPTION "4"	BLACK	>PA66-GF35<	26.84g
1	1									1	347460505	OUTER SHROUD HOUSING KEYING OPTION "5"	BLACK	>PA66-GF35<	26.84g
1	1	1	1	1	1	1	1	1	1	2	347460300	CAVITY SECTION HOUSING	BLACK	>PA66-GF35<	19.71g
1	1	1	1	1	1	1	1	1	1	3	349930401	TPA	NATURAL	>PA66-GF35<	7.50g
	1		1		1		1		1	4	347450801	MATE ASSIST LEVER END LATCH	GRAY	>PA66-GF35<	6.54g
1		1		1		1		1		5	347450802	MATE ASSIST LEVER OVER-THE-TOP	GRAY	>PA66-GF35<	6.10g
1	1	1	1	1	1	1	1	1	1	6	347460600	GROMMET SEAL	LT BLUE	NA	5.97g
1	1	1	1	1	1	1	1	1	1	7	347450700	INTERFACIAL SEAL	GREEN	NA	1.47g
2	2	2	2	2	2	2	2	2	2	8	347450805	LEVER ARM	GRAY	>PA66-GF35<	0.55g
349939001	349938001	349937001	349936001	349935001	349934001	349933001	349932001	349931001	349930001	MOLEX ASSY PART NUMBER	ALL CAVITY PLUGS REMOVED				

NOTES: UNLESS OTHERWISE SPECIFIED

1. PART MUST CONFORM TO USCAR/SAE-2 REV 5 DATED NOV2007.
   EXCEPTIONS: NONE
2. THE OPERATING ENVIRONMENT CRITERIA FOR THIS CONNECTOR SYSTEM IS USCAR TEMPERATURE CLASS 3, SEALING CLASS S3 AND VIBRATION CLASS V1.
3. ASSEMBLIES WILL ONLY PASS HIGH PRESSURE SPRAY REQUIREMENTS WITH WIRE DRESS COVER ATTACHED.
4. MAXIMUM LEVER ENGAGEMENT FORCE POPULATED WITH TERMINALS IS NOT TO EXCEED 75N.
5. TERMINAL TPA/PLR IS SHIPPED TO HARNESS MANUFACTURER IN PRE-LOAD POSITION AS SHOWN.
6. ALL PLASTIC PARTS MUST HAVE MATERIAL IDENTIFICATION SYMBOLS CLEARLY MARKED, WHEREVER PACKAGE SIZE PERMITS.
7. ENGINEERING APPROVAL REQUIRED FOR ALL SOURCING AND TOOLING OF THIS PART.
8. FOR ENGINEERING APPROVED SOURCE SEE ENGINEERING RELEASE.
9. ENGINEERING APPROVAL OF SAMPLE FROM SUPPLIER IS REQUIRED PRIOR TO AUTHORIZATION OF PART PRODUCTION.
10. CHANGES IN DESIGN COMPOSITION OR PROCESSING OF THE PART PREVIOUSLY APPROVED FOR PART PRODUCTION REQUIRES PRIOR ENGINEERING APPROVAL.
11. GENERAL TOLERANCE:
    LINEAR DIMENSION: ±0.10
    ANGULAR DIMENSION: ±3°
12. 0.3 MAXIMUM RADIUS PERMISSIBLE ON EDGES AND FILLETS SHOWN AS SHARP FOR PLASTIC PARTS.
13. PARTS ARE TO BE FREE OF SCRATCHES, DISCOLORATION, SALT RESIDUE, OR OTHER IMPERFECTIONS THAT MAY AFFECT FUNCTION OR FIT OF PART.
14. SOURCE IDENTIFICATION MARK, PRODUCTION DATE CODE, AND ASSEMBLY PART NUMBER MUST BE PERMANENTLY APPLIED ON THE PART WITH 1.5MM MINIMUM LETTER SIZE FROM THE BOTTOM TO THE TOP OF THE CHARACTERS AND LEGIBLE WHEREVER PACKAGE SIZE PERMITS OR OTHER AGREEMENTS ARE MADE. MARKING MAY BE LOCATED ON EITHER SIDE OF THE PART.
15. 25% MAXIMUM REGRIND ALLOWABLE IN MOLDED COMPONENTS.
16. SEE MOLEX APPLICATION SPEC AS-34992-001 FOR CONNECTOR SERVICE & USEAGE INSTRUCTIONS.
17. OPTIONAL WIREDRESS COVERS FOR THE AROUND-THE-END LEVER OPTION ARE SHIPPED SEPARATELY
18. WIREDRESS COVER FOR THE OVER-THE-TOP LEVER OPTION IS SHIPPED SEPARATELY
19. OPTIONAL 0.64 LOOSE PIECE PLUG, 34676-0002, IS SHIPPED SEPARATELY
20. OPTIONAL 1.5 LOOSE PIECE PLUG, 34345-4001, IS SHIPPED SEPARATELY
21. MOLEX MX150 TERMINAL REMOVAL TOOL P/N 63813-1500
22. MOLEX 0.64 TERMINAL REMOVAL TOOL P/N 63813-3501
23. TPA/PLR MUST BE REMOVED TO SERVICE THE 0.64 TERMINALS
24. TPA SEATING TOOL P/N 346760200 / 346760201
    SEE SHEET 2 FOR ADDITIONAL INFORMATION
25. FOR PINOUT AND DRESS COVER CONFIGURATION CHART SEE DOCUMENT: 349920002-SD

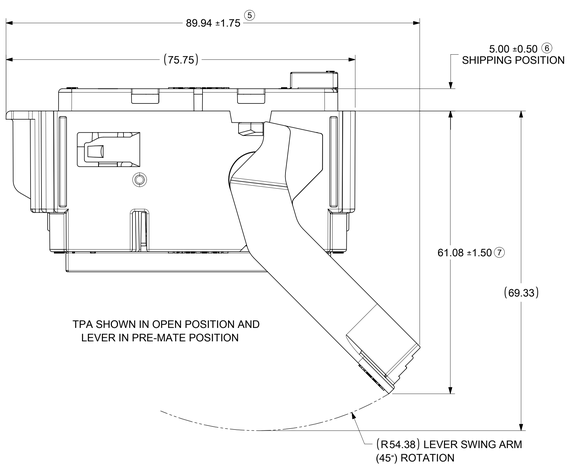

TPA SHOWN IN OPEN POSITION AND
LEVER IN PRE-MATE POSITION

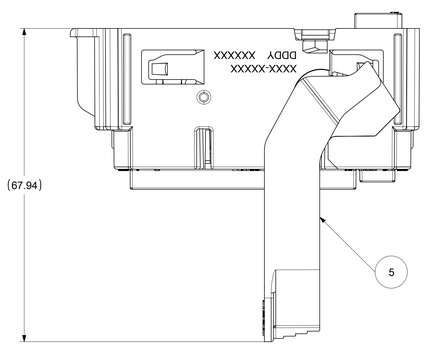

TPA SHOWN IN CLOSED POSITION AND LEVER IN MATE POSITION
LOCKING FEATURES TO BE DESIGNED INTO DRESS COVER FOR THIS LEVER

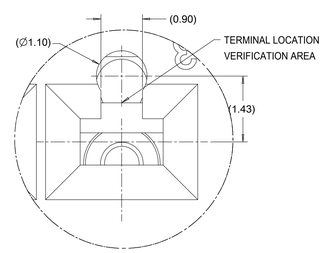

DETAIL M
SCALE 20:1
1.5 TERMINAL LOCATION
VERIFICATION HOLE

DESCRIPTION	NOMINAL TERMINAL SIZE	COLOR/ PLATING	SUPPLIER PART NUMBER	MATERIAL/SPECIFICATION NUMBER	APPLICABLE WIRE SIZE
					ES-AU5T-1A348-AA REV A MIL 123A
TERMINAL - FEMALE (Ag)	0.64	SILVER	2077131254	COPPER ALLOY/SILVER PLATE	0.35mm² (DIA 1.20 - 1.40)
					0.50mm² (DIA 1.40 - 1.70)
TERMINAL - FEMALE (Ag)	0.64	SILVER	2077131354	COPPER ALLOY/SILVER PLATE	0.75mm² (DIA 1.70 - 1.90)

TERMINAL - FEMALE (Sn)	1.50	TIN	330122003	COPPER ALLOY/TIN PLATE	22AWG(DIA 1.50 - 1.65)

TERMINAL - FEMALE (Sn)	1.50	TIN	330122004	COPPER ALLOY/TIN PLATE	0.35mm² (DIA 1.20 - 1.40)
					0.50mm² (DIA 1.40 - 1.70)
TERMINAL - FEMALE (Sn)	1.50	TIN	330122002	COPPER ALLOY/TIN PLATE	20AWG (DIA 1.70 - 1.85)
					0.75mm² (DIA 1.70 - 1.90)
					18AWG (DIA 1.91 - 2.06)
					0.80mm²
TERMINAL - FEMALE (Sn)	1.50	TIN	330122001	COPPER ALLOY/TIN PLATE	16AWG (DIA 2.18 - 2.34)
					1.50mm² (DIA 2.20 - 2.40)

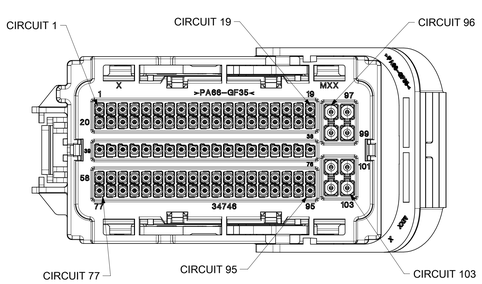

VIEW SHOWN WITH
MOLDED IN CAVITY PLUGS

OVER-THE-TOP LEVER OPTION
P/N 34993-1001, KEY 1

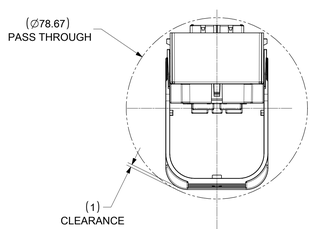

SCALE 1:1

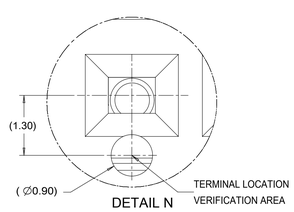

DETAIL N
SCALE 20:1
0.64 TERMINAL LOCATION
VERIFICATION HOLE

SYMBOLS	DIMENSION UNITS	SCALE	CURRENT REV DESC: NOTE AND TABLE UPDATED			
= 0	mm	2:1				
= 0	GENERAL TOLERANCES (UNLESS SPECIFIED)					
= 0	ANGULAR TOL	±	EC NO:	677806		
= 0	4 PLACES	±	DRWN:	NBOHIDAR	2021/09/15	
= 0	3 PLACES	±	CHK'D:	BDICK01	2021/09/28	
= 0	2 PLACES	±	APPR:	BDICK01	2021/09/28	
= 0	1 PLACE	±	INITIAL REVISION:			
= 0	0 PLACES	±	DRWN:	NBOHIDAR	2018/09/01	
= 0	DRAFT WHERE APPLICABLE MUST REMAIN WITHIN DIMENSIONS		APPR:	APROFFITT	2018/09/07	
= 0						

SEE NOTES

THIS DRAWING CONTAINS INFORMATION THAT IS PROPRIETARY TO MOLEX ELECTRONIC TECHNOLOGIES, LLC AND SHOULD NOT BE USED WITHOUT WRITTEN PERMISSION

molex

GPEC IV CONNECTOR ASSEMBLY
103 CIRCUIT

PRODUCT CUSTOMER DRAWING

DOCUMENT NUMBER	DOC TYPE	DOC PART	REVISION
349930001-SD	PSD	000	A8

THIRD ANGLE PROJECTION	DRAWING	SERIES	MATERIAL NUMBER	CUSTOMER	SHEET NUMBER
	E-SIZE	34993	CHARTED	GENERAL MARKET	1 OF 3

DOCUMENT STATUS	P1	RELEASE DATE	2021/09/28 01:26:06

KEYWAY DEFINITION

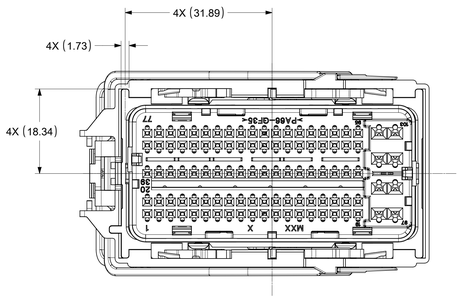

34993-0XXX (END LATCH LEVER)
34993-1XXX (TOP LATCH LEVER)
KEY OPTION 1

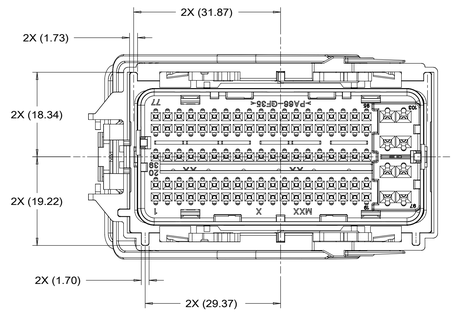

34993-6XXX (END LATCH LEVER)
34993-7XXX (TOP LATCH LEVER)
KEY OPTION 4

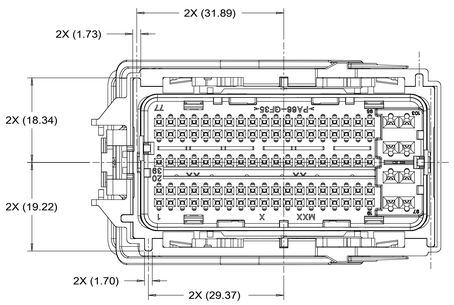

34993-2XXX (END LATCH LEVER)
34993-3XXX (TOP LATCH LEVER)
KEY OPTION 2

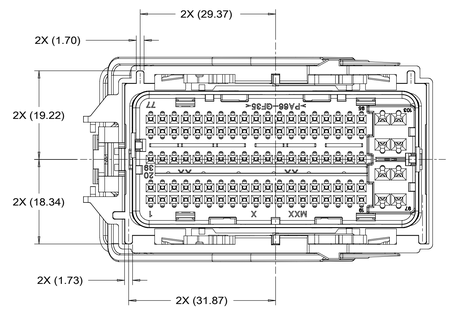

34993-8XXX (END LATCH LEVER)
34993-9XXX (TOP LATCH LEVER)
KEY OPTION 5

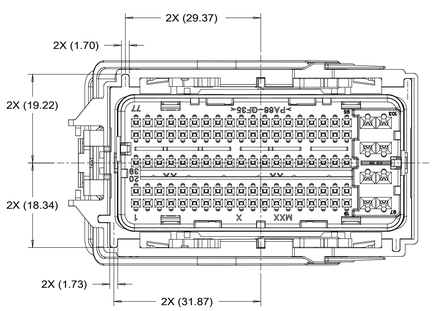

34993-4XXX (END LATCH LEVER)
34993-5XXX (TOP LATCH LEVER)
KEY OPTION 3

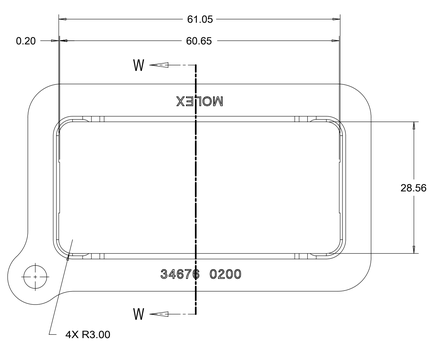

TPA SEATING TOOL

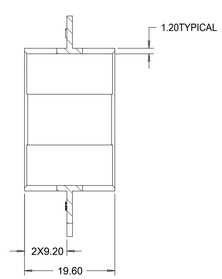

SECTION W-W

RECOMMENDED MATING INTERFACE

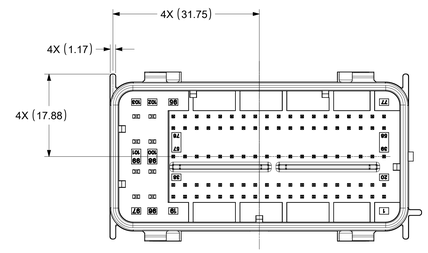

KEY OPTION 1

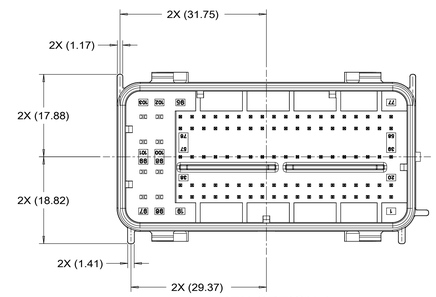

KEY OPTION 4

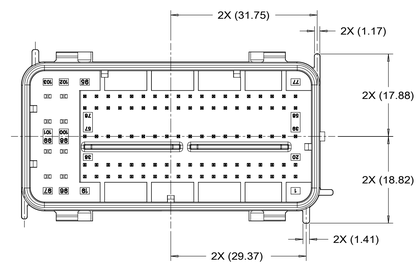

KEY OPTION 2

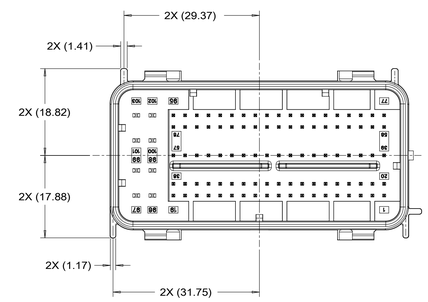

KEY OPTION 5

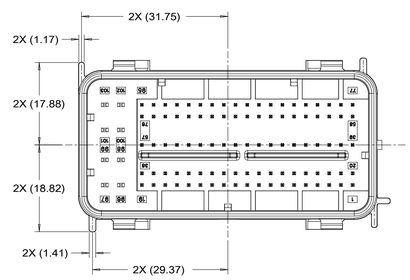

KEY OPTION 3

SYMBOLS	
FA	= 0
FC	= 0
FB	= 0
S	= 0
	= 0
C	= 0
	= 0
	= 0
G	= 0

THIS DRAWING CONTAINS INFORMATION THAT IS PROPRIETARY TO MOLEX ELECTRONIC TECHNOLOGIES, LLC AND SHOULD NOT BE USED WITHOUT WRITTEN PERMISSION

DIMENSION UNITS	SCALE
mm	2:1

GENERAL TOLERANCES (UNLESS SPECIFIED)

ANGULAR TOL	±
4 PLACES	±
3 PLACES	±
2 PLACES	±
1 PLACE	±
0 PLACES	±

DRAFT WHERE APPLICABLE MUST REMAIN WITHIN DIMENSIONS

CURRENT REV DESC: NOTE AND TABLE UPDATED

EC NO: 677806
DRWN: NBOHIDAR 2021/09/15
CHK'D: BDICK01 2021/09/28
APPR: BDICK01 2021/09/28

INITIAL REVISION:
DRWN: NBOHIDAR 2018/09/01
APPR: APROFFITT 2018/09/07

SEE NOTES

molex

GPEC IV CONNECTOR ASSEMBLY
103 CIRCUIT

PRODUCT CUSTOMER DRAWING

DOCUMENT NUMBER	DOC TYPE	DOC PART	REVISION
349930001-SD	PSD	000	A8

THIRD ANGLE PROJECTION	DRAWING	SERIES	MATERIAL NUMBER	CUSTOMER	SHEET NUMBER
	E-SIZE	34993	CHARTED	GENERAL MARKET	2 OF 3

DOCUMENT STATUS	P1	RELEASE DATE	2021/09/28 01:26:06

RECOMMENDED MATING INTERFACE

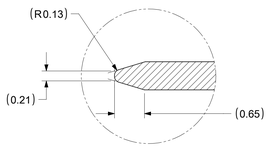

DETAIL W
SCALE 20:1
OPTIONAL
0.64 WIRE PIN

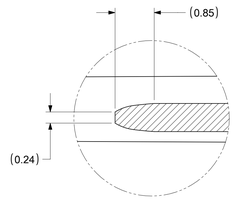

DETAIL R
SCALE 20:1
OPTIONAL
0.64 STAMPED PIN

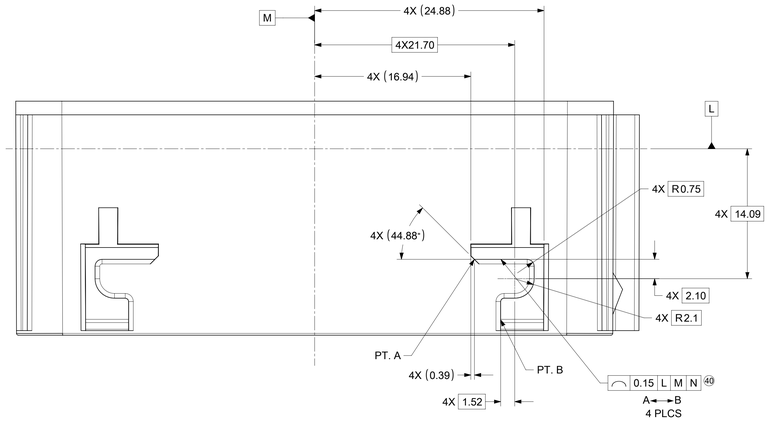

NOTES FOR INTERFACE: UNLESS OTHERWISE SPECIFIED

1. GENERAL TOLERANCES:
   LINEAR DIMENSIONS: ±0.20
   ANGULAR DIMENSIONS: ±3°
2. DRAFT ANGLE PERMISSIBLE ONLY WITHIN DRAWING TOLERANCE.
3. SEAL SURFACE. NO WITNESS LINES OR DAMAGE PERMITTED.
4. ALL UNMARKED RADII TO BE 0.5 MAX. UNLESS OTHERWIS SPECIFIED.
5. ZERO DRAFT AREA
6. CONNECTION SYSTEM VALIDATED TO USCAR2, REVISION 5
7. PIN ROW HEIGHTS ARE INTENTIONALLY OFFSET

POWER CONTACT PIN NOTES: (1.5 CIRCUITS)

1. MATERIAL: Cu ALLOY
   WITH TENSILE STRENGTH > 410 N/mm²
   ELECTRICAL CONDUCTANCE > 16 Sm/mm²
   (>28% IACS AT 20°C)
2. BASE PLATING: 1.25-2.25µm Ni OVERALL.
3. REFLOW TIN PLATING: 2.5-4.0µm OVERALL.
4. CONTACT MUST BE FREE OF BURRS AND SHARP EDGES.
5. PROCESS COMPONENTS IN A LOW-SULFUR ENVIRONMENT AND AVOID CONTACT WITH MATERIALS THAT TRANSFER SULFUR TO THE ENVIRONMENT.

SIGNAL CONTACT PIN NOTES (0.64 CIRCUITS)

1. MATERIAL: Cu ALLOY
   WITH TENSILE STRENGTH > 410 N/mm²
   ELECTRICAL CONDUCTANCE > 16 Smm/mm²
   (>28% IACS AT 20°C)
2. BASE PLATING 1.25-2.5µm NI OVERALL.
3. SILVER PLATING: 2-4µm Ag WITH TARNISH RESISTANT TREATMENT APPLIED TO THE ENTIRE SILVER SURFACE.
4. CONTACT MUST BE FREE OF BURRS AND SHARP EDGES.
5. FOR SILVER PLATING: ELECTRICAL PERFORMANCE IS NOT AFFECTED BY GREY OR BLACK TARNISH ON THE SILVER PLATING SURFACE. ACCEPTABLE SILVER PIN SURFACES CAN INCLUDE GREY OR BLACK TARNISH.
6. PROCESS COMPONENTS IN A LOW-SULFER ENVIRONMENT AND AVOID CONTACT WITH MATERIALS THAT TRANSFER SULFER TO THE ENVIRONMENT.

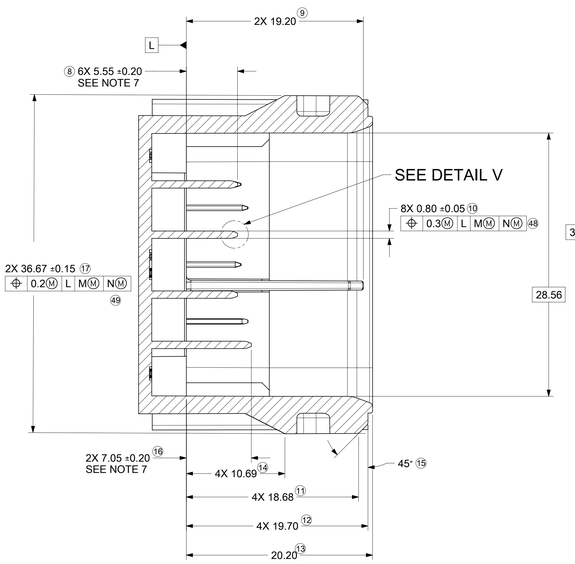

SECTION Y-Y

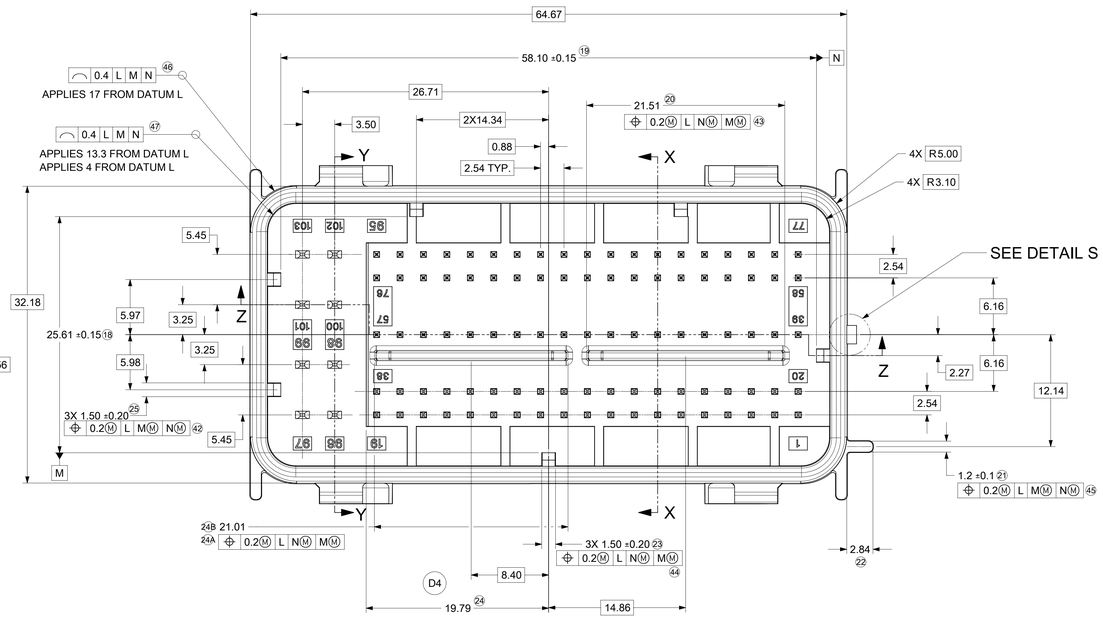

KEY "1" SHOWN

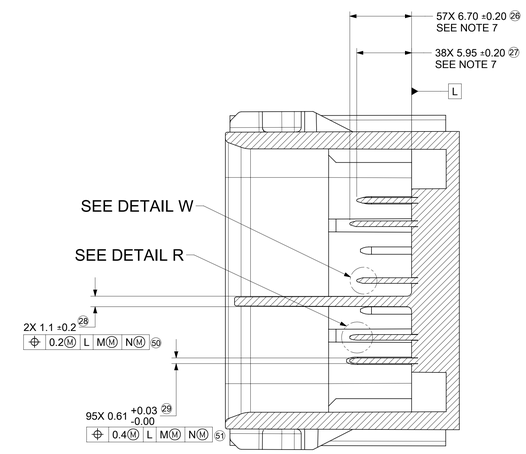

SECTION X-X

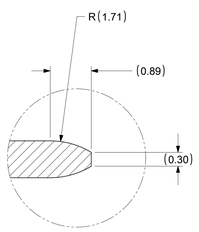

DETAIL V
SCALE 20:1
TYPICAL 1.5 BLADE

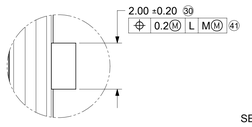

DETAIL S
SCALE 10:1

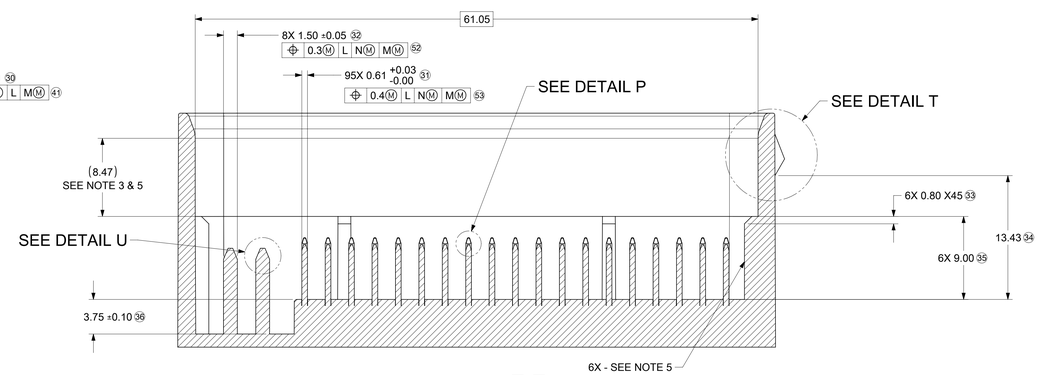

SECTION Z-Z

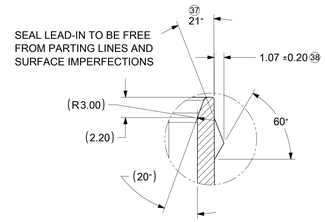

DETAIL T
SCALE 4:1

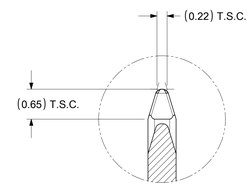

DETAIL P
SCALE 20:1
TYPICAL 0.64 PINS

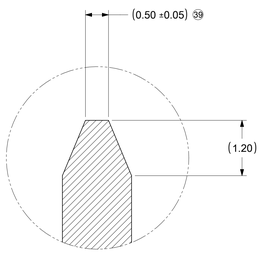

DETAIL U
SCALE 20:1
TYPICAL 1.5 BLADE

SYMBOLS	THIS DRAWING CONTAINS INFORMATION THAT IS PROPRIETARY TO MOLEX ELECTRONIC TECHNOLOGIES, LLC AND SHOULD NOT BE USED WITHOUT WRITTEN PERMISSION			
EA = 0	DIMENSION UNITS: mm	SCALE: 2:1	CURRENT REV DESC: NOTE AND TABLE UPDATED	molex
EC = 0	GENERAL TOLERANCES (UNLESS SPECIFIED)			
EB = 0	ANGULAR TOL ±		EC NO: 677806	GPEC IV CONNECTOR ASSEMBLY 103 CIRCUIT
S = 0	4 PLACES ±		DRWN: NBOHIDAR 2021/09/15	
▼ = 0	3 PLACES ±		CHK'D: BDICK01 2021/09/28	
C = 0	2 PLACES ±		APPR: BDICK01 2021/09/28	PRODUCT CUSTOMER DRAWING
☒ = 0	1 PLACE ±		INITIAL REVISION:	DOCUMENT NUMBER: 349930001-SD; DOC TYPE: PSD; DOC PART: 000; REVISION: A8
■ = 0	0 PLACES ±		DRWN: NBOHIDAR 2018/09/01	
G = 0	DRAFT WHERE APPLICABLE MUST REMAIN WITHIN DIMENSIONS		APPR: APROFFITT 2018/09/07	
	THIRD ANGLE PROJECTION	DRAWING: E-SIZE	SERIES: 34993	MATERIAL NUMBER: CHARTED; CUSTOMER: GENERAL MARKET; SHEET NUMBER: 3 OF 3

SEE NOTES

DOCUMENT STATUS	P1	RELEASE DATE	2021/09/28 01:26:06

molex

GPEC IV 103 WAY RECEPTACLE SEALED ASSEMBLY MAT SEAL

BOM AND PIN OUT SHEET

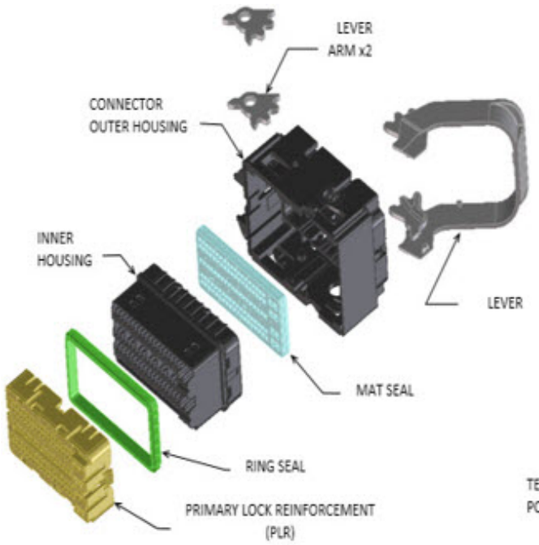

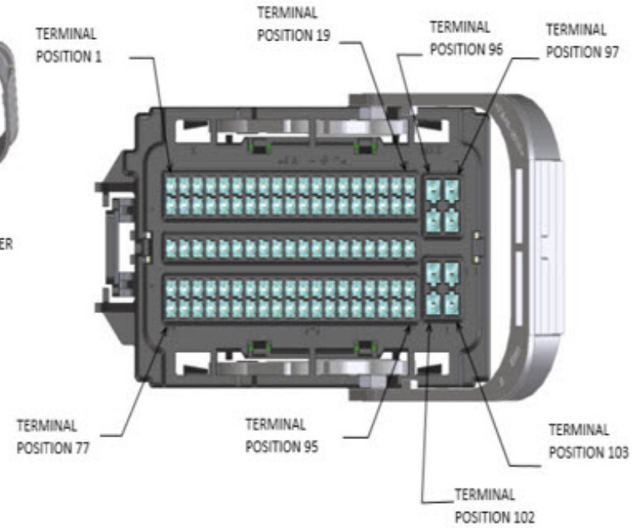

ABBREVIATION	DESCRIPTION	COLOR	MATERIAL
1-BLACK	OUTER HOUSING KEYING OPTION 1	BLACK	PA66 GF35
2-BLACK	OUTER HOUSING KEYING OPTION 2	BLACK	PA66 GF35
3-BLACK	OUTER HOUSING KEYING OPTION 3	BLACK	PA66 GF35
4-BLACK	OUTER HOUSING KEYING OPTION 4	BLACK	PA66 GF35
5-BLACK	OUTER HOUSING KEYING OPTION 5	BLACK	PA66 GF35
NIL - GRAY	OUTER HOUSING KEYING OPTION NIL	GRAY	PA66 GF35
IH	INNER HOUSING	BLACK	PA66 GF35
PLR	TPA/PLR	NATURAL	PA66 GF35
LE	LEVER - END LATCH	GRAY	PA66 GF35
LT	LEVER - TOP LATCH	GRAY	PA66 GF35
LA	LEVER ARM	GRAY	PA66 GF35
M	MAT SEAL	LIGHT BLUE	INHERENTLY LUBRICATED SILICONE
R	RING SEAL	GREEN	INHERENTLY LUBRICATED SILICONE

FOR ADDITIONAL INFORMATION SEE 349930001-SD

LOOK AT 2032000001-SD FOR WIRE DRESS COVER OPTION

ASSEMBLY DESCRIPTION	ASSEMBLY PART NUMBER	COMPONENT THE PRESENCE OF AN ABBREVIATION INDICATES THE PRESENCE OF THAT COMPONENT.							BLOCKED TERMINALS CAVITY WITH A NUMBER INDICATES BLOCKED TERMINAL POSITION CAVITY WITHOUT A NUMBER INDICATES OPEN TERMINAL POSITION																		STATUS	COMMENTS
		OUTER HOUSING KEY/COLOR	INNER HOUSING	PLR	LEVER	LEVER ARM (x/2)	MAT SEAL	RING SEAL																			
GPEC RCPT CONN 103 CKT END LVR KEY 1/103	349930001	1-BLACK	IH	PLR	LE	LA	M	R	-	-	-	-	-	-	-	-	-	-	-	-	-	-	-	-	-	-	SALEABLE	
									-	-	-	-	-	-	-	-	-	-	-	-	-	-	-	-	-	-		
									-	-	-	-	-	-	-	-	-	-	-	-	-	-	-	-				
									-	-	-	-	-	-	-	-	-	-	-	-	-	-	-	-	-	-		
									-	-	-	-	-	-	-	-	-	-	-	-	-	-	-	-	-	-		
GPEC RCPT CONN 103 CKT END LVR KEY 1/0	349930002	1-BLACK	IH	PLR	LE	LA	M	R	1	2	3	4	5	6	7	8	9	10	11	12	13	14	15	16	17	18	SALEABLE	
									19	96	97																	
									20	21	22	23	24	25	26	27	28	29	30	31	32	33	34	35	36	37		
									38	98	99																	
									39	40	41	42	43	44	45	46	47	48	49	50	51	52	53	54	55	56		
									57																			
									58	59	60	61	62	63	64	65	66	67	68	69	70	71	72	73	74	75		
									76	100	101																	
									77	78	79	80	81	82	83	84	85	86	87	88	89	90	91	92	93	94		
									95	102	103																	
GPEC RCPT CONN 103 CKT END LVR KEY 1/84	349930003	1-BLACK	IH	PLR	LE	LA	M	R	-	-	-	-	-	-	-	-	-	-	-	-	-	-	-	-	-	-	SALEABLE	
									-	-	-	-	-	-	-	-	-	-	-	-	-	-	-	-	-	-		
									-	-	-	-	-	-	-	-	-	-	-	-	-	-	-	-	-	-		
									-	-	-	-	-	-	-	-	-	-	-	-	-	-	-	-	-	-		
									-	-	-	-	-	-	-	-	-	-	-	-	-	-	-	-	-	-		
									77	78	79	80	81	82	83	84	85	86	87	88	89	90	91	92	93	94		
									95	-	-																	
GPEC RCPT CONN 103 CKT END LVR KEY 1/59	349930004	1-BLACK	IH	PLR	LE	LA	M	R	-	-	-	-	-	6	7	8	9	10	11	12	-	-	-	-	-	-	SALEABLE	
									-	-	-	-	-	-	-	-	-	-	-	-	-	-	-	-	-	-		
									-	21	22	23	-	-	-	27	-	29	-	-	-	-	-	-	-	-		
									-	98	-																	
									-	-	41	42	43	44	45	46	47	48	49	50	51	52	-	-	-	-		
									57																			
									-	59	-	-	-	-	-	65	-	67	68	-	-	-	72	73	74	75		
									76	-	101																	
									-	78	-	80	-	-	-	84	85	-	-	-	-	-	-	93	94	95		
									-	-	103																	
GPEC RCPT CONN 103 CKT END LVR KEY 1/58	349930005	1-BLACK	IH	PLR	LE	LA	M	R	-	-	-	-	-	6	7	8	9	10	11	12	-	-	-	-	-	-	SALEABLE	
									-	96	-																	
									-	21	22	23	-	-	-	27	-	29	-	-	-	-	-	-	-	-		
									-	98	-																	
									-	-	41	42	43	44	45	46	47	48	49	50	51	52	-	-	-	-		
									57																			
									-	59	-	-	-	-	-	65	-	67	68	-	-	-	72	73	74	75		
									76	-	101																	
									-	78	-	80	-	-	-	84	85	-	-	-	-	-	-	93	94	95		
									-	-	103																	
GPEC RCPT CONN 103 CKT END LVR KEY 1/48	349930006	1-BLACK	IH	PLR	LE	LA	M	R	1	2	-	-	5	-	7	8	9	-	11	-	13	-	15	-	17	18	SALEABLE	
									-	-	-																	
									-	21	22	-	24	25	26	-	-	29	-	-	-	33	34	35	-	37		
									-	-	-																	
									-	40	-	-	43	44	45	46	47	-	-	-	51	52	53	54	-	56		
									57																			
									58	59	60	61	62	-	64	65	-	67	-	69	70	-	-	73	-	-		
									-	-	-																	
									-	-	-	-	81	82	-	84	85	86	87	88	-	90	-	92	-	-		
									-	102	103																	

molex

GPEC IV 103 WAY RECEPTACLE SEALED ASSEMBLY MAT SEAL

BOM AND PIN OUT SHEET

ASSEMBLY DESCRIPTION	ASSEMBLY PART NUMBER	COMPONENT THE PRESENCE OF AN ABBREVIATION INDICATES THE PRESENCE OF THAT COMPONENT.							BLOCKED TERMINALS CAVITY WITH A NUMBER INDICATES BLOCKED TERMINAL POSITION CAVITY WITHOUT A NUMBER INDICATES OPEN TERMINAL POSITION																						STATUS	COMMENTS
		OUTER HOUSING KEY/COLOR	INNER HOUSING	PLR	LEVER	LEVER ARM (x/2)	MAT SEAL	RING SEAL																							
GPEC RCPT CONN 103 CKT END LVR KEY 1/54	349930007	1-BLACK	IH	PLR	LE	LA	M	R	-	-	-	4	5	6	-	8	9	10	-	12	13	-	-	-	-	-	-	96	-	SALEABLE	
									-	21	-	-	-	-	26	-	28	-	30	31	-	-	-	35	-	-	-	98	-		
									39	40	41	42	43	44	45	46	47	48	-	-	-	-	-	-	-	-	57				
									58	59	60	61	62	63	64	65	66	67	68	-	-	71	72	73	74	-	-	100	-		
									77	78	-	-	-	-	-	-	-	-	87	-	-	90	-	-	93	-	-	102	-		
GPEC RCPT CONN 103 CKT END LVR KEY 1/44	349930008	1-BLACK	IH	PLR	LE	LA	M	R	1	2	-	-	5	-	7	8	9	-	11	-	13	-	15	-	17	18	-	-	-	SALEABLE	
									-	21	22	-	24	25	26	-	-	29	-	-	-	33	34	35	-	37	38	-	-		
									-	40	-	-	43	44	45	46	47	-	-	-	51	52	53	54	-	56	57				
									58	59	60	61	62	-	64	65	-	67	-	69	70	71	-	73	-	-	-	-	-		
									-	-	79	80	81	82	-	84	85	86	87	88	-	90	-	92	-	-	-	102	103		
GPEC RCPT CONN 103 CKT END LVR KEY 1/57	349930009	1-BLACK	IH	PLR	LE	LA	M	R	-	-	-	4	5	6	-	-	9	10	-	12	13	-	-	-	-	-	-	96	-	SALEABLE	
									-	21	-	-	-	-	26	-	28	-	30	31	-	-	-	35	-	-	-	98	-		
									39	40	41	42	43	44	45	46	47	48	-	-	-	-	-	-	-	-	57				
									58	59	60	61	62	63	64	65	66	67	68	-	-	71	72	73	74	-	-	100	-		
									77	78	-	-	-	-	-	-	-	-	-	-	-	90	-	-	-	-	-	102	-		
GPEC RCPT CONN 103 CKT END LVR KEY 1/51	349930010	1-BLACK	IH	PLR	LE	LA	M	R	-	-	-	-	-	6	7	8	9	10	11	12	-	-	15	-	-	-	-	96	-	SALEABLE	
									-	21	22	23	-	-	-	27	-	29	-	-	-	-	-	-	-	-	38	98	-		
									-	-	41	42	43	44	45	46	47	48	49	50	51	52	-	-	-	-	57				
									-	59	-	-	-	-	64	65	66	67	68	69	-	-	72	-	74	75	76	-	101		
									77	78	79	80	-	-	83	-	85	86	-	-	-	-	-	-	93	94	95	-	103		
GPEC RCPT CONN 103 CKT TOP LVR KEY 1/103	349931001	1-BLACK	IH	PLR	LT	LA	M	R	-	-	-	-	-	-	-	-	-	-	-	-	-	-	-	-	-	-	-	-	-	SALEABLE	
									-	-	-	-	-	-	-	-	-	-	-	-	-	-	-	-	-	-	-	-	-		
									-	-	-	-	-	-	-	-	-	-	-	-	-	-	-	-	-	-	-				
									-	-	-	-	-	-	-	-	-	-	-	-	-	-	-	-	-	-	-	-	-		
									-	-	-	-	-	-	-	-	-	-	-	-	-	-	-	-	-	-	-	-	-		
GPEC RCPT CONN 103 CKT TOP LVR KEY 1/0	349931002	1-BLACK	IH	PLR	LT	LA	M	R	1	2	3	4	5	6	7	8	9	10	11	12	13	14	15	16	17	18	19	96	97	SALEABLE	
									20	21	22	23	24	25	26	27	28	29	30	31	32	33	34	35	36	37	38	98	99		
									39	40	41	42	43	44	45	46	47	48	49	50	51	52	53	54	55	56	57				
									58	59	60	61	62	63	64	65	66	67	68	69	70	71	72	73	74	75	76	100	101		
									77	78	79	80	81	82	83	84	85	86	87	88	89	90	91	92	93	94	95	102	103		
GPEC RCPT CONN 103 CKT TOP LVR KEY 1/66	349931003	1-BLACK	IH	PLR	LT	LA	M	R	1	-	-	-	5	-	-	8	-	-	-	-	-	-	-	-	17	18	-	96	-	SALEABLE	
									-	21	22	-	24	-	26	-	-	29	-	-	-	-	34	-	36	-	-	-	-		
									-	40	-	-	43	-	-	-	47	-	-	-	-	-	53	-	55	-	57				
									58	59	-	-	62	-	64	-	-	67	-	69	70	71	-	-	-	-	-	-	-		
									-	-	-	80	81	-	-	-	85	86	87	88	-	90	-	-	-	94	-	102	103		
GPEC RCPT CONN 103 CKT TOP LVR KEY 1/59	349931004	1-BLACK	IH	PLR	LT	LA	M	R	-	-	-	-	-	6	7	8	9	10	11	12	13	-	-	-	-	-	-	96	-	SALEABLE	
									-	-	-	23	-	-	-	-	-	-	-	31	-	-	-	35	-	-	-	-	-		
									39	-	-	-	43	44	45	46	47	48	-	-	-	-	-	-	-	-	57				
									58	-	60	61	62	63	64	65	-	-	68	69	-	71	-	73	74	-	-	-	-		
									77	78	-	80	81	82	83	84	85	-	87	88	-	90	91	-	-	-	-	-	-		
GPEC RCPT CONN 103 CKT TOP LVR KEY 1/44	349931005	1-BLACK	IH	PLR	LT	LA	M	R	1	2	-	-	5	-	7	8	9	-	-	-	13	-	-	16	17	18	19	96	-	SALEABLE	
									-	21	22	-	-	25	26	-	28	29	30	-	-	33	34	35	36	37	38	-	-		
									-	40	-	-	-	-	45	46	-	-	-	-	51	52	53	54	55	56	57				
									58	59	60	61	62	-	64	-	-	67	68	69	70	71	72	-	-	-	-	-	-		
									-	78	79	80	81	82	-	84	85	86	-	88	-	90	-	-	-	-	-	102	103		
GPEC RCPT CONN 103 CKT TOP LVR KEY 1/42	349931006	1-BLACK	IH	PLR	LT	LA	M	R	1	2	-	-	5	-	7	8	9	-	11	-	13	-	-	16	17	18	19	96	-	SALEABLE	
									-	21	22	-	-	25	26	-	28	29	30	-	-	33	34	35	36	37	38	-	-		
									-	40	-	-	-	-	45	46	-	-	-	-	51	52	53	54	55	56	57				
									58	59	60	61	62	-	64	-	-	67	68	69	70	71	72	-	-	-	-	-	-		
									-	78	79	80	81	82	-	84	85	86	87	88	-	90	-	-	-	-	-	102	103		

molex

GPEC IV 103 WAY RECEPTACLE SEALED ASSEMBLY MAT SEAL

BOM AND PIN OUT SHEET

ASSEMBLY DESCRIPTION	ASSEMBLY PART NUMBER	COMPONENT THE PRESENCE OF AN ABBREVIATION INDICATES THE PRESENCE OF THAT COMPONENT.							BLOCKED TERMINALS CAVITY WITH A NUMBER INDICATES BLOCKED TERMINAL POSITION CAVITY WITHOUT A NUMBER INDICATES OPEN TERMINAL POSITION																							STATUS	COMMENTS
		OUTER HOUSING KEY/COLOR	INNER HOUSING	PLR	LEVER	LEVER ARM (x/2)	MAT SEAL	RING SEAL																								
GPEC RCPT CONN 103 CKT TOP LVR KEY 1/51	349931007	1-BLACK	IH	PLR	LT	LA	M	R	1	2	-	-	5	-	7	8	9	10	-	-	13	-	-	-	17	18	-		96	-	SALEABLE	
									-	21	22	-	24	-	26	27	28	29	-	-	-	33	-	-	36	37	38		-	-		
									-	40	-	-	-	-	45	46	-	-	-	-	51	52	-	-	-	56	57					
									58	59	60	61	62	-	64	65	-	67	-	69	70	71	-	-	-	-	-		-	-		
									-	78	79	80	81	82	83	84	-	-	-	88	-	90	91	-	-	-	-		102	103		
GPEC RCPT CONN 103 CKT TOP LVR KEY 1/53	349931008	1-BLACK	IH	PLR	LT	LA	M	R	1	2	-	-	5	-	-	8	-	-	-	-	-	-	15	16	17	18	19		96	-	SALEABLE	
									20	21	22	-	24	-	26	-	-	-	30	-	-	-	34	-	36	-	38		-	-		
									-	40	-	-	-	-	-	-	-	-	-	-	-	-	53	-	55	-	-					
									-	59	60	-	62	-	64	-	66	67	68	69	70	71	72	-	74	-	-		-	-		
									-	78	79	80	81	82	-	84	85	86	87	88	89	90	91	-	93	-	-		102	103		
GPEC RCPT CONN 103 CKT TOP LVR KEY 1/54	349931009	1-BLACK	IH	PLR	LT	LA	M	R	1	2	-	-	5	-	-	8	-	-	-	-	-	-	15	16	17	18	19		96	-	SALEABLE	
									20	21	22	-	24	-	26	-	-	-	30	-	-	-	34	-	36	-	38		-	-		
									-	40	-	-	-	-	-	-	-	-	-	-	-	-	53	-	55	-	-					
									-	-	60	-	62	-	64	-	66	67	68	69	70	71	72	-	74	-	-		-	-		
									-	78	79	80	81	82	-	84	85	86	87	88	89	90	91	-	93	-	-		102	103		
GPEC RCPT CONN 103 CKT TOP LVR KEY 1/54	349931010	1-BLACK	IH	PLR	LT	LA	M	R	1	2	-	-	5	-	-	8	-	-	-	-	-	-	15	16	17	18	19		96	-	SALEABLE	
									20	21	22	-	24	-	26	-	-	-	-	-	-	-	34	-	36	-	38		-	-		
									-	40	-	-	-	-	-	-	-	-	-	-	-	-	53	-	55	-	-					
									-	59	60	-	62	-	64	-	66	67	68	69	70	71	72	-	74	-	-		-	-		
									-	78	79	80	81	82	-	84	85	86	87	88	89	90	91	-	93	-	-		102	103		
GPEC RCPT CONN 103 CKT TOP LVR KEY 1/46	349931011	1-BLACK	IH	PLR	LT	LA	M	R	1	2	-	-	5	-	7	8	9	-	-	-	-	-	15	16	17	18	19		96	-	SALEABLE	
									20	21	22	-	24	25	26	-	-	-	-	-	-	33	34	-	36	-	38		-	-		
									-	40	-	-	-	44	-	46	-	-	-	-	51	52	53	-	55	-	-					
									-	59	60	61	62	-	64	-	66	67	68	69	70	71	72	-	74	-	-		-	-		
									-	78	79	80	81	82	-	84	85	86	87	88	89	90	91	-	-	-	-		102	103		
GPEC RCPT CONN 103 CKT TOP LVR KEY 1/54	349931012	1-BLACK	IH	PLR	LT	LA	M	R	1	2	-	-	5	-	7	8	9	-	-	-	-	-	-	-	17	18	-		96	-	SALEABLE	
									-	21	22	-	24	25	26	-	-	-	-	-	-	33	34	-	36	-	38		-	-		
									-	40	-	-	-	-	-	46	-	-	-	-	51	52	53	-	55	-	-					
									-	59	60	61	62	-	64	-	66	67	68	69	70	71	-	-	-	-	-		-	-		
									-	78	79	80	81	82	-	84	85	86	-	88	89	90	91	-	-	-	-		102	103		
GPEC RCPT CONN 103 CKT TOP LVR KEY 1/45	349931013	1-BLACK	IH	PLR	LT	LA	M	R	1	2	-	-	5	-	7	8	9	-	-	-	-	-	15	16	17	18	19		96	-	SALEABLE	
									20	21	22	-	24	25	26	-	-	-	30	-	-	33	34	-	36	-	38		-	-		
									-	40	-	-	-	44	-	46	-	-	-	-	51	52	53	-	55	-	-					
									-	59	60	61	62	-	64	-	66	67	68	69	70	71	72	-	74	-	-		-	-		
									-	78	79	80	81	82	-	84	85	86	87	88	89	90	91	-	-	-	-		102	103		
GPEC RCPT CONN 103 CKT TOP LVR KEY 1/54	349931014	1-BLACK	IH	PLR	LT	LA	M	R	1	2	-	-	-	-	7	8	9	-	-	-	-	-	15	-	-	-	-		96	-	SALEABLE	
									-	21	22	-	24	25	-	-	28	29	-	-	-	33	34	-	36	-	38		-	-		
									-	40	-	-	-	44	-	46	47	-	-	-	51	52	53	-	55	-	57					
									58	59	-	61	62	-	64	-	66	67	68	69	70	71	-	73	-	-	-		-	-		
									-	78	79	80	-	-	-	84	85	-	87	88	-	90	-	92	-	-	-		102	103		
GPEC RCPT CONN 103 CKT TOP LVR KEY 1/45	349931015	1-BLACK	IH	PLR	LT	LA	M	R	1	2	-	-	5	-	7	8	9	-	-	-	-	-	15	-	17	18	-		96	-	SALEABLE	
									-	21	22	-	24	25	26	-	28	29	-	-	32	33	34	-	36	-	38		-	-		
									-	40	-	-	43	44	-	46	47	-	-	-	51	52	53	-	55	-	57					
									58	59	-	61	62	-	64	-	66	67	68	69	70	71	-	73	74	-	-		-	-		
									-	78	79	80	81	-	-	84	85	86	87	88	-	90	-	92	-	-	-		102	103		
GPEC RCPT CONN 103 CKT TOP LVR KEY 1/52	349931016	1-BLACK	IH	PLR	LT	LA	M	R	1	2	-	-	5	-	-	8	-	-	-	-	-	-	15	-	17	18	-		96	-	SALEABLE	
									-	21	22	-	24	-	26	-	28	29	-	-	32	-	34	-	36	-	38		-	-		
									-	40	-	-	43	-	-	-	47	-	-	-	-	-	53	-	55	-	57					
									58	-	-	-	62	-	64	-	66	67	68	69	70	71	72	73	74	75	-		-	-		
									-	78	79	80	81	-	-	84	85	86	87	88	-	90	91	92	-	-	-		102	103		

molex

GPEC IV 103 WAY RECEPTACLE SEALED ASSEMBLY MAT SEAL

BOM AND PIN OUT SHEET

ASSEMBLY DESCRIPTION	ASSEMBLY PART NUMBER	COMPONENT THE PRESENCE OF AN ABBREVIATION INDICATES THE PRESENCE OF THAT COMPONENT.							BLOCKED TERMINALS CAVITY WITH A NUMBER INDICATES BLOCKED TERMINAL POSITION CAVITY WITHOUT A NUMBER INDICATES OPEN TERMINAL POSITION																						STATUS	COMMENTS
		OUTER HOUSING KEY/COLOR	INNER HOUSING	PLR	LEVER	LEVER ARM (x/2)	MAT SEAL	RING SEAL																							
GPEC RCPT CONN 103 CKT TOP LVR KEY 1/58	349931017	1-BLACK	IH	PLR	LT	LA	M	R	1	2	-	-	-	-	7	8	9	-	-	-	-	-	15	-	-	-	-		96	-	SALEABLE	
									-	21	22	-	24	25	-	-	28	29	-	-	-	33	34	-	-	-	38		-	-		
									-	40	-	-	-	44	-	46	47	-	-	-	51	52	53	-	-	-	57					
									58	59	-	61	62	-	64	-	66	67	68	69	70	71	-	-	-	-	-		-	-		
									-	78	79	80	-	-	-	84	85	-	87	88	-	90	-	-	-	-	-		102	103		
GPEC RCPT CONN 103 CKT TOP LVR KEY 1/49	349931018	1-BLACK	IH	PLR	LT	LA	M	R	1	2	-	-	5	-	7	8	9	-	-	-	-	-	15	-	17	18	-		96	-	SALEABLE	
									-	21	22	-	24	25	26	-	28	29	-	-	32	33	34	-	-	-	38		-	-		
									-	40	-	-	43	44	-	46	47	-	-	-	51	52	53	-	-	-	57					
									58	59	-	61	62	-	64	-	66	67	68	69	70	71	-	-	74	-	-		-	-		
									-	78	79	80	81	-	-	84	85	86	87	88	-	90	-	-	-	-	-		102	103		
GPEC RCPT CONN 103 CKT TOP LVR KEY 1/56	349931019	1-BLACK	IH	PLR	LT	LA	M	R	1	2	-	-	5	-	-	8	-	-	-	-	-	-	15	-	17	18	-		96	-	SALEABLE	
									-	21	22	-	24	-	26	-	28	29	-	-	32	-	34	-	-	-	38		-	-		
									-	40	-	-	43	-	-	-	47	-	-	-	-	-	53	-	-	-	57					
									58	-	-	-	62	-	64	-	66	67	68	69	70	71	72	-	74	75	-		-	-		
									-	78	79	80	81	-	-	84	85	86	87	88	-	90	91	-	-	-	-		102	103		
GPEC RCPT CONN 103 CKT TOP LVR KEY 1/44	349931020	1-BLACK	IH	PLR	LT	LA	M	R	1	2	-	-	-	-	7	8	9	-	-	-	13	-	15	-	17	18	-		96	-	SALEABLE	
									-	21	22	-	24	25	26	-	28	29	-	-	-	33	34	35	36	37	38		-	-		
									-	40	-	-	-	44	45	46	47	-	-	-	51	52	53	54	55	56	57					
									58	59	60	61	62	-	64	-	-	67	-	69	70	71	-	73	-	-	-		-	-		
									-	-	79	80	81	82	-	84	85	86	87	88	-	90	-	92	-	-	-		102	103		
GPEC RCPT CONN 103 CKT TOP LVR KEY 1/41	349931021	1-BLACK	IH	PLR	LT	LA	M	R	1	2	-	-	5	-	7	8	9	-	11	-	13	-	15	-	17	18	-		96	-	SALEABLE	
									-	21	22	-	24	25	26	-	28	29	-	-	-	33	34	35	36	37	38		-	-		
									-	40	-	-	43	44	45	46	47	-	-	-	51	52	53	54	55	56	57					
									58	59	60	61	62	-	64	-	-	67	-	69	70	71	-	73	-	-	-		-	-		
									-	-	79	80	81	82	-	84	85	86	87	88	-	90	-	92	-	-	-		102	103		
GPEC RCPT CONN 103 CKT TOP LVR KEY 1/47	349931022	1-BLACK	IH	PLR	LT	LA	M	R	1	2	-	-	-	-	7	8	9	-	-	-	13	-	15	-	17	18	-		96	-	SALEABLE	
									-	21	22	-	24	25	26	-	-	29	-	-	-	33	34	35	-	37	38		-	-		
									-	40	-	-	-	44	45	46	47	-	-	-	51	52	53	54	-	56	57					
									58	59	60	61	62	-	64	-	-	67	-	69	70	71	-	73	-	-	-		-	-		
									-	-	79	80	81	82	-	84	85	86	87	88	-	90	-	92	-	-	-		102	103		
GPEC RCPT CONN 103 CKT TOP LVR KEY 1/44	349931023	1-BLACK	IH	PLR	LT	LA	M	R	1	2	-	-	5	-	7	8	9	-	11	-	13	-	15	-	17	18	-		96	-	SALEABLE	
									-	21	22	-	24	25	26	-	-	29	-	-	-	33	34	35	-	37	38		-	-		
									-	40	-	-	43	44	45	46	47	-	-	-	51	52	53	54	-	56	57					
									58	59	60	61	62	-	64	-	-	67	-	69	70	71	-	73	-	-	-		-	-		
									-	-	79	80	81	82	-	84	85	86	87	88	-	90	-	92	-	-	-		102	103		
GPEC RCPT CONN 103 CKT TOP LVR KEY 1/47	349931024	1-BLACK	IH	PLR	LT	LA	M	R	1	2	-	-	-	6	7	8	9	10	-	-	13	-	15	-	17	18	-		96	-	SALEABLE	
									-	21	22	-	24	25	26	27	28	29	-	-	-	33	34	-	36	-	38		-	-		
									-	40	-	-	-	44	45	46	47	-	-	-	51	52	53	-	55	56	57					
									58	59	-	61	62	-	64	65	-	67	-	-	70	71	-	73	-	-	-		-	-		
									-	-	79	80	-	82	83	-	85	86	87	-	-	90	-	92	-	-	-		102	103		
GPEC RCPT CONN 103 CKT TOP LVR KEY 1/50	349931025	1-BLACK	IH	PLR	LT	LA	M	R	1	2	-	-	-	6	7	8	9	10	-	-	13	-	15	-	17	18	-		96	-	SALEABLE	
									-	21	22	-	24	25	26	27	-	29	-	-	-	33	34	-	-	-	38		-	-		
									-	40	-	-	-	44	45	46	47	-	-	-	51	52	53	-	-	56	57					
									58	59	-	61	62	-	64	65	-	67	-	-	70	71	-	73	-	-	-		-	-		
									-	-	79	80	-	82	83	-	85	86	87	-	-	90	-	92	-	-	-		102	103		
GPEC RCPT CONN 103 CKT TOP LVR KEY 1/49	349931026	1-BLACK	IH	PLR	LT	LA	M	R	1	-	-	-	-	6	7	8	9	10	-	-	13	-	-	-	17	-	-		96	-	SALEABLE	
									-	21	22	-	24	25	26	27	28	29	-	-	-	33	34	-	36	-	38		-	-		
									-	40	-	-	-	44	45	46	47	-	-	-	51	52	53	-	55	56	57					
									58	59	-	61	62	-	64	65	-	67	-	-	70	71	-	73	-	-	-		-	-		
									-	-	79	80	-	82	83	-	85	86	87	-	-	90	-	92	-	94	-		102	103		

molex

GPEC IV 103 WAY RECEPTACLE SEALED ASSEMBLY MAT SEAL

BOM AND PIN OUT SHEET

ASSEMBLY DESCRIPTION	ASSEMBLY PART NUMBER	COMPONENT THE PRESENCE OF AN ABBREVIATION INDICATES THE PRESENCE OF THAT COMPONENT.							BLOCKED TERMINALS CAVITY WITH A NUMBER INDICATES BLOCKED TERMINAL POSITION CAVITY WITHOUT A NUMBER INDICATES OPEN TERMINAL POSITION																						STATUS	COMMENTS
		OUTER HOUSING KEY/COLOR	INNER HOUSING	PLR	LEVER	LEVER ARM (x/2)	MAT SEAL	RING SEAL																							
GPEC RCPT CONN 103 CKT TOP LVR KEY 1/37	349931027	1-BLACK	IH	PLR	LT	LA	M	R	1	2	-	-	5	-	7	8	9	-	11	-	13	-	15	-	17	18	-		96	-	SALEABLE	
									-	21	22	-	24	25	26	-	28	29	-	-	32	33	34	35	36	37	-		-	-		
									-	40	-	-	43	44	45	46	47	48	-	-	51	52	53	54	55	56	57					
									58	59	60	61	62	-	64	65	66	67	-	69	70	71	-	73	74	-	-		-	-		
									-	-	-	-	81	82	-	84	85	86	87	88	89	90	-	92	-	94	-		102	103		
GPEC RCPT CONN 103 CKT TOP LVR KEY 1/55	349931028	1-BLACK	IH	PLR	LT	LA	M	R	1	-	-	-	5	-	-	8	-	-	-	-	-	-	-	-	17	18	-		96	-	SALEABLE	
									-	21	22	-	24	-	26	-	-	29	-	-	32	-	34	-	36	-	38		-	-		
									-	40	-	-	43	-	-	-	47	-	-	-	-	-	53	-	55	-	57					
									58	59	-	-	62	-	64	-	66	67	68	69	70	71	72	73	74	75	-		-	-		
									-	78	79	80	81	-	-	-	85	86	87	88	-	90	91	92	-	-	-		102	103		
GPEC RCPT CONN 103 CKT TOP LVR KEY 1/49	349931029	1-BLACK	IH	PLR	LT	LA	M	R	1	-	-	-	5	-	7	8	9	-	-	-	-	-	-	-	17	18	-		96	-	SALEABLE	
									-	21	22	-	24	25	26	-	-	29	-	-	32	33	34	-	36	-	38		-	-		
									-	40	-	-	43	44	-	46	47	-	-	-	51	52	53	-	55	-	57					
									58	59	-	61	62	-	64	-	66	67	68	69	70	71	-	73	74	-	-		-	-		
									-	78	79	80	81	-	-	-	85	86	87	88	-	90	-	92	-	-	-		102	103		
GPEC RCPT CONN 103 CKT TOP LVR KEY 1/51	349931030	1-BLACK	IH	PLR	LT	LA	M	R	1	2	-	-	5	-	-	8	-	-	-	-	-	-	15	-	17	18	-		96	-	SALEABLE	
									-	21	22	-	24	-	26	-	28	29	-	-	32	-	34	-	36	-	38		-	-		
									-	40	-	-	43	-	-	-	47	-	-	-	-	-	53	-	55	-	57					
									58	59	-	-	62	-	64	-	66	67	68	69	70	71	72	73	74	75	-		-	-		
									-	78	79	80	81	-	-	84	85	86	87	88	-	90	91	92	-	-	-		102	103		
GPEC RCPT CONN 103 CKT TOP LVR KEY 1/55	349931031	1-BLACK	IH	PLR	LT	LA	M	R	1	2	-	-	5	-	-	8	-	-	-	-	-	-	15	-	17	18	-		96	-	SALEABLE	
									-	21	22	-	24	-	26	-	28	29	-	-	32	-	34	-	-	-	38		-	-		
									-	40	-	-	43	-	-	-	47	-	-	-	-	-	53	-	-	-	57					
									58	59	-	-	62	-	64	-	66	67	68	69	70	71	72	-	74	75	-		-	-		
									-	78	79	80	81	-	-	84	85	86	87	88	-	90	91	-	-	-	-		102	103		
GPEC RCPT CONN 103 CKT TOP LVR KEY 1/59	349931032	1-BLACK	IH	PLR	LT	LA	M	R	1	-	-	-	5	-	-	8	-	-	-	-	-	-	-	-	17	18	-		96	-	SALEABLE	
									-	21	22	-	24	-	26	-	-	29	-	-	32	-	34	-	-	-	38		-	-		
									-	40	-	-	43	-	-	-	47	-	-	-	-	-	53	-	-	-	57					
									58	59	-	-	62	-	64	-	66	67	68	69	70	71	72	-	74	75	-		-	-		
									-	78	79	80	81	-	-	-	85	86	87	88	-	90	91	-	-	-	-		102	103		
GPEC RCPT CONN 103 CKT TOP LVR KEY 1/53	349931033	1-BLACK	IH	PLR	LT	LA	M	R	1	-	-	-	5	-	7	8	9	-	-	-	-	-	-	-	17	18	-		96	-	SALEABLE	
									-	21	22	-	24	25	26	-	-	29	-	-	32	33	34	-	-	-	38		-	-		
									-	40	-	-	43	44	-	46	47	-	-	-	51	52	53	-	-	-	57					
									58	59	-	61	62	-	64	-	66	67	68	69	70	71	-	-	74	-	-		-	-		
									-	78	79	80	81	-	-	-	85	86	87	88	-	90	-	-	-	-	-		102	103		
GPEC RCPT CONN 103 CKT TOP LVR KEY 1/57	349931034	1-BLACK	IH	PLR	LT	LA	M	R	-	-	-	-	-	6	7	8	9	10	11	12	-	-	-	-	-	-	-		96	-	SALEABLE	
									-	21	22	-	-	-	-	27	-	29	-	-	-	-	-	-	-	-	-		98	-		
									-	-	41	42	43	44	45	46	47	48	49	50	51	52	-	-	-	-	57					
									-	59	-	-	-	-	64	65	-	67	68	69	-	-	72	73	74	75	76		-	101		
									-	78	-	80	-	-	-	84	85	-	-	-	-	-	-	-	93	94	95		-	103		
GPEC RCPT CONN 103 CKT TOP LVR KEY 1/58	349931035	1-BLACK	IH	PLR	LT	LA	M	R	-	-	-	-	-	6	7	8	9	10	11	-	-	-	-	-	-	-	-		96	-	SALEABLE	
									-	21	22	-	-	-	-	27	-	29	-	-	-	-	-	-	-	-	-		98	-		
									-	-	41	42	43	44	45	46	47	48	49	50	51	52	-	-	-	-	57					
									-	59	-	-	-	-	64	65	-	67	68	69	-	-	72	73	74	75	76		-	101		
									-	78	-	80	-	-	-	84	85	-	-	-	-	-	-	-	93	94	95		-	103		
GPEC RCPT CONN 103 CKT TOP LVR KEY 1/48	349931036	1-BLACK	IH	PLR	LT	LA	M	R	1	-	-	-	5	6	7	8	9	10	11	-	13	-	-	-	17	-	-		96	-	SALEABLE	
									-	21	22	-	24	25	26	27	28	29	-	-	-	33	34	-	36	-	38		-	-		
									-	40	-	-	43	44	45	46	47	-	-	-	51	52	53	-	55	56	57					
									58	59	-	61	-	-	64	65	-	67	-	-	70	71	-	73	-	-	-		-	-		
									-	-	79	80	-	82	83	-	85	86	87	-	-	90	-	92	-	-	-		102	103		

molex

GPEC IV 103 WAY RECEPTACLE SEALED ASSEMBLY MAT SEAL

BOM AND PIN OUT SHEET

ASSEMBLY DESCRIPTION	ASSEMBLY PART NUMBER	COMPONENT THE PRESENCE OF AN ABBREVIATION INDICATES THE PRESENCE OF THAT COMPONENT.							BLOCKED TERMINALS CAVITY WITH A NUMBER INDICATES BLOCKED TERMINAL POSITION CAVITY WITHOUT A NUMBER INDICATES OPEN TERMINAL POSITION																						STATUS	COMMENTS
		OUTER HOUSING KEY/COLOR	INNER HOUSING	PLR	LEVER	LEVER ARM (x/2)	MAT SEAL	RING SEAL																							
GPEC RCPT CONN 103 CKT TOP LVR KEY 1/51	349931037	1-BLACK	IH	PLR	LT	LA	M	R	1	-	-	-	5	6	7	8	9	10	11	-	13	-	-	-	17	-	-		96	-	SALEABLE	
									-	21	22	-	24	25	26	27	-	29	-	-	-	33	34	-	-	-	38		-	-		
									-	40	-	-	43	44	45	46	47	-	-	-	51	52	53	-	-	56	57				
									58	59	-	61	-	-	64	65	-	67	-	-	70	71	-	73	-	-	-		-	-		
									-	-	79	80	-	82	83	-	85	86	87	-	-	90	-	92	-	-	-		102	103		
GPEC RCPT CONN 103 CKT TOP LVR KEY 1/45	349931038	1-BLACK	IH	PLR	LT	LA	M	R	1	2	-	-	5	6	7	8	9	10	11	-	13	-	15	-	17	18	-		96	-	SALEABLE	
									-	21	22	-	24	25	26	27	28	29	-	-	-	33	34	-	36	-	38		-	-		
									-	40	-	-	43	44	45	46	47	-	-	-	51	52	53	-	55	56	57				
									58	59	-	61	-	-	64	65	-	67	-	-	70	71	-	73	-	-	-		-	-		
									-	-	79	80	-	82	83	-	85	86	87	-	-	90	-	92	-	-	-		102	103		
GPEC RCPT CONN 103 CKT TOP LVR KEY 1/48	349931039	1-BLACK	IH	PLR	LT	LA	M	R	1	2	-	-	5	6	7	8	9	10	11	-	13	-	15	-	17	18	-		96	-	SALEABLE	
									-	21	22	-	24	25	26	27	-	29	-	-	-	33	34	-	-	-	38		-	-		
									-	40	-	-	43	44	45	46	47	-	-	-	51	52	53	-	-	56	57				
									58	59	-	61	-	-	64	65	-	67	-	-	70	71	-	73	-	-	-		-	-		
									-	-	79	80	-	82	83	-	85	86	87	-	-	90	-	92	-	-	-		102	103		
GPEC RCPT CONN 103 CKT TOP LVR KEY 1/46	349931040	1-BLACK	IH	PLR	LT	LA	M	R	-	-	-	4	5	6	7	8	9	10	11	12	-	-	15	-	-	-	-		96	-	SALEABLE	
									-	21	22	23	-	-	-	27	-	29	30	31	-	33	-	35	-	-	-		98	-		
									-	-	41	42	43	44	45	46	47	48	49	50	51	52	-	-	-	-	57				
									-	59	-	61	-	-	-	65	-	67	68	-	70	-	72	73	74	75	76		100	101		
									-	78	-	80	-	82	-	84	85	-	-	-	-	-	-	-	93	94	95		102	103		
GPEC RCPT CONN 103 CKT TOP LVR KEY 1/50	349931041	1-BLACK	IH	PLR	LT	LA	M	R	-	-	-	-	-	6	7	8	9	10	11	12	-	-	15	-	-	-	-		96	-	SALEABLE	
									-	21	22	23	-	-	-	27	-	29	-	-	-	33	-	-	-	-	-		98	-		
									-	-	41	42	43	44	45	46	47	48	49	50	51	52	-	-	-	-	57				
									-	59	-	-	-	-	64	65	66	67	68	69	-	-	72	73	74	75	76		-	101		
									77	78	79	80	-	-	-	84	85	86	-	-	-	-	-	-	93	94	95		-	103		
GPEC RCPT CONN 103 CKT TOP LVR KEY 1/47	349931042	1-BLACK	IH	PLR	LT	LA	M	R	1	2	-	-	-	-	7	8	9	-	-	-	-	-	15	-	17	18	-		96	-	SALEABLE	
									-	21	22	-	24	25	-	-	28	29	-	-	32	33	34	-	36	-	38		-	-		
									-	40	-	-	43	44	-	46	47	-	-	-	51	52	53	-	55	-	57				
									58	59	-	61	62	-	64	-	66	67	68	69	70	71	-	73	74	-	-		-	-		
									-	78	79	80	81	-	-	84	85	86	87	88	-	90	-	92	-	-	-		102	103		
GPEC RCPT CONN 103 CKT TOP LVR KEY 1/51	349931043	1-BLACK	IH	PLR	LT	LA	M	R	1	2	-	-	-	-	7	8	9	-	-	-	-	-	15	-	17	18	-		96	-	SALEABLE	
									-	21	22	-	24	25	-	-	28	29	-	-	32	33	34	-	-	-	38		-	-		
									-	40	-	-	43	44	-	46	47	-	-	-	51	52	53	-	-	-	57				
									58	59	-	61	62	-	64	-	66	67	68	69	70	71	-	-	74	-	-		-	-		
									-	78	79	80	81	-	-	84	85	86	87	88	-	90	-	-	-	-	-		102	103		
GPEC RCPT CONN 103 CKT TOP LVR KEY 1/44	349931044	1-BLACK	IH	PLR	LT	LA	M	R	-	2	3	-	5	6	7	8	9	-	11	-	13	14	15	-	17	18	-		-	-	SALEABLE	
									-	-	22	-	-	25	-	-	-	29	-	-	-	33	34	35	-	37	38		-	-		
									-	-	41	-	43	44	45	46	47	-	-	-	51	52	53	54	-	56	57				
									-	59	60	61	62	-	64	65	-	67	-	69	70	71	72	73	-	-	-		-	-		
									-	-	79	80	81	-	83	84	85	86	87	-	-	90	91	92	-	94	-		102	103		
GPEC RCPT CONN 103 CKT TOP LVR KEY 1/69	349931045	1-BLACK	IH	PLR	LT	LA	M	R	-	-	-	-	5	6	7	-	9	-	11	-	13	-	-	-	-	-	-		-	-	SALEABLE	
									-	-	22	-	-	25	-	-	-	29	-	-	-	33	34	-	-	-	38		-	-		
									-	-	-	-	43	44	45	46	47	-	-	-	51	52	53	-	-	56	57				
									-	59	-	61	-	-	64	65	-	-	-	-	-	71	-	73	-	-	-		-	-		
									-	-	79	80	-	-	-	-	85	-	-	-	-	-	-	92	-	-	-		102	103		
GPEC RCPT CONN 103 CKT TOP LVR KEY 1/44	349931046	1-BLACK	IH	PLR	LT	LA	M	R	1	2	-	-	5	-	7	8	9	-	11	-	13	-	15	-	17	18	-		-	-	SALEABLE	
									-	21	22	-	24	25	26	-	-	29	-	-	-	33	34	35	-	37	38		-	-		
									-	40	-	-	43	44	45	46	47	-	-	-	51	52	53	54	-	56	57				
									58	59	60	61	62	-	64	65	-	67	-	69	70	71	-	73	-	-	-		-	-		
									-	-	79	80	81	82	-	84	85	86	87	88	-	90	-	92	-	-	-		102	103		

molex

GPEC IV 103 WAY RECEPTACLE SEALED ASSEMBLY MAT SEAL

BOM AND PIN OUT SHEET

ASSEMBLY DESCRIPTION	ASSEMBLY PART NUMBER	COMPONENT THE PRESENCE OF AN ABBREVIATION INDICATES THE PRESENCE OF THAT COMPONENT.							BLOCKED TERMINALS CAVITY WITH A NUMBER INDICATES BLOCKED TERMINAL POSITION CAVITY WITHOUT A NUMBER INDICATES OPEN TERMINAL POSITION																						STATUS	COMMENTS
		OUTER HOUSING KEY/COLOR	INNER HOUSING	PLR	LEVER	LEVER ARM (x/2)	MAT SEAL	RING SEAL																							
GPEC RCPT CONN 103 CKT TOP LVR KEY 1/55	349931047	1-BLACK	IH	PLR	LT	LA	M	R	-	-	-	-	-	6	-	8	9	10	11	12	13	-	-	-	-	-	-	96	-	SALEABLE	
									-	-	-	-	-	-	-	-	28	-	-	31	-	-	-	35	-	-	-	98	-		
									39	40	41	42	43	44	45	46	47	48	-	-	-	-	-	-	-	-	57				
									58	59	60	-	62	63	64	65	-	67	68	-	-	-	72	73	74	-	-	-	-		
									77	78	79	80	81	82	83	84	85	86	87	-	-	90	-	-	93	-	-	-	-		
GPEC RCPT CONN 103 CKT TOP LVR KEY 1/101	349931048	1-BLACK	IH	PLR	LT	LA	M	R	-	-	-	-	-	-	-	-	-	-	-	-	-	-	-	-	-	-	-	-	-	SALEABLE	
									-	-	-	-	-	-	-	-	-	-	-	-	-	-	-	-	-	-	-	-	-		
									-	-	41	-	-	-	-	-	-	-	-	-	-	-	-	-	-	-	-				
									-	59	-	-	-	-	-	-	-	-	-	-	-	-	-	-	-	-	-	-	-		
									-	-	-	-	-	-	-	-	-	-	-	-	-	-	-	-	-	-	-	-	-		
GPEC RCPT CONN 103 CKT TOP LVR KEY 1/67	349931049	1-BLACK	IH	PLR	LT	LA	M	R	-	-	-	-	5	6	7	8	9	-	11	-	13	-	-	-	-	-	-	-	-	SALEABLE	
									-	-	22	-	-	25	-	-	-	29	-	-	-	33	34	-	-	-	38	-	-		
									-	-	-	-	43	44	45	46	47	-	-	-	51	52	53	-	-	56	57				
									-	59	-	61	-	-	64	65	-	67	-	-	-	71	-	73	-	-	-	-	-		
									-	-	79	80	-	-	-	-	85	-	-	-	-	-	-	92	-	-	-	102	103		
GPEC RCPT CONN 103 CKT TOP LVR KEY 1/68	349931050	1-BLACK	IH	PLR	LT	LA	M	R	-	-	-	-	5	6	7	8	9	-	11	-	13	-	-	-	-	-	-	-	-	SALEABLE	
									-	-	22	-	-	25	-	-	-	29	-	-	-	33	34	-	-	-	38	-	-		
									-	-	-	-	43	44	45	46	47	-	-	-	51	52	53	-	-	56	57				
									-	59	-	61	-	-	64	65	-	-	-	-	-	71	-	73	-	-	-	-	-		
									-	-	79	80	-	-	-	-	85	-	-	-	-	-	-	92	-	-	-	102	103		
GPEC RCPT CONN 103 CKT TOP LVR KEY 1/54	349931051	1-BLACK	IH	PLR	LT	LA	M	R	-	-	-	-	-	6	7	8	9	10	-	12	-	-	-	-	-	-	-	96	-	SALEABLE	
									-	21	22	23	-	-	-	27	-	29	-	-	-	-	-	-	-	-	-	98	-		
									-	-	41	42	43	44	45	46	47	48	49	50	51	52	-	-	-	-	57				
									-	59	-	-	-	-	64	65	-	67	68	69	-	-	72	73	74	75	76	-	101		
									77	78	79	80	-	-	-	84	85	86	-	-	-	-	-	-	93	94	95	-	103		
GPEC RCPT CONN 103 CKT TOP LVR KEY 1/102	349931052	1-BLACK	IH	PLR	LT	LA	M	R	-	-	-	-	-	-	-	-	-	-	-	-	-	-	-	-	-	-	-	-	-	SALEABLE	
									-	-	-	-	-	-	-	-	-	-	-	-	-	-	-	-	-	-	-	-	-		
									-	-	-	-	-	-	-	-	-	-	-	-	-	-	-	-	-	-	-	-	-		
									-	-	-	-	-	-	-	-	-	-	-	-	-	-	-	-	-	-	-	-	-		
									-	-	-	-	-	-	-	-	-	-	-	-	-	-	-	-	-	-	95	-	-		
GPEC RCPT CONN 103 CKT TOP LVR KEY 1/102	349931053	1-BLACK	IH	PLR	LT	LA	M	R	-	-	-	-	-	-	-	-	-	-	-	-	-	-	-	-	-	-	-	-	-	SALEABLE	
									-	-	-	-	-	-	-	-	-	-	-	-	-	-	-	-	-	-	-	-	-		
									-	-	-	-	-	-	-	-	-	-	-	-	-	-	-	-	-	-	-	-	-		
									-	-	-	-	-	-	-	-	-	-	-	-	-	-	-	-	-	-	-	-	-		
									-	-	-	-	-	-	-	-	-	-	-	-	-	-	-	92	-	-	-	-	-		
GPEC RCPT CONN 103 CKT TOP LVR KEY 1/54	349931054	1-BLACK	IH	PLR	LT	LA	M	R	-	-	-	4	5	6	-	8	9	10	-	12	13	-	-	-	-	-	-	96	-	SALEABLE	
									-	21	-	-	-	-	26	-	28	-	30	31	-	-	-	35	-	-	-	98	-		
									39	40	41	42	43	44	45	46	47	48	-	-	-	-	-	-	-	-	57				
									58	59	60	61	62	63	64	65	66	67	68	-	-	71	72	73	74	-	-	100	-		
									77	78	-	-	-	-	-	-	-	-	87	-	-	90	-	-	93	-	-	102	-		
GPEC RCPT CONN 103 CKT TOP LVR KEY 1/57	349931055	1-BLACK	IH	PLR	LT	LA	M	R	-	-	-	4	5	6	-	-	9	10	-	12	13	-	-	-	-	-	-	96	-	SALEABLE	
									-	21	-	-	-	-	26	-	28	-	30	31	-	-	-	35	-	-	-	98	-		
									39	40	41	42	43	44	45	46	47	48	-	-	-	-	-	-	-	-	57				
									58	59	60	61	62	63	64	65	66	67	68	-	-	71	72	73	74	-	-	100	-		
									77	78	-	-	-	-	-	-	-	-	-	-	-	90	-	-	-	-	-	102	-		
GPEC RCPT CONN 103 CKT TOP LVR KEY 1/83	349931056	1-BLACK	IH	PLR	LT	LA	M	R	-	-	-	-	-	-	-	8	9	-	-	-	13	-	-	-	-	-	-	-	-	SALEABLE	
									-	-	-	-	-	-	-	-	-	-	-	-	-	-	-	-	-	-	-	-	-		
									-	-	41	42	43	-	-	-	-	-	-	-	-	-	-	-	-	-	57				
									-	59	60	-	62	63	64	-	-	-	-	-	-	-	72	-	-	-	-	-	-		
									-	-	79	80	81	82	83	84	85	-	-	-	-	-	-	-	-	-	-	-	-		

molex

GPEC IV 103 WAY RECEPTACLE SEALED ASSEMBLY MAT SEAL

BOM AND PIN OUT SHEET

ASSEMBLY DESCRIPTION	ASSEMBLY PART NUMBER	COMPONENT THE PRESENCE OF AN ABBREVIATION INDICATES THE PRESENCE OF THAT COMPONENT.							BLOCKED TERMINALS CAVITY WITH A NUMBER INDICATES BLOCKED TERMINAL POSITION CAVITY WITHOUT A NUMBER INDICATES OPEN TERMINAL POSITION																						STATUS	COMMENTS
		OUTER HOUSING KEY/COLOR	INNER HOUSING	PLR	LEVER	LEVER ARM (x/2)	MAT SEAL	RING SEAL																							
GPEC RCPT CONN 103 CKT TOP LVR KEY 1/74	349931057	1-BLACK	IH	PLR	LT	LA	M	R	-	-	-	4	5	6	-	8	-	10	11	12	13	-	-	-	-	-	-		-	-	SALEABLE	
									-	-	-	-	-	-	-	-	-	29	-	-	-	-	-	-	-	-	-		-	-		
									-	-	41	42	43	-	-	-	-	-	-	-	-	-	-	-	-	57					
									-	59	60	-	62	63	64	-	-	-	-	-	-	-	72	-	-	-	-	100	-		
									-	78	79	80	81	82	83	84	85	-	-	-	-	-	-	-	-	-	-	102	-		
GPEC RCPT CONN 103 CKT TOP LVR KEY 1/54	349931058	1-BLACK	IH	PLR	LT	LA	M	R	-	-	-	-	-	6	7	8	9	10	11	12	-	-	-	-	-	-	-	96	-		
									-	21	22	23	-	-	-	27	-	29	-	-	-	-	-	-	-	-	98	-			
									-	-	41	42	43	44	45	46	47	48	49	50	51	52	-	-	-	-	57				
									-	59	-	-	-	-	64	65	-	67	68	69	-	-	72	-	74	75	76	-	101		
									77	78	79	80	-	-	83	-	85	86	-	-	-	-	-	-	93	94	95	-	103		
GPEC RCPT CONN 103 CKT TOP LVR KEY 1/51	349931059	1-BLACK	IH	PLR	LT	LA	M	R	-	-	-	-	-	6	7	8	9	10	11	12	-	-	15	-	-	-	-	96	-		
									-	21	22	23	-	-	-	27	-	29	-	-	-	-	-	-	-	-	38	98	-		
									-	-	41	42	43	44	45	46	47	48	49	50	51	52	-	-	-	-	57				
									-	59	-	-	-	-	64	65	66	67	68	69	-	-	72	-	74	75	76	-	101		
									77	78	79	80	-	-	83	-	85	86	-	-	-	-	-	-	93	94	95	-	103		
GPEC RCPT CONN 103 CKT TOP LVR KEY 1/78	349931060	1-BLACK	IH	PLR	LT	LA	M	R	-	-	-	4	5	-	-	8	-	-	-	12	13	-	-	-	-	-	-		-	-	SALEABLE	
									-	-	-	-	-	-	-	-	-	29	-	-	-	-	-	-	-	-	-		-	-		
									-	-	41	42	43	-	-	-	-	-	-	-	-	-	-	-	-	57					
									-	59	60	-	62	63	64	-	-	-	-	-	-	-	72	-	-	-	-	100	-		
									-	-	79	80	81	82	83	84	85	-	-	-	-	-	-	-	-	-	-	102	-		
GPEC RCPT CONN 103 CKT END LVR KEY 2/103	349932001	2-BLACK	IH	PLR	LE	LA	M	R	-	-	-	-	-	-	-	-	-	-	-	-	-	-	-	-	-	-	-	-	-	SALEABLE	
									-	-	-	-	-	-	-	-	-	-	-	-	-	-	-	-	-	-	-	-	-		
									-	-	-	-	-	-	-	-	-	-	-	-	-	-	-	-	-	-	-				
									-	-	-	-	-	-	-	-	-	-	-	-	-	-	-	-	-	-	-	-	-		
									-	-	-	-	-	-	-	-	-	-	-	-	-	-	-	-	-	-	-	-	-		
GPEC RCPT CONN 103 CKT END LVR KEY 2/56	349932002	2-BLACK	IH	PLR	LE	LA	M	R	-	-	-	-	-	6	7	8	9	10	11	12	13	-	-	-	-	-	-		96	-	SALEABLE	
									-	-	-	23	-	-	-	-	28	-	-	31	-	-	-	35	-	-	-		98	-		
									39	40	-	-	43	44	45	46	47	48	-	-	-	-	-	-	-	-	57				
									58	-	60	61	62	63	64	65	-	-	68	69	-	71	-	73	74	-	-		-	-		
									77	78	-	80	81	82	83	84	85	-	87	88	-	90	91	-	-	-	-		-	-		
GPEC RCPT CONN 103 CKT TOP LVR KEY 2/103	349933001	2-BLACK	IH	PLR	LT	LA	M	R	-	-	-	-	-	-	-	-	-	-	-	-	-	-	-	-	-	-	-		-	-	SALEABLE	
									-	-	-	-	-	-	-	-	-	-	-	-	-	-	-	-	-	-	-		-	-		
									-	-	-	-	-	-	-	-	-	-	-	-	-	-	-	-	-	-	-					
									-	-	-	-	-	-	-	-	-	-	-	-	-	-	-	-	-	-	-		-	-		
									-	-	-	-	-	-	-	-	-	-	-	-	-	-	-	-	-	-	-		-	-		
GPEC RCPT CONN 103 CKT END LVR KEY 3/103	349934001	3-BLACK	IH	PLR	LE	LA	M	R	-	-	-	-	-	-	-	-	-	-	-	-	-	-	-	-	-	-	-		-	-	SALEABLE	
									-	-	-	-	-	-	-	-	-	-	-	-	-	-	-	-	-	-	-		-	-		
									-	-	-	-	-	-	-	-	-	-	-	-	-	-	-	-	-	-	-		-	-		
									-	-	-	-	-	-	-	-	-	-	-	-	-	-	-	-	-	-	-		-	-		
									-	-	-	-	-	-	-	-	-	-	-	-	-	-	-	-	-	-	-		-	-		
GPEC RCPT CONN 103 CKT END LVR KEY 3/89	349934002	3-BLACK	IH	PLR	LE	LA	M	R	1	-	-	4	5	-	-	-	-	-	-	-	-	-	-	-	-	-	-		-	-	SALEABLE	
									-	-	-	-	24	-	-	-	-	-	-	-	-	-	-	-	-	-	-		-	-		
									-	-	-	-	-	-	-	46	47	48	-	-	-	-	-	-	-	56	57				
									-	-	-	61	-	-	-	-	-	-	-	-	-	71	-	-	-	-	-		-	-		
									-	-	-	-	-	-	-	-	-	86	-	-	-	90	91	-	-	-	-		-	-		
GPEC RCPT CONN 103 CKT END LVR KEY 3/68	349934003	3-BLACK	IH	PLR	LE	LA	M	R	1	-	3	-	5	-	7	8	-	-	-	-	-	-	-	-	17	-	-		-	-	SALEABLE	
									20	-	-	-	24	-	-	-	-	-	-	-	32	-	-	35	36	37	-		-	-		
									-	40	-	-	-	-	-	46	47	48	-	-	-	-	-	-	-	56	57				
									-	-	60	61	62	63	64	-	-	67	-	-	-	71	-	-	-	-	76		-	-		
									77	-	-	-	81	-	-	-	-	86	87	-	89	90	91	92	-	-	95		-	-		

molex

GPEC IV 103 WAY RECEPTACLE SEALED ASSEMBLY MAT SEAL

BOM AND PIN OUT SHEET

ASSEMBLY DESCRIPTION	ASSEMBLY PART NUMBER	COMPONENT THE PRESENCE OF AN ABBREVIATION INDICATES THE PRESENCE OF THAT COMPONENT.							BLOCKED TERMINALS CAVITY WITH A NUMBER INDICATES BLOCKED TERMINAL POSITION CAVITY WITHOUT A NUMBER INDICATES OPEN TERMINAL POSITION																					STATUS	COMMENTS
		OUTER HOUSING KEY/COLOR	INNER HOUSING	PLR	LEVER	LEVER ARM (x/2)	MAT SEAL	RING SEAL																						
GPEC RCPT CONN 103 CKT TOP LVR KEY 3/103	349935001	3-BLACK	IH	PLR	LT	LA	M	R	-	-	-	-	-	-	-	-	-	-	-	-	-	-	-	-	-	-	-	-	SALEABLE	
									-	-	-	-	-	-	-	-	-	-	-	-	-	-	-	-	-	-	-	-		
									-	-	-	-	-	-	-	-	-	-	-	-	-	-	-	-	-	-	-	-		
									-	-	-	-	-	-	-	-	-	-	-	-	-	-	-	-	-	-	-	-		
									-	-	-	-	-	-	-	-	-	-	-	-	-	-	-	-	-	-	-	-		
GPEC RCPT CONN 103 CKT TOP LVR KEY 3/65	349935002	3-BLACK	IH	PLR	LT	LA	M	R	-	-	-	-	-	-	-	-	10	-	-	-	-	-	-	-	19	-	-	-	SALEABLE	
									-	21	-	-	24	-	-	-	-	-	-	32	33	-	35	-	-	-	-	-		
									39	-	-	42	43	44	45	-	-	-	-	50	51	52	53	-	55	56	-	-		
									58	59	60	61	62	63	64	65	66	67	68	69	70	71	72	73	74	75	-	-		
									-	-	-	-	-	-	-	-	-	-	-	88	89	-	-	-	-	-	-	-		
GPEC RCPT CONN 103 CKT END LVR KEY 4/103	349936001	4-BLACK	IH	PLR	LE	LA	M	R	-	-	-	-	-	-	-	-	-	-	-	-	-	-	-	-	-	-	-	-	SALEABLE	
									-	-	-	-	-	-	-	-	-	-	-	-	-	-	-	-	-	-	-	-		
									-	-	-	-	-	-	-	-	-	-	-	-	-	-	-	-	-	-	-	-		
									-	-	-	-	-	-	-	-	-	-	-	-	-	-	-	-	-	-	-	-		
									-	-	-	-	-	-	-	-	-	-	-	-	-	-	-	-	-	-	-	-		
GPEC RCPT CONN 103 CKT END LVR KEY 4/62	349936002	4-BLACK	IH	PLR	LE	LA	M	R	-	-	3	4	-	-	7	-	-	-	-	-	-	-	-	-	-	19	-	-	SALEABLE	
									-	21	22	23	-	-	-	-	-	-	30	-	32	-	-	35	-	37	38	-		
									-	-	-	-	43	44	45	-	-	-	-	50	-	-	-	-	-	-	-	-		
									-	-	60	-	-	-	-	-	-	-	68	69	-	-	72	73	-	75	-	-		
									77	78	79	80	81	82	83	84	85	86	87	88	89	90	91	92	93	94	95	-		
GPEC RCPT CONN 103 CKT END LVR KEY 4/57	349936003	4-BLACK	IH	PLR	LE	LA	M	R	-	2	3	4	-	-	7	-	-	-	-	-	-	-	-	-	-	19	-	-	SALEABLE	
									20	21	22	23	-	-	-	-	-	-	30	-	32	-	-	35	-	37	38	-		
									-	-	-	-	43	44	45	-	47	-	-	50	-	-	-	-	-	-	-	-		
									-	59	60	-	-	-	-	-	-	-	68	69	-	-	72	73	74	-	76	-		
									77	78	79	80	81	82	83	84	85	86	87	88	89	90	91	92	93	94	95	-		
GPEC RCPT CONN 103 CKT END LVR KEY 4/53	349936004	4-BLACK	IH	PLR	LE	LA	M	R	-	2	3	4	-	-	7	-	-	-	-	12	-	-	-	-	-	18	19	-	SALEABLE	
									20	21	22	23	-	-	-	-	-	-	30	-	32	-	34	-	-	37	38	-		
									-	-	-	-	43	44	45	-	-	-	-	50	-	-	53	54	-	56	-	-		
									-	59	60	-	-	-	-	-	-	-	68	69	-	-	72	73	-	75	76	-		
									77	78	79	80	81	82	83	84	85	86	87	88	89	90	91	92	93	94	95	-		
GPEC RCPT CONN 103 CKT END LVR KEY 4/51	349936005	4-BLACK	IH	PLR	LE	LA	M	R	-	2	3	4	-	-	7	-	-	-	-	12	-	-	-	-	-	18	19	-	SALEABLE	
									20	21	22	23	-	-	-	-	-	-	30	-	32	-	34	-	-	37	38	-		
									-	-	-	-	43	44	45	-	-	-	-	50	-	-	53	54	-	56	-	-		
									-	59	60	-	-	-	-	-	-	-	68	69	70	71	72	73	-	75	76	-		
									77	78	79	80	81	82	83	84	85	86	87	88	89	90	91	92	93	94	95	-		
GPEC RCPT CONN 103 CKT END LVR KEY 4/52	349936006	4-BLACK	IH	PLR	LE	LA	M	R	-	2	3	4	-	-	7	-	-	-	-	12	-	-	-	-	-	18	19	-	SALEABLE	
									20	21	22	23	-	-	-	-	-	-	30	-	32	-	34	35	-	37	38	-		
									-	-	-	-	43	44	45	-	-	-	-	50	-	-	53	54	-	56	-	-		
									-	59	60	-	-	-	-	-	-	-	68	69	-	-	72	73	-	75	76	-		
									77	78	79	80	81	82	83	84	85	86	87	88	89	90	91	92	93	94	95	-		
GPEC RCPT CONN 103 CKT END LVR KEY 4/50	349936007	4-BLACK	IH	PLR	LE	LA	M	R	-	2	3	4	-	-	7	-	-	-	-	12	-	-	-	-	-	18	19	-	SALEABLE	
									20	21	22	23	-	-	-	-	-	-	30	-	32	-	34	35	-	37	38	-		
									-	-	-	-	43	44	45	-	-	-	-	50	-	-	53	54	-	56	-	-		
									-	59	60	-	-	-	-	-	-	-	68	69	70	71	72	73	-	75	76	-		
									77	78	79	80	81	82	83	84	85	86	87	88	89	90	91	92	93	94	95	-		
GPEC RCPT CONN 103 CKT END LVR KEY 4/102	349936008	4-BLACK	IH	PLR	LE	LA	M	R	-	-	-	-	-	-	-	-	-	-	-	-	-	-	-	-	-	-	-	-	SALEABLE	
									-	-	-	-	-	-	-	-	-	-	-	-	-	-	-	-	-	-	-	-		
									-	-	-	-	-	-	-	-	-	-	-	-	-	-	-	-	-	-	-	-		
									-	-	-	-	-	-	-	-	-	-	-	-	-	-	-	-	-	-	-	-		
									-	-	-	-	-	-	-	-	-	-	-	-	-	-	-	-	-	-	95	-		

molex

GPEC IV 103 WAY RECEPTACLE SEALED ASSEMBLY MAT SEAL

BOM AND PIN OUT SHEET

ASSEMBLY DESCRIPTION	ASSEMBLY PART NUMBER	COMPONENT THE PRESENCE OF AN ABBREVIATION INDICATES THE PRESENCE OF THAT COMPONENT.							BLOCKED TERMINALS CAVITY WITH A NUMBER INDICATES BLOCKED TERMINAL POSITION CAVITY WITHOUT A NUMBER INDICATES OPEN TERMINAL POSITION																					STATUS	COMMENTS
		OUTER HOUSING KEY/COLOR	INNER HOUSING	PLR	LEVER	LEVER ARM (x/2)	MAT SEAL	RING SEAL																						
GPEC RCPT CONN 103 CKT END LVR KEY 4/84	349936009	4-BLACK	IH	PLR	LE	LA	M	R	-	-	-	-	-	-	-	-	-	-	-	-	-	-	-	-	-	-	-	-	SALEABLE	
									-	-	-	-	-	-	-	-	-	-	-	-	-	-	-	-	-	-	-	-		
									-	-	-	-	-	-	-	-	-	-	-	-	-	-	-	-						
									-	-	-	-	-	-	-	-	-	-	-	-	-	-	-	-	-	-	-	-		
									77	78	79	80	81	82	83	84	85	86	87	88	89	90	91	92	93	94	95	-	-	
GPEC RCPT CONN 103 CKT END LVR KEY 4/49	349936010	4-BLACK	IH	PLR	LE	LA	M	R	-	-	3	4	5	-	7	-	-	-	11	12	-	-	-	-	17	18	19	-	-	SALEABLE	
									20	-	-	23	-	-	-	-	-	-	30	-	32	33	34	35	36	37	38	-	-		
									-	-	-	-	43	44	45	-	-	-	-	50	-	-	53	54	-	-	-				
									-	-	60	-	-	-	-	-	66	-	68	69	70	71	72	73	-	75	76	-	-	
									77	78	79	80	81	82	83	84	85	86	87	88	89	90	91	92	93	94	95	-	-	
GPEC RCPT CONN 103 CKT END LVR KEY 4/51	349936011	4-BLACK	IH	PLR	LE	LA	M	R	-	-	3	4	-	-	7	-	-	10	11	12	-	-	-	-	17	18	19	-	-	SALEABLE	
									20	-	-	23	-	25	-	-	-	-	30	-	32	33	34	35	36	37	38	-	-		
									-	-	-	-	43	44	45	-	47	-	-	-	-	52	53	54	-	-	-				
									-	-	60	-	-	-	-	-	-	-	68	69	-	-	72	-	-	75	76	-	-	
									77	78	79	80	81	82	83	84	85	86	87	88	89	90	91	92	93	94	95	-	-	
GPEC RCPT CONN 103 CKT END LVR KEY 4/16	349936012	4-BLACK	IH	PLR	LE	LA	M	R	1	2	3	4	5	6	7	8	9	10	11	12	13	14	15	16	17	18	19	-	-	SALEABLE	
									20	21	22	23	24	25	26	27	28	29	30	31	32	33	34	35	36	37	38	-	-		
									39	40	41	42	43	-	45	-	47	48	49	50	51	-	53	54	55	56	57				
									58	59	60	61	62	-	-	-	66	-	-	-	-	71	-	-	74	75	76	100	101		
									77	78	79	80	81	82	83	84	85	86	87	88	89	90	91	92	93	94	95	102	103	
GPEC RCPT CONN 103 CKT END LVR KEY 4/14	349936013	4-BLACK	IH	PLR	LE	LA	M	R	1	2	3	4	5	6	7	8	9	10	11	12	13	14	15	16	17	18	19	-	-	SALEABLE	
									20	21	22	23	24	25	26	27	28	29	30	31	32	33	34	35	36	37	38	-	-		
									39	40	41	42	43	-	45	-	47	48	49	50	51	-	53	54	55	56	57				
									58	59	60	61	62	-	64	65	66	-	-	-	-	71	-	-	74	75	76	100	101		
									77	78	79	80	81	82	83	84	85	86	87	88	89	90	91	92	93	94	95	102	103	
GPEC RCPT CONN 103 CKT END LVR KEY 4/38	349936014	4-BLACK	IH	PLR	LE	LA	M	R	1	2	3	-	5	6	-	-	9	-	11	12	-	14	-	-	17	18	19	-	-	SALEABLE	
									20	21	22	23	24	25	26	27	-	-	30	-	32	33	34	35	36	37	38	-	-		
									39	-	-	-	43	44	45	-	-	-	-	50	-	-	53	54	-	-	57				
									-	-	-	-	-	-	-	-	66	-	68	69	70	71	72	73	74	75	76	-	-	
									77	78	79	80	81	82	83	84	85	86	87	88	89	90	91	92	93	94	95	-	-	
GPEC RCPT CONN 103 CKT END LVR KEY 4/0	349936015	4-BLACK	IH	PLR	LE	LA	M	R	1	2	3	4	5	6	7	8	9	10	11	12	13	14	15	16	17	18	19	96	97	SALEABLE	
									20	21	22	23	24	25	26	27	28	29	30	31	32	33	34	35	36	37	38	98	99		
									39	40	41	42	43	44	45	46	47	48	49	50	51	52	53	54	55	56	57				
									58	59	60	61	62	63	64	65	66	67	68	69	70	71	72	73	74	75	76	100	101	
									77	78	79	80	81	82	83	84	85	86	87	88	89	90	91	92	93	94	95	102	103	
GPEC RCPT CONN 103 CKT END LVR KEY 4/54	349936016	4-BLACK	IH	PLR	LE	LA	M	R	-	-	3	4	-	-	-	-	-	10	11	12	-	-	-	-	17	18	19	-	-	SALEABLE	
									20	-	-	23	-	-	-	-	-	-	30	-	32	33	34	35	36	37	38	-	-		
									-	-	-	-	43	44	45	-	47	-	-	-	-	52	53	54	-	-	-				
									-	-	-	-	-	-	-	-	-	-	68	69	-	-	72	-	-	75	76	-	-	
									77	78	79	80	81	82	83	84	85	86	87	88	89	90	91	92	93	94	95	-	-	
GPEC RCPT CONN 103 CKT END LVR KEY 4/69	349936017	4-BLACK	IH	PLR	LE	LA	M	R	-	-	-	-	-	-	-	-	-	-	-	12	-	-	15	16	17	-	-	-	-	SALEABLE	
									-	-	-	-	24	-	-	-	-	-	-	-	-	-	-	-	-	-	-	-	-		
									39	-	-	-	-	44	45	-	-	-	-	-	51	-	-	-	-	-	-				
									-	-	-	-	-	-	-	-	-	-	68	69	-	71	72	-	74	-	76	-	-	
									77	78	79	80	81	82	83	84	85	86	87	88	89	90	91	92	93	94	95	-	-	
GPEC RCPT CONN 103 CKT TOP LVR KEY 4/103	349937001	4-BLACK	IH	PLR	LT	LA	M	R	-	-	-	-	-	-	-	-	-	-	-	-	-	-	-	-	-	-	-	-	-	SALEABLE	
									-	-	-	-	-	-	-	-	-	-	-	-	-	-	-	-	-	-	-	-	-		
									-	-	-	-	-	-	-	-	-	-	-	-	-	-	-	-	-	-	-	-	-		
									-	-	-	-	-	-	-	-	-	-	-	-	-	-	-	-	-	-	-	-	-		
									-	-	-	-	-	-	-	-	-	-	-	-	-	-	-	-	-	-	-	-	-		

molex

GPEC IV 103 WAY RECEPTACLE SEALED ASSEMBLY MAT SEAL

BOM AND PIN OUT SHEET

ASSEMBLY DESCRIPTION	ASSEMBLY PART NUMBER	COMPONENT THE PRESENCE OF AN ABBREVIATION INDICATES THE PRESENCE OF THAT COMPONENT.							BLOCKED TERMINALS CAVITY WITH A NUMBER INDICATES BLOCKED TERMINAL POSITION CAVITY WITHOUT A NUMBER INDICATES OPEN TERMINAL POSITION																					STATUS	COMMENTS
		OUTER HOUSING KEY/COLOR	INNER HOUSING	PLR	LEVER	LEVER ARM (x/2)	MAT SEAL	RING SEAL																						
GPEC RCPT CONN 103 CKT TOP LVR KEY 4/84	349937002	4-BLACK	IH	PLR	LT	LA	M	R	-	-	-	-	-	-	-	-	-	-	-	-	-	-	-	-	-	-	-	-	SALEABLE	
									-	-	-	-	-	-	-	-	-	-	-	-	-	-	-	-	-	-	-	-		
									-	-	-	-	-	-	-	-	-	-	-	-	-	-	-	-						
									-	-	-	-	-	-	-	-	-	-	-	-	-	-	-	-	-	-	-	-		
									77	78	79	80	81	82	83	84	85	86	87	88	89	90	91	92	93	94	95	-	-	
GPEC RCPT CONN 103 CKT TOP LVR KEY 4/56	349937003	4-BLACK	IH	PLR	LT	LA	M	R	-	-	-	-	-	6	7	8	9	10	11	12	13	-	-	-	-	-	-	96	-	SALEABLE	
									-	-	-	23	-	-	-	-	28	-	-	31	-	-	-	35	-	-	-	98	-		
									39	40	-	-	43	44	45	46	47	48	-	-	-	-	-	-	-	-	57			
									58	-	60	61	62	63	64	65	-	-	68	69	-	71	-	73	74	-	-	-	-	
									77	78	-	80	81	82	83	84	85	-	87	88	-	90	91	-	-	-	-	-	-	
GPEC RCPT CONN 103 CKT TOP LVR KEY 4/59	349937004	4-BLACK	IH	PLR	LT	LA	M	R	-	-	-	-	-	6	7	8	9	10	11	12	13	-	-	-	-	-	-	96	-	SALEABLE	
									-	-	-	23	-	-	-	-	-	-	-	31	-	-	-	35	-	-	-	-	-		
									39	-	-	-	43	44	45	46	47	48	-	-	-	-	-	-	-	-	57			
									58	-	60	61	62	63	64	65	-	-	68	69	-	71	-	73	74	-	-	-	-	
									77	78	-	80	81	82	83	84	85	-	87	88	-	90	91	-	-	-	-	-	-	
GPEC RCPT CONN 103 CKT TOP LVR KEY 4/54	349937005	4-BLACK	IH	PLR	LT	LA	M	R	1	2	3	4	5	6	7	8	9	10	11	12	13	-	-	-	-	-	-	96	-	SALEABLE	
									-	-	-	23	-	-	-	-	-	-	-	31	-	-	-	35	-	-	-	-	-		
									39	-	-	-	43	44	45	46	47	48	-	-	-	-	-	-	-	-	57			
									58	-	60	61	62	63	64	65	-	-	68	69	-	71	-	73	74	-	-	-	-	
									77	78	-	80	81	82	83	84	85	-	87	88	-	90	91	-	-	-	-	-	-	
GPEC RCPT CONN 103 CKT TOP LVR KEY 4/58	349937006	4-BLACK	IH	PLR	LT	LA	M	R	-	-	-	-	-	6	7	8	9	10	11	12	13	-	-	-	-	-	-	96	-	SALEABLE	
									-	-	-	23	-	-	-	-	28	-	-	31	-	-	-	35	-	-	-	98	-		
									39	40	-	-	43	44	45	46	47	48	-	-	-	-	-	-	-	-	-			
									58	-	60	61	62	63	64	65	-	-	68	69	-	71	-	-	74	-	-	-	-	
									77	78	-	80	81	82	83	84	85	-	87	88	-	90	91	-	-	-	-	-	-	
GPEC RCPT CONN 103 CKT TOP LVR KEY 4/58	349937007	4-BLACK	IH	PLR	LT	LA	M	R	-	-	-	-	-	6	7	8	9	10	11	12	13	-	-	-	-	-	-	96	-	SALEABLE	
									-	-	-	23	-	-	-	-	28	-	-	31	-	-	-	35	-	-	-	98	-		
									39	-	-	-	43	44	45	46	47	48	-	-	-	-	-	-	-	-	-			
									58	59	60	61	62	63	64	65	-	-	68	69	-	71	-	-	74	-	-	-	-	
									77	78	-	80	81	82	83	84	85	-	87	88	-	90	91	-	-	-	-	-	-	
GPEC RCPT CONN 103 CKT TOP LVR KEY 4/58	349937008	4-BLACK	IH	PLR	LT	LA	M	R	-	-	-	-	-	6	7	8	9	10	11	12	13	-	-	-	-	-	-	96	-	SALEABLE	
									-	-	-	23	-	-	-	-	-	-	-	31	-	-	-	35	-	-	-	-	-		
									39	-	41	-	43	44	45	46	47	48	-	-	-	-	-	-	-	-	57			
									58	-	60	61	62	63	64	65	-	-	68	69	-	71	-	73	74	-	-	-	-	
									77	78	-	80	81	82	83	84	85	-	87	88	-	90	91	-	-	-	-	-	-	
GPEC RCPT CONN 103 CKT TOP LVR KEY 4/54	349937009	4-BLACK	IH	PLR	LT	LA	M	R	-	-	-	-	-	6	7	8	9	10	11	12	13	-	-	-	-	-	-	96	-	SALEABLE	
									-	-	-	23	-	-	-	-	28	-	-	31	-	-	-	35	-	-	-	98	-		
									39	40	41	-	43	44	45	46	47	48	-	-	-	-	-	-	-	-	57			
									58	59	60	61	62	63	64	65	-	-	68	69	-	71	-	73	74	-	-	-	-	
									77	78	-	80	81	82	83	84	85	-	87	88	-	90	91	-	-	-	-	-	-	
GPEC RCPT CONN 103 CKT TOP LVR KEY 4/55	349937010	4-BLACK	IH	PLR	LT	LA	M	R	-	-	-	-	-	6	7	8	9	10	11	12	13	-	-	-	-	-	-	96	-	SALEABLE	
									-	-	-	23	-	-	-	-	28	-	-	31	-	-	-	35	-	-	-	98	-		
									39	40	41	-	43	44	45	46	47	48	-	-	-	-	-	-	-	-	57			
									58	-	60	61	62	63	64	65	-	-	68	69	-	71	-	73	74	-	-	-	-	
									77	78	-	80	81	82	83	84	85	-	87	88	-	90	91	-	-	-	-	-	-	
GPEC RCPT CONN 103 CKT TOP LVR KEY 4/39	349937011	4-BLACK	IH	PLR	LT	LA	M	R	1	2	3	-	5	-	-	-	9	-	-	12	13	14	15	16	-	18	19	-	-	SALEABLE	
									20	21	22	23	24	-	-	27	-	29	30	31	32	-	34	35	-	37	38	-	-		
									-	-	-	-	43	44	45	-	-	-	-	50	51	-	53	54	55	56	57				
									-	59	-	-	-	-	-	-	-	-	68	69	70	71	72	73	74	75	-	-	-	
									77	78	79	80	81	82	83	84	85	86	87	88	89	90	91	92	93	94	95	-	-	

molex

GPEC IV 103 WAY RECEPTACLE SEALED ASSEMBLY MAT SEAL

BOM AND PIN OUT SHEET

ASSEMBLY DESCRIPTION	ASSEMBLY PART NUMBER	COMPONENT THE PRESENCE OF AN ABBREVIATION INDICATES THE PRESENCE OF THAT COMPONENT.							BLOCKED TERMINALS CAVITY WITH A NUMBER INDICATES BLOCKED TERMINAL POSITION CAVITY WITHOUT A NUMBER INDICATES OPEN TERMINAL POSITION																						STATUS	COMMENTS
		OUTER HOUSING KEY/COLOR	INNER HOUSING	PLR	LEVER	LEVER ARM (x/2)	MAT SEAL	RING SEAL																							
GPEC RCPT CONN 103 CKT TOP LVR KEY 4/28	349937012	4-BLACK	IH	PLR	LT	LA	M	R	1	2	3	4	5	6	-	8	9	-	11	12	13	14	15	16	-	18	19		-	-	SALEABLE	
									20	21	22	23	24	25	26	27	-	29	30	31	32	-	34	35	-	37	38		-	-		
									39	-	-	42	43	44	45	-	-	48	49	50	51	-	53	54	55	56	57					
									58	59	-	-	-	-	-	-	-	-	68	69	70	71	72	73	74	75	-		-	-		
									77	78	79	80	81	82	83	84	85	86	87	88	89	90	91	92	93	94	95		-	-		
GPEC RCPT CONN 103 CKT TOP LVR KEY 4/58	349937013	4-BLACK	IH	PLR	LT	LA	M	R	-	2	3	4	-	-	7	-	-	-	-	12	-	-	-	-	-	18	19		-	-	SALEABLE	
									-	-	22	23	-	-	-	-	-	-	30	-	32	-	34	35	-	37	38		-	-		
									-	-	-	-	43	44	45	-	-	-	-	50	-	-	-	54	-	56	-					
									-	-	60	-	-	-	-	-	-	-	-	-	-	-	72	73	74	75	-		-	-		
									77	78	79	80	81	82	83	84	85	86	87	88	89	90	91	92	93	94	95		-	-		
GPEC RCPT CONN 103 CKT TOP LVR KEY 4/60	349937014	4-BLACK	IH	PLR	LT	LA	M	R	-	2	3	4	-	-	-	-	-	-	-	-	-	-	-	-	-	-	19		-	-	SALEABLE	
									-	-	22	23	-	-	-	-	-	-	30	-	32	-	-	35	-	37	38		-	-		
									-	-	-	-	43	44	45	-	-	-	-	50	-	-	53	54	-	-	-					
									-	-	60	-	-	-	-	-	-	-	68	69	-	-	72	73	74	75	-		-	-		
									77	78	79	80	81	82	83	84	85	86	87	88	89	90	91	92	93	94	95		-	-		
GPEC RCPT CONN 103 CKT TOP LVR KEY 4/101	349937015	4-BLACK	IH	PLR	LT	LA	M	R	-	-	-	-	-	-	-	-	-	-	-	-	-	-	-	-	-	-	-		-	-	SALEABLE	
									-	-	-	-	-	-	-	-	-	-	-	-	-	-	-	-	-	-	-		-	-		
									-	-	41	-	-	-	-	-	-	-	-	-	-	-	-	-	-	-	-					
									-	59	-	-	-	-	-	-	-	-	-	-	-	-	-	-	-	-	-		-	-		
									-	-	-	-	-	-	-	-	-	-	-	-	-	-	-	-	-	-	-		-	-		
GPEC RCPT CONN 103 CKT TOP LVR KEY 4/58	349937016	4-BLACK	IH	PLR	LT	LA	M	R	-	-	-	-	-	6	7	8	9	10	11	12	13	-	-	-	-	-	-		96	-	SALEABLE	
									-	-	-	23	-	-	-	-	-	-	-	31	-	-	-	35	-	-	-		-	-		
									39	-	41	-	43	44	45	46	47	48	-	-	-	-	-	-	-	-	57					
									58	59	60	61	62	63	64	-	-	-	68	69	-	71	-	73	74	-	-		-	-		
									77	78	-	80	81	82	83	84	85	-	87	88	-	90	91	-	-	-	-		-	-		
GPEC RCPT CONN 103 CKT TOP LVR KEY 4/57	349937017	4-BLACK	IH	PLR	LT	LA	M	R	-	-	-	-	-	6	7	8	9	10	11	12	13	-	-	-	-	-	-		96	-	SALEABLE	
									-	-	-	23	-	-	-	-	-	-	-	31	-	-	-	35	-	-	-		-	-		
									39	-	41	-	43	44	45	46	47	48	-	-	-	-	-	-	-	-	57					
									58	59	60	61	62	63	64	65	-	-	68	69	-	71	-	73	74	-	-		-	-		
									77	78	-	80	81	82	83	84	85	-	87	88	-	90	91	-	-	-	-		-	-		
GPEC RCPT CONN 103 CKT TOP LVR KEY 4/52	349937018	4-BLACK	IH	PLR	LT	LA	M	R	1	2	3	4	5	6	7	8	9	-	11	-	-	-	-	-	-	18	19		-	-	SALEABLE	
									-	-	22	-	24	25	-	27	-	29	-	31	32	-	34	35	-	37	-		-	-		
									-	-	-	42	-	-	45	46	-	-	-	-	51	52	53	-	-	-	-					
									58	-	-	-	-	63	64	-	-	-	-	-	-	-	-	-	74	-	-		-	-		
									77	78	79	80	81	82	83	84	85	86	87	88	89	90	91	92	93	94	95		-	-		
GPEC RCPT CONN 103 CKT TOP LVR KEY 4/52	349937019	4-BLACK	IH	PLR	LT	LA	M	R	1	2	-	-	-	-	-	-	9	-	11	12	13	14	15	16	17	18	19		-	-	SALEABLE	
									-	21	-	23	24	-	26	27	-	29	-	31	-	33	34	-	36	-	-		-	-		
									-	-	-	-	43	44	45	-	-	-	-	50	51	-	-	54	-	-	-					
									-	-	60	-	-	-	-	-	-	-	-	-	70	71	-	-	-	-	76		-	-		
									77	78	79	80	81	82	83	84	85	86	87	88	89	90	91	92	93	94	95		-	-		
GPEC RCPT CONN 103 CKT TOP LVR KEY 4/54	349937020	4-BLACK	IH	PLR	LT	LA	M	R	-	-	-	-	-	-	7	-	-	-	11	12	-	-	-	-	17	18	19		-	-	SALEABLE	
									-	-	-	-	-	-	-	27	-	-	-	-	32	-	34	-	36	37	38		-	-		
									-	-	-	42	43	44	45	-	-	-	-	50	-	52	53	-	-	-	-					
									-	-	60	-	-	-	-	-	66	-	68	69	70	71	72	73	74	75	76		-	-		
									77	78	79	80	81	82	83	84	85	86	87	88	89	90	91	92	93	94	95		-	-		
GPEC RCPT CONN 103 CKT TOP LVR KEY 4/35	349937021	4-BLACK	IH	PLR	LT	LA	M	R	1	2	3	-	5	-	-	-	9	-	11	12	13	14	15	16	17	18	19		-	-	SALEABLE	
									20	21	-	23	24	-	26	27	-	29	30	31	32	33	34	35	36	37	38		-	-		
									39	40	-	-	43	44	45	-	-	-	-	50	51	-	-	54	-	56	57					
									-	-	60	-	-	-	-	-	66	-	68	69	70	71	72	73	74	-	-		-	-		
									77	78	79	80	81	82	83	84	85	86	87	88	89	90	91	92	93	94	95		-	-		

molex

GPEC IV 103 WAY RECEPTACLE SEALED ASSEMBLY MAT SEAL

BOM AND PIN OUT SHEET

ASSEMBLY DESCRIPTION	ASSEMBLY PART NUMBER	COMPONENT THE PRESENCE OF AN ABBREVIATION INDICATES THE PRESENCE OF THAT COMPONENT.							BLOCKED TERMINALS CAVITY WITH A NUMBER INDICATES BLOCKED TERMINAL POSITION CAVITY WITHOUT A NUMBER INDICATES OPEN TERMINAL POSITION																				STATUS	COMMENTS
		OUTER HOUSING KEY/COLOR	INNER HOUSING	PLR	LEVER	LEVER ARM (x/2)	MAT SEAL	RING SEAL																					
GPEC RCPT CONN 103 CKT TOP LVR KEY 4/34	349937022	4-BLACK	IH	PLR	LT	LA	M	R	1	2	3	-	5	-	-	-	9	-	11	12	13	14	15	16	17	18	19	-	-	SALEABLE	
									20	21	-	23	24	-	26	27	-	29	30	31	32	33	34	35	36	37	38	-	-		
									39	40	-	-	43	44	45	-	47	-	-	50	51	-	-	54	-	56	57				
									-	-	60	-	-	-	-	-	66	-	68	69	70	71	72	73	74	-	-	-	-		
									77	78	79	80	81	82	83	84	85	86	87	88	89	90	91	92	93	94	95	-	-		
GPEC RCPT CONN 103 CKT TOP LVR KEY 4/14	349937023	4-BLACK	IH	PLR	LT	LA	M	R	1	2	3	4	5	6	7	8	9	10	11	12	13	14	15	16	17	18	19	-	-	SALEABLE	
									20	21	22	23	24	25	26	27	28	29	30	31	32	33	34	35	36	37	38	-	-		
									39	40	41	42	43	-	45	-	47	48	49	50	51	-	53	54	55	56	57				
									58	59	60	61	62	-	64	65	66	-	-	-	-	71	-	-	74	75	76	100	101		
									77	78	79	80	81	82	83	84	85	86	87	88	89	90	91	92	93	94	95	102	103		
GPEC RCPT CONN 103 CKT TOP LVR KEY 4/55	349937024	4-BLACK	IH	PLR	LT	LA	M	R	-	-	3	-	-	-	7	-	-	-	-	12	-	-	-	-	17	18	19	-	-	SALEABLE	
									-	-	22	-	24	-	-	-	-	-	30	-	32	33	34	35	-	37	38	-	-		
									-	-	-	-	43	44	45	-	-	-	-	50	-	-	53	54	-	-	-				
									-	-	60	-	-	-	-	-	-	-	-	-	70	71	72	73	74	75	76	-	-		
									77	78	79	80	81	82	83	84	85	86	87	88	89	90	91	92	93	94	95	-	-		
GPEC RCPT CONN 103 CKT TOP LVR KEY 4/57	349937025	4-BLACK	IH	PLR	LT	LA	M	R	-	-	3	-	-	-	7	-	-	-	-	12	-	-	-	-	17	18	19	-	-	SALEABLE	
									-	-	-	-	24	-	-	-	-	-	-	-	32	33	34	-	-	37	38	-	-		
									-	-	-	-	43	44	45	-	47	-	-	50	-	-	53	54	-	-	-				
									-	-	60	-	-	-	-	-	-	-	68	69	-	-	72	73	74	75	76	-	-		
									77	78	79	80	81	82	83	84	85	86	87	88	89	90	91	92	93	94	95	-	-		
GPEC RCPT CONN 103 CKT TOP LVR KEY 4/58	349937026	4-BLACK	IH	PLR	LT	LA	M	R	-	-	3	-	-	-	7	-	-	-	-	12	-	-	-	-	17	18	19	-	-	SALEABLE	
									-	-	-	-	24	-	-	-	-	-	-	-	32	33	34	-	-	37	38	-	-		
									-	-	-	-	43	44	45	-	-	-	-	50	-	-	53	54	-	-	-				
									-	-	60	-	-	-	-	-	-	-	68	69	-	-	72	73	74	75	76	-	-		
									77	78	79	80	81	82	83	84	85	86	87	88	89	90	91	92	93	94	95	-	-		
GPEC RCPT CONN 103 CKT TOP LVR KEY 4/46	349937027	4-BLACK	IH	PLR	LT	LA	M	R	-	-	3	4	5	-	7	-	9	-	11	12	-	14	-	-	17	18	19	-	-	SALEABLE	
									20	-	-	23	-	-	-	27	-	-	30	-	32	33	34	35	36	37	38	-	-		
									-	-	-	-	43	44	45	-	-	-	-	50	-	-	53	54	-	-	-				
									-	-	60	-	-	-	-	-	66	-	68	69	70	71	72	73	-	75	76	-	-		
									77	78	79	80	81	82	83	84	85	86	87	88	89	90	91	92	93	94	95	-	-		
GPEC RCPT CONN 103 CKT TOP LVR KEY 4/16	349937028	4-BLACK	IH	PLR	LT	LA	M	R	1	2	3	4	5	6	7	8	9	10	11	12	13	14	15	16	17	18	19	-	-	SALEABLE	
									20	21	22	23	24	25	26	27	28	29	30	31	32	33	34	35	36	37	38	-	-		
									39	40	41	42	43	-	45	-	47	48	49	50	51	-	53	54	55	56	57				
									58	59	60	61	62	-	-	-	66	-	-	-	-	71	-	-	74	75	76	100	101		
									77	78	79	80	81	82	83	84	85	86	87	88	89	90	91	92	93	94	95	102	103		
GPEC RCPT CONN 103 CKT TOP LVR KEY 4/47	349937029	4-BLACK	IH	PLR	LT	LA	M	R	-	-	3	4	5	-	7	-	9	-	11	12	-	14	-	-	17	18	19	-	-	SALEABLE	
									20	-	-	23	-	-	-	27	-	-	30	-	32	33	34	35	36	37	38	-	-		
									-	-	-	-	43	44	45	-	-	-	-	50	-	-	53	54	-	-	-				
									-	-	-	-	-	-	-	-	66	-	68	69	70	71	72	73	-	75	76	-	-		
									77	78	79	80	81	82	83	84	85	86	87	88	89	90	91	92	93	94	95	-	-		
GPEC RCPT CONN 103 CKT TOP LVR KEY 4/34	349937030	4-BLACK	IH	PLR	LT	LA	M	R	1	2	3	-	-	-	-	-	9	10	-	12	13	14	15	16	17	18	19	-	-	SALEABLE	
									20	21	-	-	24	-	-	27	-	29	30	31	32	33	34	35	36	37	38	-	-		
									39	40	-	-	43	44	45	-	-	-	-	50	51	-	53	54	55	56	57				
									58	-	60	-	-	-	64	65	-	-	-	-	70	71	72	73	74	75	76	-	-		
									77	78	79	80	81	82	83	84	85	86	87	88	89	90	91	92	93	94	95	-	-		
GPEC RCPT CONN 103 CKT END LVR KEY N/103	349938000	NIL - GRAY	IH	PLR	LE	LA	M	R	-	-	-	-	-	-	-	-	-	-	-	-	-	-	-	-	-	-	-	-	-	NOT RECOMMENDED	
									-	-	-	-	-	-	-	-	-	-	-	-	-	-	-	-	-	-	-	-	-		
									-	-	-	-	-	-	-	-	-	-	-	-	-	-	-	-	-	-	-	-	-		
									-	-	-	-	-	-	-	-	-	-	-	-	-	-	-	-	-	-	-	-	-		
									-	-	-	-	-	-	-	-	-	-	-	-	-	-	-	-	-	-	-	-	-		
									-	-	-	-	-	-	-	-	-	-	-	-	-	-	-	-	-	-	-	-	-		

molex

GPEC IV 103 WAY RECEPTACLE SEALED ASSEMBLY MAT SEAL

BOM AND PIN OUT SHEET

ASSEMBLY DESCRIPTION	ASSEMBLY PART NUMBER	COMPONENT THE PRESENCE OF AN ABBREVIATION INDICATES THE PRESENCE OF THAT COMPONENT.							BLOCKED TERMINALS CAVITY WITH A NUMBER INDICATES BLOCKED TERMINAL POSITION CAVITY WITHOUT A NUMBER INDICATES OPEN TERMINAL POSITION																				STATUS	COMMENTS
		OUTER HOUSING KEY/COLOR	INNER HOUSING	PLR	LEVER	LEVER ARM (x/2)	MAT SEAL	RING SEAL																					
GPEC RCPT CONN 103 CKT END LVR KEY 5/103	349938001	5-BLACK	IH	PLR	LE	LA	M	R	-	-	-	-	-	-	-	-	-	-	-	-	-	-	-	-	-	-	-	SALEABLE	
									-	-	-	-	-	-	-	-	-	-	-	-	-	-	-	-	-	-	-		
									-	-	-	-	-	-	-	-	-	-	-	-	-	-	-	-	-	-	-		
									-	-	-	-	-	-	-	-	-	-	-	-	-	-	-	-	-	-	-		
									-	-	-	-	-	-	-	-	-	-	-	-	-	-	-	-	-	-	-		
GPEC RCPT CONN 103 CKT END LVR KEY 5/103	349938002	5-BLACK	IH	PLR	LE	LA	M	R	-	-	-	-	-	-	-	-	-	-	-	-	-	-	-	-	-	-	-	SALEABLE	
									-	-	-	-	-	-	-	-	-	-	-	-	-	-	-	-	-	-	-		
									-	-	-	-	-	-	-	-	-	-	-	-	-	-	-	-	-	-	-		
									-	-	-	-	-	-	-	-	-	-	-	-	-	-	-	-	-	-	-		
									-	-	-	-	-	-	-	-	-	-	-	-	-	-	-	-	-	-	-		
GPEC RCPT CONN 103 CKT TOP LVR KEY 5/42	349938010	5-BLACK	IH	PLR	LT	LA	M	R	1	2	3	4	5	6	-	8	9	-	11	12	-	-	15	16	-	-	-	96	-	SALEABLE	
									20	21	-	-	-	25	26	27	-	-	30	31	-	-	34	-	-	37	-	98	-		
									39	-	-	42	43	44	45	-	-	48	49	-	-	-	-	54	55	-	57				
									58	-	60	61	62	63	64	-	-	67	68	69	-	71	72	-	74	75	76	-	-		
									77	-	-	80	81	82	83	84	85	86	-	88	89	-	-	92	93	94	95	-	-		
GPEC RCPT CONN 103 CKT TOP LVR KEY 5/42	349938010	5-BLACK	IH	PLR	LT	LA	M	R	1	2	3	4	5	6	-	8	9	-	11	12	-	-	15	16	-	-	-	96	-	SALEABLE	
									20	21	-	-	-	25	26	27	-	-	30	31	-	-	34	-	-	37	-	98	-		
									39	-	-	42	43	44	45	-	-	48	49	-	-	-	-	54	55	-	57				
									58	-	60	61	62	63	64	-	-	67	68	69	-	71	72	-	74	75	76	-	-		
									77	-	-	80	81	82	83	84	85	86	-	88	89	-	-	92	93	94	95	-	-		
GPEC RCPT CONN 103 CKT END LVR KEY 5/56	349938011	5-BLACK	IH	PLR	LE	LA	M	R	1	2	3	-	-	-	-	-	-	-	-	-	-	14	15	16	17	18	19	-	97	SALEABLE	
									-	-	22	23	24	25	-	27	-	29	-	-	32	33	34	-	36	37	38	-	99		
									-	-	-	42	-	-	-	-	-	-	49	50	51	52	53	54	-	-	-				
									-	59	-	-	-	-	-	-	-	67	-	69	70	-	-	-	-	-	76	-	101		
									-	-	-	80	81	82	83	84	85	-	-	-	89	90	-	92	-	94	-	-	103		
GPEC RCPT CONN 103 CKT END LVR KEY 5/47	349938012	5-BLACK	IH	PLR	LE	LA	M	R	-	-	-	4	5	6	7	8	9	10	11	12	13	-	-	-	-	-	-	96	-	SALEABLE	
									20	21	-	-	-	-	26	-	28	-	30	31	-	-	-	35	-	-	-	98	-		
									39	40	41	-	43	44	45	46	47	48	-	-	-	-	-	-	55	56	57				
									58	-	60	61	62	63	64	65	66	-	68	-	-	71	72	73	74	75	-	100	-		
									77	78	79	-	-	-	-	-	-	86	87	88	-	-	91	-	93	-	95	102	-		
GPEC RCPT CONN 103 CKT END LVR KEY 5/59	349938013	5-BLACK	IH	PLR	LE	LA	M	R	1	-	-	-	5	-	-	-	-	-	-	-	-	-	-	16	-	-	19	-	-	SALEABLE	
									20	-	22	23	24	-	-	-	-	-	30	-	32	-	-	35	-	37	38	-	-		
									-	-	-	-	43	44	45	-	-	-	-	-	-	52	53	-	55	56	57				
									58	-	-	-	-	-	-	-	-	-	-	-	-	-	-	73	74	75	-	-	-		
									77	78	79	80	81	82	83	84	85	86	87	88	89	90	91	92	93	94	95	-	-		
GPEC RCPT CONN 103 CKT END LVR KEY 5/52	349938014	5-BLACK	IH	PLR	LE	LA	M	R	1	-	3	4	5	-	7	-	9	-	-	-	-	-	-	16	17	-	-	-	-	SALEABLE	
									20	21	22	23	24	25	26	27	-	-	-	-	32	-	34	35	36	-	38	-	-		
									-	-	-	-	-	44	45	-	47	-	-	-	-	52	53	54	-	-	-				
									-	-	-	-	-	-	-	-	-	-	68	69	-	-	72	-	74	75	76	-	-		
									77	78	79	80	81	82	83	84	85	86	87	88	89	-	91	92	93	94	95	-	-		
GPEC RCPT CONN 103 CKT END LVR KEY 5/60	349938015	5-BLACK	IH	PLR	LE	LA	M	R	1	2	3	4	-	-	-	-	-	-	11	-	-	-	-	16	-	-	19	-	-	SALEABLE	
									-	-	22	-	24	-	26	-	-	29	-	-	32	-	-	35	36	-	38	-	-		
									-	-	-	-	43	-	-	-	-	-	-	-	-	52	53	-	55	56	57				
									58	-	60	-	-	-	-	-	-	-	-	-	-	-	-	73	74	75	-	-	-		
									77	78	-	-	81	82	83	84	85	86	87	88	89	90	91	92	93	94	95	-	-		
GPEC RCPT CONN 103 CKT END LVR KEY 5/61	349938016	5-BLACK	IH	PLR	LE	LA	M	R	1	-	-	-	5	-	-	-	-	-	-	-	-	-	-	16	-	-	19	-	-	SALEABLE	
									20	-	22	23	24	-	-	-	-	-	30	-	32	-	-	35	-	37	38	-	-		
									-	-	-	-	-	44	45	-	-	-	-	-	-	52	53	-	55	56	57				
									-	-	-	-	-	-	-	-	-	-	-	-	-	-	-	73	74	75	-	-	-		
									77	78	79	80	81	82	83	84	85	86	87	88	89	90	91	92	93	94	95	-	-		

molex

GPEC IV 103 WAY RECEPTACLE SEALED ASSEMBLY MAT SEAL

BOM AND PIN OUT SHEET

ASSEMBLY DESCRIPTION	ASSEMBLY PART NUMBER	COMPONENT THE PRESENCE OF AN ABBREVIATION INDICATES THE PRESENCE OF THAT COMPONENT.							BLOCKED TERMINALS CAVITY WITH A NUMBER INDICATES BLOCKED TERMINAL POSITION CAVITY WITHOUT A NUMBER INDICATES OPEN TERMINAL POSITION																					STATUS	COMMENTS
		OUTER HOUSING KEY/COLOR	INNER HOUSING	PLR	LEVER	LEVER ARM (x/2)	MAT SEAL	RING SEAL																						
GPEC RCPT CONN 103 CKT END LVR KEY 5/61	349938017	5-BLACK	IH	PLR	LE	LA	M	R	1	2	-	4	-	-	-	-	-	-	11	-	-	-	-	16	-	-	19		-	-	SALEABLE	
									-	-	22	-	24	-	26	-	-	29	-	-	32	-	-	35	36	-	38		-	-		
									-	-	-	-	43	-	-	-	-	-	-	-	-	52	53	-	55	56	57					
									58	-	60	-	-	-	-	-	-	-	-	-	-	-	-	73	74	75	-		-	-		
									77	78	-	-	81	82	83	84	85	86	87	88	89	90	91	92	93	94	95		-	-		
GPEC RCPT CONN 103 CKT END LVR KEY 5/48	349938018	5-BLACK	IH	PLR	LE	LA	M	R	1	-	3	4	5	-	7	-	9	10	-	-	-	-	-	16	17	-	-		-	-	SALEABLE	
									20	21	22	23	24	25	26	27	-	-	-	-	32	33	34	35	36	-	38		-	-		
									-	-	-	-	-	44	45	-	47	-	-	-	-	52	53	54	-	-	-					
									-	-	-	-	-	-	-	-	-	-	68	69	70	71	72	-	74	75	76		-	-		
									77	78	79	80	81	82	83	84	85	86	87	88	89	-	91	92	93	94	95		-	-		
GPEC RCPT CONN 103 CKT END LVR KEY 5/61	349938019	5-BLACK	IH	PLR	LE	LA	M	R	1	2	3	-	-	-	-	-	-	-	-	12	-	-	-	-	-	-	-		-	-	SALEABLE	
									20	21	-	-	-	-	26	27	-	-	-	-	32	-	34	35	36	-	38		-	-		
									-	-	-	-	-	44	45	-	-	-	-	-	-	52	53	54	-	-	57					
									-	-	60	-	-	-	-	-	-	-	-	-	-	-	-	73	74	75	76		-	-		
									77	78	79	80	81	82	83	84	85	86	87	88	89	90	-	92	93	94	95		-	-		
GPEC RCPT CONN 103 CKT END LVR KEY 5/102	349938020	5-BLACK	IH	PLR	LE	LA	M	R	-	-	-	-	-	-	-	-	-	-	-	-	-	-	-	-	-	-	-		-	-	SALEABLE	
									-	-	-	-	-	-	-	-	-	-	-	-	-	-	-	-	-	-	-		-	-		
									-	-	-	-	-	-	-	-	-	-	-	-	-	-	-	-	-	-	-					
									-	-	-	-	-	-	-	-	-	-	-	-	-	-	-	-	-	-	-		-	-		
									-	-	-	-	-	-	-	-	-	-	-	-	-	-	-	92	-	-	-		-	-		
GPEC RCPT CONN 103 CKT END LVR KEY 5/61	349938021	5-BLACK	IH	PLR	LE	LA	M	R	1	2	-	4	-	-	-	-	-	-	-	-	-	-	-	-	-	-	19		-	-	SALEABLE	
									-	-	22	-	-	-	26	-	-	29	30	-	32	-	-	35	-	37	38		-	-		
									-	-	-	-	43	44	45	-	-	-	-	-	-	52	53	-	55	56	57					
									-	-	60	-	-	-	-	-	-	-	-	-	-	-	-	73	74	75	76		-	-		
									77	78	79	80	81	82	83	84	85	86	87	88	89	90	-	-	93	94	95		-	-		
GPEC RCPT CONN 103 CKT END LVR KEY 5/74	349938022	5-BLACK	IH	PLR	LE	LA	M	R	-	-	3	-	-	-	-	-	-	-	-	-	-	-	-	-	-	-	-		-	-	SALEABLE	
									-	-	-	23	-	-	26	-	-	-	-	-	-	-	-	35	-	37	38		-	-		
									-	-	-	-	43	-	-	-	-	-	-	50	-	-	-	54	-	56	-					
									-	-	-	-	-	-	-	-	-	-	-	-	-	-	72	73	74	75	-		-	-		
									77	78	-	-	81	82	83	84	85	86	87	88	89	90	-	-	93	94	95		-	-		
GPEC RCPT CONN 103 CKT END LVR KEY 5/48	349938023	5-BLACK	IH	PLR	LE	LA	M	R	1	2	3	4	5	-	7	-	9	-	11	-	-	-	-	16	17	18	19		-	-	SALEABLE	
									20	21	22	23	24	25	-	27	-	-	30	-	32	-	34	35	36	37	38		-	-		
									-	-	-	-	-	44	45	-	-	-	-	-	-	52	53	-	55	56	57					
									-	-	-	-	-	-	-	-	-	-	-	-	-	-	-	73	74	75	-		-	-		
									77	78	79	80	81	82	83	84	85	86	87	88	89	90	91	92	93	94	95		-	-		
GPEC RCPT CONN 103 CKT END LVR KEY 5/50	349938024	5-BLACK	IH	PLR	LE	LA	M	R	1	-	3	4	5	-	7	-	9	-	11	-	-	-	-	16	17	18	19		-	-	SALEABLE	
									20	21	22	23	24	25	-	27	-	-	30	-	32	-	34	35	36	37	38		-	-		
									-	-	-	-	-	44	45	-	-	-	-	-	-	52	53	-	55	56	-					
									-	-	-	-	-	-	-	-	-	-	-	-	-	-	-	73	74	75	-		-	-		
									77	78	79	80	81	82	83	84	85	86	87	88	89	90	91	92	93	94	95		-	-		
GPEC RCPT CONN 103 CKT END LVR KEY 5/65	349938025	5-BLACK	IH	PLR	LE	LA	M	R	1	2	3	4	-	-	-	-	-	-	11	-	-	-	-	-	-	-	19		-	-	SALEABLE	
									-	-	22	-	24	-	26	-	-	29	-	-	32	-	-	35	36	-	38		-	-		
									-	-	-	-	43	-	-	-	-	-	-	-	-	-	53	-	55	56	57					
									-	-	60	-	-	-	-	-	-	-	-	-	-	-	-	73	74	75	-		-	-		
									77	78	-	-	-	82	83	84	85	86	87	88	89	90	-	92	93	94	95		-	-		
GPEC RCPT CONN 103 CKT END LVR KEY 5/64	349938026	5-BLACK	IH	PLR	LE	LA	M	R	1	2	3	-	-	-	-	-	-	-	-	-	-	-	-	16	-	-	19		-	-	SALEABLE	
									20	-	-	-	-	-	26	27	-	29	30	-	-	-	-	35	36	-	38		-	-		
									-	40	-	-	-	-	-	-	47	-	-	-	-	-	53	-	55	56	57					
									-	-	60	-	-	-	-	-	-	-	-	-	-	-	-	73	74	75	-		-	-		
									77	78	-	-	81	82	83	84	85	86	87	88	89	90	-	92	93	94	95		-	-		

molex

GPEC IV 103 WAY RECEPTACLE SEALED ASSEMBLY MAT SEAL

BOM AND PIN OUT SHEET

ASSEMBLY DESCRIPTION	ASSEMBLY PART NUMBER	COMPONENT THE PRESENCE OF AN ABBREVIATION INDICATES THE PRESENCE OF THAT COMPONENT.							BLOCKED TERMINALS CAVITY WITH A NUMBER INDICATES BLOCKED TERMINAL POSITION CAVITY WITHOUT A NUMBER INDICATES OPEN TERMINAL POSITION																				STATUS	COMMENTS
		OUTER HOUSING KEY/COLOR	INNER HOUSING	PLR	LEVER	LEVER ARM (x/2)	MAT SEAL	RING SEAL																					
GPEC RCPT CONN 103 CKT END LVR KEY 5/66	349938027	5-BLACK	IH	PLR	LE	LA	M	R	1	2	3	-	-	-	-	-	-	-	-	-	-	-	16	17	-	-		-	-	SALEABLE	
									20	21	-	-	-	-	26	27	-	-	-	-	-	-	34	35	36	-	38	-	-		
									-	-	-	-	-	-	-	-	47	-	-	-	-	52	53	54	-	-	57				
									-	-	-	-	-	-	-	-	-	-	-	-	-	-	-	-	74	75	-	-	-		
									77	78	79	80	81	82	83	84	85	86	87	88	89	-	-	92	93	94	95	-	-		
GPEC RCPT CONN 103 CKT END LVR KEY 5/45	349938028	5-BLACK	IH	PLR	LE	LA	M	R	1	2	3	4	5	-	7	-	9	-	11	-	-	-	-	16	17	18	-	-	-	SALEABLE	
									20	21	22	23	24	25	26	27	-	-	-	-	32	-	34	35	36	37	38	-	-		
									-	-	-	-	-	44	45	-	47	-	-	-	-	52	53	54	-	-	57				
									-	-	-	-	-	-	-	-	-	-	68	69	70	71	72	-	74	75	76	-	-		
									77	78	79	80	81	82	83	84	85	86	87	88	89	-	91	92	93	94	95	-	-		
GPEC RCPT CONN 103 CKT END LVR KEY 5/68	349938029	5-BLACK	IH	PLR	LE	LA	M	R	1	-	3	-	-	-	-	-	-	-	-	-	-	-	-	16	17	-	-	-	-	SALEABLE	
									20	21	-	-	-	-	26	27	-	-	-	-	-	-	34	35	36	-	38	-	-		
									-	-	-	-	-	-	-	-	47	-	-	-	-	52	53	54	-	-	-				
									-	-	-	-	-	-	-	-	-	-	-	-	-	-	-	-	74	75	-	-	-		
									77	78	79	80	81	82	83	84	85	86	87	88	89	-	-	92	93	94	95	-	-		
GPEC RCPT CONN 103 CKT END LVR KEY 5/47	349938030	5-BLACK	IH	PLR	LE	LA	M	R	1	-	-	-	-	6	-	-	9	-	11	12	-	-	15	16	-	-	-	-	-	SALEABLE	
									20	-	-	-	-	25	26	27	-	29	30	31	32	33	-	-	36	37	-	98	-		
									39	-	-	42	43	44	45	-	-	48	49	50	51	-	-	54	55	-	57				
									58	-	60	61	62	63	64	-	-	67	68	69	-	71	72	-	74	75	76	-	-		
									77	-	-	80	81	82	83	-	85	-	-	88	-	90	91	-	-	94	95	-	-		
GPEC RCPT CONN 103 CKT END LVR KEY 5/55	349938031	5-BLACK	IH	PLR	LE	LA	M	R	1	2	3	4	5	-	7	-	-	-	-	-	-	-	-	16	-	-	19	-	-	SALEABLE	
									20	-	22	23	24	-	-	27	-	-	30	-	32	-	-	35	-	37	38	-	-		
									-	-	-	-	43	44	45	-	47	-	-	-	-	52	53	-	55	56	57				
									-	-	-	-	-	-	-	-	-	-	-	-	-	-	-	73	74	75	-	-	-		
									77	78	79	80	81	82	83	84	85	86	87	88	89	90	-	92	93	94	95	-	-		
GPEC RCPT CONN 103 CKT END LVR KEY 5/62	349938032	5-BLACK	IH	PLR	LE	LA	M	R	1	-	-	-	5	-	-	-	-	-	-	-	-	-	-	16	-	-	19	-	-	SALEABLE	
									20	-	22	23	24	-	-	-	-	-	30	-	32	-	-	35	-	37	38	-	-		
									-	-	-	-	-	44	45	-	-	-	-	-	-	52	53	-	55	56	57				
									-	-	-	-	-	-	-	-	-	-	-	-	-	-	-	73	74	75	-	-	-		
									77	78	79	80	81	82	83	84	85	86	87	88	89	90	91	92	-	94	95	-	-		
GPEC RCPT CONN 103 CKT END LVR KEY 5/60	349938033	5-BLACK	IH	PLR	LE	LA	M	R	1	2	3	-	5	-	-	-	-	-	-	-	-	-	-	16	-	-	19	-	-	SALEABLE	
									20	-	22	23	24	-	-	-	-	-	30	-	32	-	-	35	-	37	38	-	-		
									-	-	-	-	-	44	45	-	-	-	-	-	-	52	53	-	55	56	57				
									-	-	-	-	-	-	-	-	-	-	-	-	-	-	-	73	74	75	-	-	-		
									77	78	79	80	81	82	83	84	85	86	87	88	89	90	91	92	-	94	95	-	-		
GPEC RCPT CONN 103 CKT END LVR KEY 5/56	349938034	5-BLACK	IH	PLR	LE	LA	M	R	-	-	-	-	-	6	-	8	9	10	11	12	13	-	-	-	-	-	-	96	-	SALEABLE	
									-	-	-	-	-	-	-	-	-	-	-	31	-	-	-	35	-	-	-	98	-		
									39	-	41	42	43	44	45	46	47	48	-	-	-	-	-	-	-	-	57				
									58	59	60	-	62	63	64	65	-	67	68	-	-	-	72	73	74	-	-	-	-		
									77	78	79	80	81	82	83	84	85	86	87	-	-	90	-	-	93	-	-	-	-		
GPEC RCPT CONN 103 CKT END LVR KEY 5/76	349938035	5-BLACK	IH	PLR	LE	LA	M	R	-	-	3	4	-	-	-	-	-	-	-	-	-	-	-	-	-	-	19	-	-	SALEABLE	
									-	-	-	-	-	-	26	-	-	-	-	-	-	-	-	-	-	37	38	-	-		
									-	-	-	-	43	-	-	-	-	-	-	50	-	52	53	-	-	-	-				
									-	-	-	-	-	-	-	-	-	-	-	-	-	-	-	73	-	-	-	-	-		
									77	78	79	80	81	82	83	84	-	86	87	88	89	90	91	-	93	94	-	-	-		
GPEC RCPT CONN 103 CKT END LVR KEY 5/75	349938036	5-BLACK	IH	PLR	LE	LA	M	R	-	-	3	4	-	-	7	-	-	-	-	-	-	-	-	-	-	-	19	-	-	SALEABLE	
									-	-	-	-	-	-	26	-	-	-	-	-	32	-	-	-	-	37	38	-	-		
									-	-	-	-	43	-	-	-	-	-	-	50	-	52	-	-	-	-	-				
									-	-	-	-	-	-	-	-	-	-	-	-	-	-	-	73	-	-	-	-	-		
									77	78	79	80	81	82	83	84	-	86	87	88	89	90	91	-	93	94	-	-	-		

molex

GPEC IV 103 WAY RECEPTACLE SEALED ASSEMBLY MAT SEAL

BOM AND PIN OUT SHEET

ASSEMBLY DESCRIPTION	ASSEMBLY PART NUMBER	COMPONENT THE PRESENCE OF AN ABBREVIATION INDICATES THE PRESENCE OF THAT COMPONENT.							BLOCKED TERMINALS CAVITY WITH A NUMBER INDICATES BLOCKED TERMINAL POSITION CAVITY WITHOUT A NUMBER INDICATES OPEN TERMINAL POSITION																				STATUS	COMMENTS
		OUTER HOUSING KEY/COLOR	INNER HOUSING	PLR	LEVER	LEVER ARM (x/2)	MAT SEAL	RING SEAL																					
GPEC RCPT CONN 103 CKT END LVR KEY 5/70	349938037	5-BLACK	IH	PLR	LE	LA	M	R	-	-	3	4	-	-	7	-	-	-	-	-	-	-	-	17	18	19		-	-	SALEABLE	
									-	-	22	-	-	-	26	-	-	-	-	-	32	33	34	-	-	37	38	-	-		
									-	-	-	-	43	-	-	-	-	-	-	50	-	52	-	-	-	-	-				
									-	-	-	-	-	-	-	-	-	-	-	-	-	-	72	73	-	-	-	-	-		
									77	78	79	80	81	82	83	84	-	86	87	88	89	90	91	-	93	-	-	-	-		
GPEC RCPT CONN 103 CKT END LVR KEY 5/62	349938038	5-BLACK	IH	PLR	LE	LA	M	R	1	-	3	-	5	-	-	-	-	-	-	-	-	-	-	16	-	-	19	-	-	SALEABLE	
									20	-	22	23	24	-	-	-	-	-	30	-	32	-	-	35	-	37	38	-	-		
									-	-	-	-	-	44	45	-	-	-	-	-	-	52	53	-	55	56	-				
									-	-	-	-	-	-	-	-	-	-	-	-	-	-	-	73	74	75	-	-	-		
									77	78	79	80	81	82	83	84	85	86	87	88	89	90	91	92	-	94	95	-	-		
GPEC RCPT CONN 103 CKT END LVR KEY 5/74	349938039	5-BLACK	IH	PLR	LE	LA	M	R	-	-	3	4	-	-	7	-	-	-	-	-	-	-	-	-	-	-	19	-	-	SALEABLE	
									-	-	-	-	-	-	26	-	-	-	-	-	32	-	-	-	-	37	38	-	-		
									-	-	-	-	43	-	-	-	-	-	-	50	-	52	-	-	-	-	-				
									-	-	-	-	-	-	-	-	-	-	-	-	70	71	-	73	-	-	-	-	-		
									77	78	79	80	81	82	83	84	-	86	87	88	89	90	91	-	93	-	-	-	-		
GPEC RCPT CONN 103 CKT END LVR KEY 5/57	349938040	5-BLACK	IH	PLR	LE	LA	M	R	-	-	-	4	5	6	-	-	9	10	-	12	13	-	-	-	-	-	-	96	-	SALEABLE	
									-	21	-	-	-	-	26	-	28	-	30	31	-	-	-	35	-	-	-	98	-		
									39	40	41	42	43	44	45	46	47	48	-	-	-	-	-	-	-	-	57				
									58	59	60	61	62	63	64	65	66	67	68	-	-	71	72	73	74	-	-	100	-		
									77	78	-	-	-	-	-	-	-	-	-	-	-	90	-	-	-	-	-	102	-		
GPEC RCPT CONN 103 CKT END LVR KEY 5/49	349938041	5-BLACK	IH	PLR	LE	LA	M	R	1	-	3	4	5	-	7	-	-	10	11	12	-	-	-	-	17	18	19	-	-	SALEABLE	
									20	-	22	-	24	-	26	27	-	-	-	-	32	33	34	35	36	37	38	-	-		
									-	-	-	-	43	-	-	-	-	-	-	50	-	52	-	54	-	56	57				
									-	-	-	-	-	-	-	-	-	-	-	-	70	71	72	73	74	75	-	-	-		
									77	78	79	80	81	82	83	84	85	86	87	88	89	90	91	92	93	94	95	-	-		
GPEC RCPT CONN 103 CKT END LVR KEY 5/61	349938042	5-BLACK	IH	PLR	LE	LA	M	R	-	-	3	4	-	-	7	-	-	10	11	12	-	-	-	-	17	18	19	-	-	SALEABLE	
									-	-	22	-	-	-	26	-	-	-	-	-	32	33	34	35	36	37	38	-	-		
									-	-	-	-	43	-	-	-	-	-	-	50	-	52	-	-	-	-	-				
									-	-	-	-	-	-	-	-	-	-	-	-	70	71	72	73	-	-	-	-	-		
									77	78	79	80	81	82	83	84	-	86	87	88	89	90	91	92	93	94	-	-	-		
GPEC RCPT CONN 103 CKT END LVR KEY 5/55	349938043	5-BLACK	IH	PLR	LE	LA	M	R	1	2	3	-	-	-	-	-	-	-	11	12	-	-	-	16	17	18	19	-	-	SALEABLE	
									20	-	-	-	-	-	26	27	-	29	30	-	-	-	34	35	36	37	38	-	-		
									-	-	-	-	43	-	-	-	47	-	-	-	-	52	53	-	55	56	57				
									-	-	-	-	-	-	-	-	-	-	-	-	-	-	-	73	74	75	76	-	-		
									77	78	79	80	81	82	83	84	85	86	87	88	89	90	-	92	93	94	95	-	-		
GPEC RCPT CONN 103 CKT END LVR KEY 5/76	349938044	5-BLACK	IH	PLR	LE	LA	M	R	-	-	3	4	-	-	7	-	-	-	-	-	-	-	-	-	-	-	-	-	-	SALEABLE	
									-	-	-	-	-	-	-	-	-	-	-	-	-	-	-	-	-	37	38	-	-		
									-	-	-	-	43	-	-	-	-	-	-	50	-	-	-	-	-	56	-				
									58	-	-	-	-	-	-	-	-	-	-	-	-	-	72	73	-	75	-	-	-		
									77	78	-	-	81	82	83	84	85	86	87	88	89	90	-	-	93	94	95	-	-		
GPEC RCPT CONN 103 CKT END LVR KEY 5/61	349938045	5-BLACK	IH	PLR	LE	LA	M	R	-	-	3	4	-	-	7	-	-	-	-	12	-	-	-	-	17	18	-	-	-	SALEABLE	
									-	21	22	23	-	-	26	-	-	-	-	-	32	33	34	-	36	37	38	-	-		
									-	-	-	-	43	-	-	-	-	-	-	50	-	-	-	-	-	-	-				
									-	-	60	-	-	-	-	-	-	-	-	-	70	71	72	73	74	-	-	-	-		
									77	78	79	80	81	82	83	84	85	86	87	88	89	90	-	92	93	94	95	-	-		
GPEC RCPT CONN 103 CKT END LVR KEY 5/49	349938046	5-BLACK	IH	PLR	LE	LA	M	R	1	2	-	4	5	-	7	-	9	-	11	-	-	-	-	16	17	18	19	-	-	SALEABLE	
									20	21	22	23	24	25	-	27	-	-	30	-	32	-	34	35	36	37	38	-	-		
									-	-	-	-	-	44	45	-	-	-	-	-	-	52	53	-	55	56	57				
									-	-	-	-	-	-	-	-	-	-	-	-	-	-	-	73	74	75	-	-	-		
									77	78	79	80	81	82	83	84	85	86	87	88	89	90	91	92	93	94	95	-	-		

molex

GPEC IV 103 WAY RECEPTACLE SEALED ASSEMBLY MAT SEAL

BOM AND PIN OUT SHEET

ASSEMBLY DESCRIPTION	ASSEMBLY PART NUMBER	COMPONENT THE PRESENCE OF AN ABBREVIATION INDICATES THE PRESENCE OF THAT COMPONENT.							BLOCKED TERMINALS CAVITY WITH A NUMBER INDICATES BLOCKED TERMINAL POSITION CAVITY WITHOUT A NUMBER INDICATES OPEN TERMINAL POSITION																					STATUS	COMMENTS
		OUTER HOUSING KEY/COLOR	INNER HOUSING	PLR	LEVER	LEVER ARM (x/2)	MAT SEAL	RING SEAL																						
GPEC RCPT CONN 103 CKT END LVR KEY 5/51	349938047	5-BLACK	IH	PLR	LE	LA	M	R	1	-	-	4	5	-	7	-	9	-	11	-	-	-	-	16	17	18	19		-	-	SALEABLE	
									20	21	22	23	24	25	-	27	-	-	30	-	32	-	34	35	36	37	38		-	-		
									-	-	-	-	-	44	45	-	-	-	-	-	-	52	53	-	55	56	-					
									-	-	-	-	-	-	-	-	-	-	-	-	-	-	-	73	74	75	-		-	-		
									77	78	79	80	81	82	83	84	85	86	87	88	89	90	91	92	93	94	95		-	-		
GPEC RCPT CONN 103 CKT END LVR KEY 5/54	349938048	5-BLACK	IH	PLR	LE	LA	M	R	1	-	3	4	5	-	7	-	-	-	-	-	-	-	-	16	-	-	-		-	-	SALEABLE	
									20	21	22	23	24	-	26	27	-	-	-	-	32	-	34	35	-	-	38		-	-		
									-	-	-	-	-	44	45	-	47	-	-	-	-	52	53	54	-	-	-					
									-	-	-	-	-	-	-	-	-	-	68	69	70	71	72	-	74	75	76		-	-		
									77	78	79	80	81	82	83	84	85	86	87	88	89	-	91	92	93	94	95		-	-		
GPEC RCPT CONN 103 CKT END LVR KEY 5/61	349938049	5-BLACK	IH	PLR	LE	LA	M	R	1	2	3	-	5	-	-	-	-	-	-	-	-	-	-	-	17	-	-		-	-	SALEABLE	
									20	-	-	23	24	-	-	27	-	-	-	-	-	33	-	35	36	37	38		-	-		
									-	-	-	-	43	-	-	-	-	-	-	-	-	-	-	54	-	56	57					
									-	-	60	-	-	-	-	-	-	-	-	-	70	71	72	73	74	75	-		-	-		
									77	78	79	80	81	82	83	84	85	86	87	88	89	90	-	-	93	94	95		-	-		
GPEC RCPT CONN 103 CKT END LVR KEY 5/64	349938050	5-BLACK	IH	PLR	LE	LA	M	R	-	2	3	-	-	-	-	-	-	-	-	-	-	-	-	-	-	-	19		-	-	SALEABLE	
									-	-	-	23	-	-	-	-	-	-	30	-	32	-	-	-	-	37	38		-	-		
									-	-	-	-	43	44	45	-	47	-	-	50	-	-	-	54	-	56	-					
									-	-	-	-	-	-	-	-	-	-	-	-	70	71	72	73	74	75	-		-	-		
									77	78	79	80	81	82	83	84	85	86	87	88	89	90	91	-	93	94	95		-	-		
GPEC RCPT CONN 103 CKT END LVR KEY 5/67	349938051	5-BLACK	IH	PLR	LE	LA	M	R	1	2	3	-	-	-	-	-	-	-	-	-	-	-	-	16	-	-	19		-	-	SALEABLE	
									20	-	-	-	-	-	26	27	-	29	30	-	-	-	-	35	36	-	38		-	-		
									-	-	-	-	-	-	-	-	47	-	-	-	-	-	53	-	55	56	57					
									-	-	-	-	-	-	-	-	-	-	-	-	-	-	-	73	74	75	-		-	-		
									77	78	-	-	-	82	83	84	85	86	87	88	89	90	-	92	93	94	95		-	-		
GPEC RCPT CONN 103 CKT END LVR KEY 5/56	349938052	5-BLACK	IH	PLR	LE	LA	M	R	1	2	3	-	-	-	-	-	-	-	11	12	-	-	-	16	17	18	19		-	-	SALEABLE	
									20	-	-	-	-	-	26	27	-	29	30	-	-	-	34	35	36	37	38		-	-		
									-	-	-	-	43	-	-	-	47	-	-	-	-	52	53	-	55	56	57					
									-	-	-	-	-	-	-	-	-	-	-	-	-	-	-	73	74	75	76		-	-		
									77	78	79	80	-	82	83	84	85	86	87	88	89	90	-	92	93	94	95		-	-		
GPEC RCPT CONN 103 CKT END LVR KEY 5/55	349938053	5-BLACK	IH	PLR	LE	LA	M	R	-	-	3	4	-	-	7	-	-	10	11	12	-	-	-	-	17	18	19		-	-	SALEABLE	
									-	-	22	-	-	-	26	-	-	-	-	-	32	33	34	35	36	37	38		-	-		
									-	-	-	-	43	44	45	-	-	48	49	50	-	52	-	-	-	-	-					
									-	-	-	-	-	-	-	-	66	67	-	-	70	71	72	73	-	-	-		-	-		
									77	78	79	80	81	82	83	84	-	86	87	88	89	90	91	92	93	94	-		-	-		
GPEC RCPT CONN 103 CKT END LVR KEY 5/69	349938054	5-BLACK	IH	PLR	LE	LA	M	R	-	-	3	4	-	-	7	-	-	-	-	-	-	-	-	-	-	-	19		-	-	SALEABLE	
									-	-	-	23	-	-	26	-	-	-	-	-	32	-	-	-	-	37	38		-	-		
									-	-	-	-	43	-	-	-	-	-	-	50	-	52	-	-	-	-	-					
									58	-	60	-	-	-	-	-	-	-	-	-	70	71	-	73	-	-	-		-	-		
									77	78	79	80	81	82	83	84	85	86	87	88	89	90	91	-	93	-	95		-	-		
GPEC RCPT CONN 103 CKT END LVR KEY 5/66	349938055	5-BLACK	IH	PLR	LE	LA	M	R	-	-	3	4	-	-	7	-	-	-	-	-	-	-	-	-	-	-	-		-	-	SALEABLE	
									-	-	-	23	-	-	26	-	-	-	30	-	-	-	-	35	-	37	38		-	-		
									-	-	-	-	43	44	45	-	-	-	-	50	-	-	-	-	-	56	-					
									58	-	-	-	-	-	-	-	-	-	-	-	70	71	72	73	-	75	-		-	-		
									77	78	79	80	81	82	83	84	85	86	87	88	89	90	-	-	93	94	95		-	-		
GPEC RCPT CONN 103 CKT END LVR KEY 5/58	349938056	5-BLACK	IH	PLR	LE	LA	M	R	-	2	-	4	-	-	7	-	-	-	11	-	-	-	-	-	-	-	19		-	-	SALEABLE	
									-	21	22	23	-	-	-	-	-	-	30	-	32	-	-	-	36	37	38		-	-		
									-	-	-	-	43	44	45	-	-	-	-	50	-	-	-	54	-	56	-					
									58	-	-	-	-	-	-	-	-	-	-	-	70	71	72	73	74	75	-		-	-		
									77	78	79	80	81	82	83	84	85	86	87	88	89	90	91	92	93	94	95		-	-		

molex

GPEC IV 103 WAY RECEPTACLE SEALED ASSEMBLY MAT SEAL

BOM AND PIN OUT SHEET

ASSEMBLY DESCRIPTION	ASSEMBLY PART NUMBER	COMPONENT THE PRESENCE OF AN ABBREVIATION INDICATES THE PRESENCE OF THAT COMPONENT.							BLOCKED TERMINALS CAVITY WITH A NUMBER INDICATES BLOCKED TERMINAL POSITION CAVITY WITHOUT A NUMBER INDICATES OPEN TERMINAL POSITION																						STATUS	COMMENTS
		OUTER HOUSING KEY/COLOR	INNER HOUSING	PLR	LEVER	LEVER ARM (x/2)	MAT SEAL	RING SEAL																							
GPEC RCPT CONN 103 CKT END LVR KEY 5/57	349938057	5-BLACK	IH	PLR	LE	LA	M	R	1	-	3	-	5	-	-	-	-	-	-	13	-	15	16	-	-	-		-	-	SALEABLE	
									20	-	-	-	24	-	26	27	-	29	-	31	32	-	-	35	-	37	38		-	-		
									-	-	-	-	43	-	-	-	-	-	-	50	51	-	53	54	55	56	57					
									-	-	60	-	-	-	-	-	-	-	-	-	70	71	72	73	74	75	-	-	-		
									77	78	-	-	81	82	83	84	85	86	87	88	89	90	-	-	93	94	95	-	-		
GPEC RCPT CONN 103 CKT END LVR KEY 5/75	349938058	5-BLACK	IH	PLR	LE	LA	M	R	-	-	3	4	-	-	7	-	-	-	-	-	-	-	-	-	-	-	-	-	-	SALEABLE	
									-	-	-	23	-	-	26	-	-	-	-	-	-	-	-	-	-	37	38	-	-		
									-	-	-	-	43	-	-	-	-	-	-	-	-	-	-	-	-	-	-					
									-	-	60	-	-	-	-	-	-	-	-	-	70	71	-	73	-	-	-	-	-		
									77	78	79	80	81	82	83	84	85	86	87	88	89	90	-	-	93	-	95	-	-		
GPEC RCPT CONN 103 CKT END LVR KEY 5/74	349938059	5-BLACK	IH	PLR	LE	LA	M	R	-	-	3	4	-	-	7	-	-	-	-	-	-	-	-	-	-	-	-	-	-	SALEABLE	
									-	-	-	23	-	-	26	-	-	-	-	-	-	-	-	-	-	37	38	-	-		
									-	-	-	-	43	-	-	-	-	-	-	50	-	-	-	-	-	-	-					
									-	-	60	-	-	-	-	-	-	-	-	-	70	71	-	73	-	-	-	-	-		
									77	78	79	80	81	82	83	84	85	86	87	88	89	90	-	-	93	-	95	-	-		
GPEC RCPT CONN 103 CKT END LVR KEY 5/53	349938060	5-BLACK	IH	PLR	LE	LA	M	R	1	-	3	-	5	-	-	-	-	-	11	-	13	-	15	16	-	-	-		-	-	SALEABLE	
									20	21	-	23	24	-	26	27	-	29	-	31	32	33	-	35	36	37	38		-	-		
									39	-	-	-	43	-	-	-	-	-	-	50	51	-	53	54	55	56	57					
									-	-	60	-	-	-	-	-	-	-	-	-	-	-	72	-	74	75	76		-	-		
									77	-	-	-	81	82	83	84	85	86	87	88	89	90	-	92	93	94	95		-	-		
GPEC RCPT CONN 103 CKT TOP LVR KEY N/103	349939000	NIL - GRAY	IH	PLR	LT	LA	M	R	-	-	-	-	-	-	-	-	-	-	-	-	-	-	-	-	-	-	-		-	-	NOT RECOMMENDED	
									-	-	-	-	-	-	-	-	-	-	-	-	-	-	-	-	-	-	-		-	-		
									-	-	-	-	-	-	-	-	-	-	-	-	-	-	-	-	-	-	-					
									-	-	-	-	-	-	-	-	-	-	-	-	-	-	-	-	-	-	-		-	-		
									-	-	-	-	-	-	-	-	-	-	-	-	-	-	-	-	-	-	-		-	-		
GPEC RCPT CONN 103 CKT TOP LVR KEY 5/103	349939001	5-BLACK	IH	PLR	LT	LA	M	R	-	-	-	-	-	-	-	-	-	-	-	-	-	-	-	-	-	-	-		-	-	SALEABLE	
									-	-	-	-	-	-	-	-	-	-	-	-	-	-	-	-	-	-	-		-	-		
									-	-	-	-	-	-	-	-	-	-	-	-	-	-	-	-	-	-	-					
									-	-	-	-	-	-	-	-	-	-	-	-	-	-	-	-	-	-	-		-	-		
									-	-	-	-	-	-	-	-	-	-	-	-	-	-	-	-	-	-	-		-	-		
GPEC RCPT CONN 103 CKT TOP LVR KEY 5/57	349939002	5-BLACK	IH	PLR	LT	LA	M	R	-	-	-	4	5	6	7	8	9	10	11	-	13	-	-	-	-	-	-		96	-	SALEABLE	
									-	-	-	-	-	-	26	-	28	-	30	31	-	-	-	35	-	-	-		98	-		
									39	40	-	-	43	44	45	46	47	48	-	-	-	-	-	-	-	-	57					
									58	-	60	61	62	63	64	65	66	-	68	69	-	71	72	73	74	75	-		100	-		
									77	78	-	-	-	-	-	-	-	-	-	-	-	90	91	-	-	-	-		102	-		
GPEC RCPT CONN 103 CKT TOP LVR KEY 5/55	349939003	5-BLACK	IH	PLR	LT	LA	M	R	-	-	-	4	5	6	7	8	9	10	11	12	13	-	-	-	-	-	-		96	-	SALEABLE	
									-	21	-	-	-	-	26	-	28	-	30	31	-	-	-	35	-	-	-		98	-		
									39	40	-	-	43	44	45	46	47	48	-	-	-	-	-	-	-	-	57					
									58	-	60	61	62	63	64	65	66	-	68	69	-	71	72	73	74	-	76		100	-		
									77	78	-	-	-	-	-	-	-	-	-	-	-	90	91	-	-	-	-		102	-		
GPEC RCPT CONN 103 CKT TOP LVR KEY 5/47	349939004	5-BLACK	IH	PLR	LT	LA	M	R	-	-	-	4	5	6	7	8	9	10	11	12	13	-	-	-	-	-	-		96	-	SALEABLE	
									20	21	-	-	-	-	26	-	28	-	30	31	-	-	-	35	-	-	-		98	-		
									39	40	-	-	43	44	45	46	47	48	-	-	-	-	-	-	55	56	57					
									58	59	60	61	62	63	64	65	66	-	68	-	-	71	72	73	74	75	-		100	-		
									77	78	79	-	-	-	-	-	-	86	87	88	-	-	91	-	93	-	95		102	-		
GPEC RCPT CONN 103 CKT TOP LVR KEY 5/48	349939005	5-BLACK	IH	PLR	LT	LA	M	R	-	-	-	4	5	6	7	8	9	10	11	12	13	-	-	-	-	-	-		96	-	SALEABLE	
									20	21	-	-	-	-	26	-	28	-	30	31	-	-	-	35	-	-	-		98	-		
									39	40	-	-	43	44	45	46	47	48	-	-	-	-	-	-	55	56	57					
									58	-	60	61	62	63	64	65	66	-	68	-	-	71	72	73	74	75	-		100	-		
									77	78	79	-	-	-	-	-	-	86	87	88	-	-	91	-	93	-	95		102	-		

molex

GPEC IV 103 WAY RECEPTACLE SEALED ASSEMBLY MAT SEAL

BOM AND PIN OUT SHEET

ASSEMBLY DESCRIPTION	ASSEMBLY PART NUMBER	COMPONENT THE PRESENCE OF AN ABBREVIATION INDICATES THE PRESENCE OF THAT COMPONENT.							BLOCKED TERMINALS CAVITY WITH A NUMBER INDICATES BLOCKED TERMINAL POSITION CAVITY WITHOUT A NUMBER INDICATES OPEN TERMINAL POSITION																						STATUS	COMMENTS
		OUTER HOUSING KEY/COLOR	INNER HOUSING	PLR	LEVER	LEVER ARM (x/2)	MAT SEAL	RING SEAL																							
GPEC RCPT CONN 103 CKT TOP LVR KEY 5/55	349939006	5-BLACK	IH	PLR	LT	LA	M	R	-	-	-	4	5	6	7	8	9	10	11	12	13	-	-	-	-	-	-	96	-	SALEABLE	
									-	21	-	-	-	-	26	-	28	-	30	31	-	-	-	35	-	-	-	98	-		
									39	40	-	-	43	44	45	46	47	48	-	-	-	-	-	-	-	-	57				
									58	-	60	61	62	63	64	65	66	-	68	69	-	71	72	73	74	75	-	100	-		
									77	78	-	-	-	-	-	-	-	-	-	-	-	90	91	-	-	-	-	102	-		
GPEC RCPT CONN 103 CKT TOP LVR KEY 5/56	349939007	5-BLACK	IH	PLR	LT	LA	M	R	-	-	-	4	5	6	7	8	9	10	11	12	13	-	-	-	-	-	-	96	-	SALEABLE	
									-	21	-	-	-	-	26	-	28	-	30	31	-	-	-	35	-	-	-	98	-		
									39	40	-	-	43	44	45	46	47	48	-	-	-	-	-	-	-	-	57				
									58	-	60	61	62	63	64	65	-	-	68	69	-	71	72	73	74	75	-	100	-		
									77	78	-	-	-	-	-	-	-	-	-	-	-	90	91	-	-	-	-	102	-		
GPEC RCPT CONN 103 CKT TOP LVR KEY 5/49	349939008	5-BLACK	IH	PLR	LT	LA	M	R	-	-	-	4	5	6	7	8	9	10	11	12	13	-	-	-	-	-	-	96	-	SALEABLE	
									20	21	-	-	-	-	26	-	28	-	30	31	-	-	-	35	-	-	-	98	-		
									39	40	-	-	43	44	45	46	47	48	-	-	-	-	-	-	55	56	57				
									58	-	60	61	62	63	64	65	-	-	68	-	-	71	72	73	74	75	-	100	-		
									77	78	79	-	-	-	-	-	-	86	87	88	-	-	91	-	93	-	95	102	-		
GPEC RCPT CONN 103 CKT TOP LVR KEY 5/58	349939009	5-BLACK	IH	PLR	LT	LA	M	R	-	-	-	4	5	6	7	8	9	10	11	-	13	-	-	-	-	-	-	96	-	SALEABLE	
									-	-	-	-	-	-	26	-	28	-	30	31	-	-	-	35	-	-	-	98	-		
									39	40	-	-	43	44	45	46	47	48	-	-	-	-	-	-	-	-	57				
									58	-	60	61	62	63	64	65	-	-	68	69	-	71	72	73	74	75	-	100	-		
									77	78	-	-	-	-	-	-	-	-	-	-	-	90	91	-	-	-	-	102	-		
GPEC RCPT CONN 103 CKT TOP LVR KEY 5/103	349939010	5-BLACK	IH	PLR	LT	LA	M	R	-	-	-	-	-	-	-	-	-	-	-	-	-	-	-	-	-	-	-	-	-	SALEABLE	
									-	-	-	-	-	-	-	-	-	-	-	-	-	-	-	-	-	-	-	-	-		
									-	-	-	-	-	-	-	-	-	-	-	-	-	-	-	-	-	-	-				
									-	-	-	-	-	-	-	-	-	-	-	-	-	-	-	-	-	-	-	-	-		
									-	-	-	-	-	-	-	-	-	-	-	-	-	-	-	-	-	-	-	-	-		
GPEC RCPT CONN 103 CKT TOP LVR KEY 5/49	349939011	5-BLACK	IH	PLR	LT	LA	M	R	-	-	-	4	5	6	7	8	9	10	11	12	13	-	-	-	-	-	-	96	-	SALEABLE	
									-	21	-	23	-	-	26	-	28	-	-	31	-	-	-	35	-	-	-	98	-		
									39	40	-	-	43	44	45	46	47	48	-	-	-	-	-	-	-	-	57				
									58	59	60	61	62	63	64	65	-	-	68	69	-	71	-	73	74	-	-	100	-		
									77	78	-	80	81	82	83	84	85	-	87	88	-	90	91	-	-	-	-	102	-		
GPEC RCPT CONN 103 CKT TOP LVR KEY 5/40	349939012	5-BLACK	IH	PLR	LT	LA	M	R	1	2	3	4	5	6	-	-	9	-	11	12	-	-	15	16	-	-	19	96	-	SALEABLE	
									20	21	-	-	-	25	26	27	-	-	30	31	32	33	34	-	-	37	-	98	-		
									39	-	-	42	43	44	45	-	-	48	49	-	-	-	-	54	55	-	57				
									58	-	60	61	62	63	64	-	-	67	68	69	-	71	72	-	74	75	76	-	-		
									77	-	-	80	81	82	83	84	85	86	-	88	89	-	-	92	93	94	95	-	-		
GPEC RCPT CONN 103 CKT TOP LVR KEY 5/34	349939013	5-BLACK	IH	PLR	LT	LA	M	R	1	2	-	4	5	6	-	8	9	-	11	12	13	-	-	16	17	18	19	96	-	SALEABLE	
									20	21	22	23	-	25	26	27	28	-	30	31	32	33	-	-	36	37	38	-	-		
									39	-	-	42	-	44	45	46	-	48	49	50	51	-	-	54	55	-	57				
									58	-	60	61	62	63	64	-	-	67	68	69	-	71	-	-	74	75	76	-	-		
									77	-	79	80	81	82	83	84	85	86	-	-	89	-	-	92	93	94	95	-	-		
GPEC RCPT CONN 103 CKT TOP LVR KEY 5/52	349939014	5-BLACK	IH	PLR	LT	LA	M	R	-	2	3	-	-	-	-	-	-	-	-	12	13	-	15	16	-	18	19	-	-	SALEABLE	
									20	-	22	23	24	-	-	27	-	29	-	31	-	-	34	-	36	37	38	-	-		
									-	-	-	-	43	-	-	-	-	-	-	50	51	-	53	54	55	56	-				
									-	-	-	-	-	-	-	-	-	-	68	69	70	71	72	73	74	75	-	-	-		
									77	78	-	-	81	82	83	84	85	86	87	88	89	90	91	92	93	94	95	-	-		
GPEC RCPT CONN 103 CKT TOP LVR KEY 5/57	349939015	5-BLACK	IH	PLR	LT	LA	M	R	-	-	-	4	5	6	-	-	9	10	-	12	13	-	-	-	-	-	-	96	-	SALEABLE	
									-	21	-	-	-	-	26	-	28	-	30	31	-	-	-	35	-	-	-	98	-		
									39	40	41	42	43	44	45	46	47	48	-	-	-	-	-	-	-	-	57				
									58	59	60	61	62	63	64	65	66	67	68	-	-	71	72	73	74	-	-	100	-		
									77	78	-	-	-	-	-	-	-	-	-	-	-	90	-	-	-	-	-	102	-		

molex

GPEC IV 103 WAY RECEPTACLE SEALED ASSEMBLY MAT SEAL

BOM AND PIN OUT SHEET

ASSEMBLY DESCRIPTION	ASSEMBLY PART NUMBER	COMPONENT THE PRESENCE OF AN ABBREVIATION INDICATES THE PRESENCE OF THAT COMPONENT.							BLOCKED TERMINALS CAVITY WITH A NUMBER INDICATES BLOCKED TERMINAL POSITION CAVITY WITHOUT A NUMBER INDICATES OPEN TERMINAL POSITION																					STATUS	COMMENTS
		OUTER HOUSING KEY/COLOR	INNER HOUSING	PLR	LEVER	LEVER ARM (x/2)	MAT SEAL	RING SEAL																						
GPEC RCPT CONN 103 CKT TOP LVR KEY 5/0	349939016	5-BLACK	IH	PLR	LT	LA	M	R	1	2	3	4	5	6	7	8	9	10	11	12	13	14	15	16	17	18	19		96	97	SALEABLE	
									20	21	22	23	24	25	26	27	28	29	30	31	32	33	34	35	36	37	38		98	99		
									39	40	41	42	43	44	45	46	47	48	49	50	51	52	53	54	55	56	57					
									58	59	60	61	62	63	64	65	66	67	68	69	70	71	72	73	74	75	76		100	101		
									77	78	79	80	81	82	83	84	85	86	87	88	89	90	91	92	93	94	95		102	103		
GPEC RCPT CONN 103 CKT TOP LVR KEY 5/31	349939017	5-BLACK	IH	PLR	LT	LA	M	R	1	-	3	4	5	6	7	-	-	10	-	-	13	14	15	16	17	18	19		96	97	SALEABLE	
									-	-	22	-	24	25	26	27	28	29	30	31	32	33	-	35	-	37	38		-	-		
									39	40	-	-	43	-	-	-	47	48	49	50	-	52	53	54	55	-	57					
									58	59	60	61	62	-	64	-	-	-	-	69	70	71	-	73	74	75	76		100	101		
									77	78	-	80	81	82	83	-	85	-	87	88	89	90	-	-	93	94	95		102	-		
GPEC RCPT CONN 103 CKT TOP LVR KEY 5/32	349939018	5-BLACK	IH	PLR	LT	LA	M	R	1	-	3	4	5	6	7	-	-	10	-	-	13	14	15	16	17	18	19		-	97	SALEABLE	
									-	-	22	-	24	25	26	27	28	29	30	31	32	33	-	35	-	37	38		-	-		
									39	40	-	-	43	-	-	-	47	48	49	50	-	52	53	54	55	-	57					
									58	59	60	61	62	-	64	-	-	-	-	69	70	71	-	73	74	75	76		100	101		
									77	78	-	80	81	82	83	-	85	-	87	88	89	90	-	-	93	94	95		102	-		
GPEC RCPT CONN 103 CKT TOP LVR KEY 5/33	349939019	5-BLACK	IH	PLR	LT	LA	M	R	1	-	3	4	5	6	7	-	-	10	-	-	13	14	15	16	17	18	19		-	97	SALEABLE	
									-	-	22	-	24	25	26	27	28	29	30	31	32	33	-	35	-	37	38		-	-		
									39	40	-	-	43	-	-	-	47	48	49	50	-	52	53	54	55	-	-					
									58	59	60	61	62	-	64	-	-	-	-	69	70	71	-	73	74	75	76		100	101		
									77	78	-	80	81	82	83	-	85	-	87	88	89	90	-	-	93	94	95		102	-		
GPEC RCPT CONN 103 CKT TOP LVR KEY 5/31	349939020	5-BLACK	IH	PLR	LT	LA	M	R	1	-	3	4	5	6	-	-	9	10	11	12	13	-	-	16	17	18	-		96	-	SALEABLE	
									20	-	-	-	-	25	26	27	-	29	30	31	32	33	34	-	36	37	38		98	-		
									39	-	-	-	43	44	45	46	-	48	49	50	51	-	53	54	55	56	57					
									58	-	60	61	62	63	64	65	66	67	68	69	-	71	-	73	74	75	76		-	-		
									77	-	79	80	81	82	83	-	-	86	-	-	89	90	91	92	93	94	95		-	-		
GPEC RCPT CONN 103 CKT TOP LVR KEY 5/32	349939021	5-BLACK	IH	PLR	LT	LA	M	R	1	-	3	4	5	6	-	-	9	10	11	-	13	-	-	16	17	18	-		96	-	SALEABLE	
									20	-	-	-	-	25	26	27	-	29	30	31	32	33	34	-	36	37	38		98	-		
									39	-	-	-	43	44	45	46	-	48	49	50	51	-	53	54	55	56	57					
									58	-	60	61	62	63	64	65	66	67	68	69	-	71	-	73	74	75	76		-	-		
									77	-	79	80	81	82	83	-	-	86	-	-	89	90	91	92	93	94	95		-	-		