3500 SERIES/LOW THERMAL EMF REED RELAYS

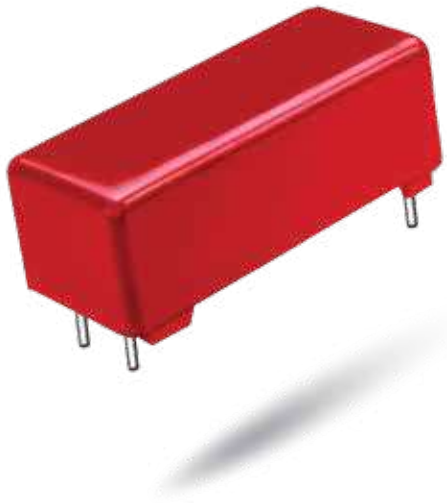

3500 Series Low Thermal EMF Reed Relays

The 3500 Series is ideally suited to the needs of Instrumentation, Data Acquisition and Process Control. The specification tables allow you to select the appropriate relay for your particular application. Recommended for use in high accuracy DVM's, Multiplexers and Digital or Analog Multipoint Recorders. If your requirements differ from the selection options, please consult Coto's Factory to discuss a custom reed relay.

3500 Series Features

- Low Thermal EMF: < 10 µV through < 0.5 µV with 50 nV stability
- Patented Low Thermal Design. U.S. Patent #4,084,142
- Low power coils to ensure low thermal EMF
- High Insulation Resistance - $10^{12}\Omega$
- Control/Signal isolation of 1500 VDC
- High reliability, hermetically sealed contacts
- Form A, Dry or Hg Wetted contacts. High Dielectric Strength
- Epoxy coated steel shell provides magnetic shielding
- RoHS compliant (except for 3520)

DIMENSIONS

in Inches (Millimeters)

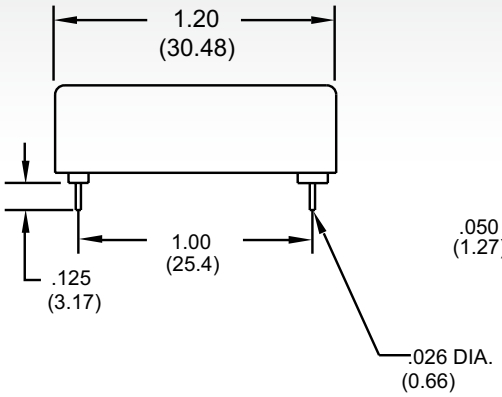

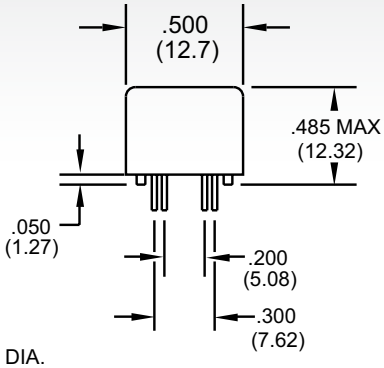

For Model
3501 & 3540

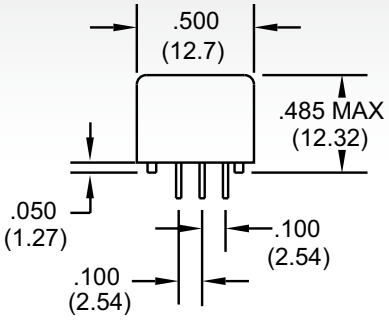

For Model
3502, 3520 & 3541



Bottom View

Ordering Information

Part Number XXXX-XX-X1X

Model Number
3501 3502 3520 3540 3541

Coil Voltage
05=5 volts
12=12 volts

Shielding Options[2]
1=Electrostatic Shield

Thermal EMF Rating
See available ratings in specification table.
1=<10µV Hg Wetted Only
9=<5µV Dry or Wetted
8=<3µV Dry Only
7=<1µV Dry Only
5=<0.5µV Dry Only

07082013

MODEL NUMBER			3501[2]	3502[2]	3520[2,3]	3540[2]	3541[2]
Parameters	**Test Conditions**	**Units**	**1 Form A**	**2 Form A**	**1 Form A** Hg Wetted	**1 Form A** High Voltage	**2 Form A** High Voltage
Thermal EMF Options	Measured after 5 minutes at nominal coil voltage (Refer to Reed Relay Technical Section for details)	µV	Individual <5µV <3µV <1µV <0.5µV	Differential <5µV <3µV <1µV <0.5µV	Differential <10µV <5µV - -	Individual <5µV <3µV - -	Differential <5µV <3µV - -
COIL SPECS.							
Nom. Coil Voltage		VDC	5 12	5 12	5 12	5 12	5 12
Coil Resistance	+/- 10%, 25° C	Ω	350 2000	350 2000	200 850	250 1500	250 1500
Operate Voltage	Must Operate by	VDC - Max.	3.8 9.0	3.8 9.0	3.8 9.0	3.8 9.0	3.8 9.0
Release Voltage	Must Release by	VDC - Min.	0.4 1.0	0.4 1.0	0.4 1.0	0.4 1.0	0.4 1.0
CONTACT RATINGS							
Switching Voltage	Max DC/Peak AC Resist.	Volts	200	200	500	500	500
Switching Current	Max DC/Peak AC Resist.	Amps	0.5	0.5	1.0	0.5	0.5
Carry Current	Max DC/Peak AC Resist.	Amps	1.5	1.5	2.0	2.0	2.0
Contact Rating	Max DC/Peak AC Resist.	Watts	10	10	28	10	10
Life Expectancy-Typical[1]	Signal Level 1.0V, 10mA	x 10^6 Ops.	500	100	1000	100	100
Static Contact Resistance (max. init.)	50mV, 10mA	Ω	0.200	0.100	0.050	0.200	0.100
Dynamic Contact Resistance (max. init.)	0.5V, 50mA at 100 Hz, 1.5 msec	Ω	0.300	0.200	0.100	0.300	0.200
RELAY SPECIFICATIONS							
Insulation Resistance (minimum)	Between all Isolated Pins at 100V, 25°C, 40% RH	Ω	10^{12}	10^{12}	10^{12}	10^{12}	10^{12}
Capacitance - Typical Across Open Contacts	No Shield Shield Guarding	pF pF	3.0 1.9	1.7 0.2	1.7 0.2	3.0 1.9	1.7 0.2
Dielectric Strength (minimum)	Between Contacts Contacts to Shield Contacts/Shield to Coil	VDC/peak AC VDC/peak AC VDC/peak AC	700 1000 1500	350 1000 1500	1000 1000 1500	1500 1000 1500	1500 1000 1500
Operate Time - including bounce - Typical	At Nominal Coil Voltage, 30 Hz Square Wave	msec.	0.75	0.75	2.0	1.0	1.0
Release Time - Typical		msec.	0.1	0.1	1.0	0.2	0.2

Top View[4]:
Dot stamped on top of relay refers to pin #1 location
Grid = .1"x.1" (2.54mm x 2.54mm)

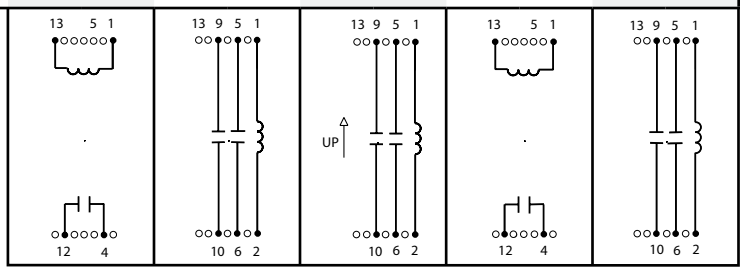

Notes:

[1] Consult factory for life expectancy at other switching loads.

[2] Models 3501 and 3540, optional electrostatic shield is tied to pin #5.
Models 3502, 3520 and 3541, optional electrostatic shield is tied to pin #13.

[3] Model 3520 has Hg wetted contacts - position sensitive, must be mounted within 30° of vertical plane. See schematic. Hg content per capsule: Form A, 0.04 grams.

Environmental Ratings:

Storage Temp: -35°C to +100°C; *Operating Temp:* -20°C to +85°C; *Solder Temp:* 270°C max; 10 sec. max
All electrical parameters measured at 25°C unless otherwise specified.
Vibration: 20 G's to 2000 Hz; *Shock:* 50 G's

07082013