MATERIAL NO.	ENGINEERING NO.	DESCRIPTION	MATERIAL	FINISH
380020166	1411	TERMINAL, FT, SLSL	BRASS	TIN OVER COPPER PLATED

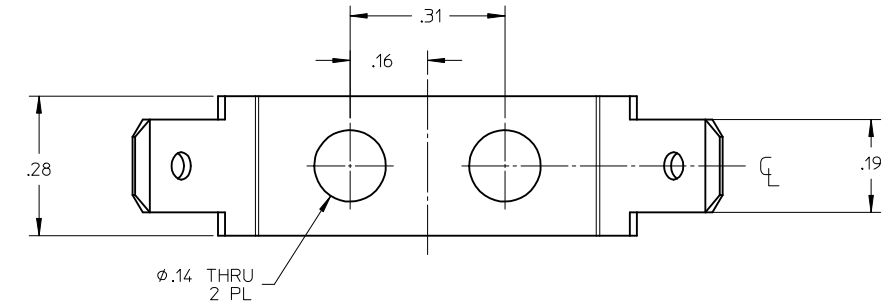

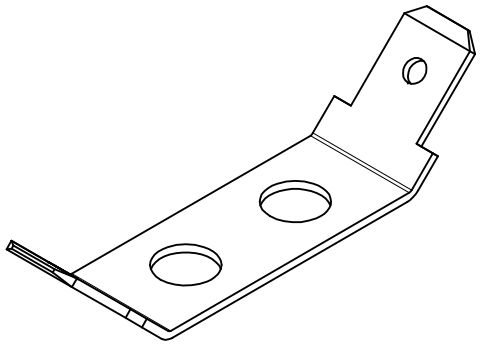

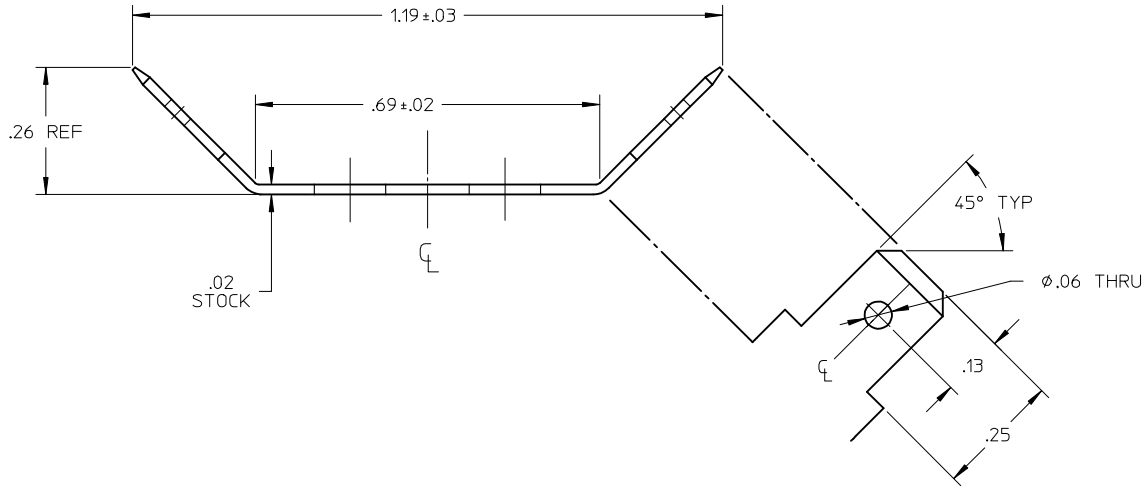

RELEASED
EC NO: IPG2016-0008 2015/06/30
DRWN:SVMURTHY 2015/06/30
CHKD:RSTONE
APPR:JFMURPHY 2016/07/11
DESCRIPTION
A
REV

QUALITY SYMBOLS
F_A=0
F_C=0
F_P=0

GENERAL TOLERANCES (UNLESS SPECIFIED)

	mm	INCH
4 PLACES	± ---	±
3 PLACES	±	± .005
2 PLACES	± 0.13	± .01
1 PLACE	± 0.3	± ---
0 PLACE	± ---	± ---

ANGULAR ± 2 °
DRAFT WHERE APPLICABLE MUST REMAIN WITHIN DIMENSIONS

DIMENSION STYLE: INCH ONLY
SCALE: 4:1
DESIGN UNITS: INCH
THIRD ANGLE PROJECTION

DRAWN BY	DATE
SVMURTHY	2015/06/30
CHECKED BY	DATE
RSTONE	2015/06/30
APPROVED BY	DATE
JFMURPHY	2016/07/11

TITLE: TERMINAL, FT, SLSL

molex

MATERIAL NO.: SEE CHART
DOCUMENT NO.: SD-38002-0166
SHEET NO.: 1 OF 1
SIZE: B

THIS DRAWING CONTAINS INFORMATION THAT IS PROPRIETARY TO MOLEX INCORPORATED AND SHOULD NOT BE USED WITHOUT WRITTEN PERMISSION