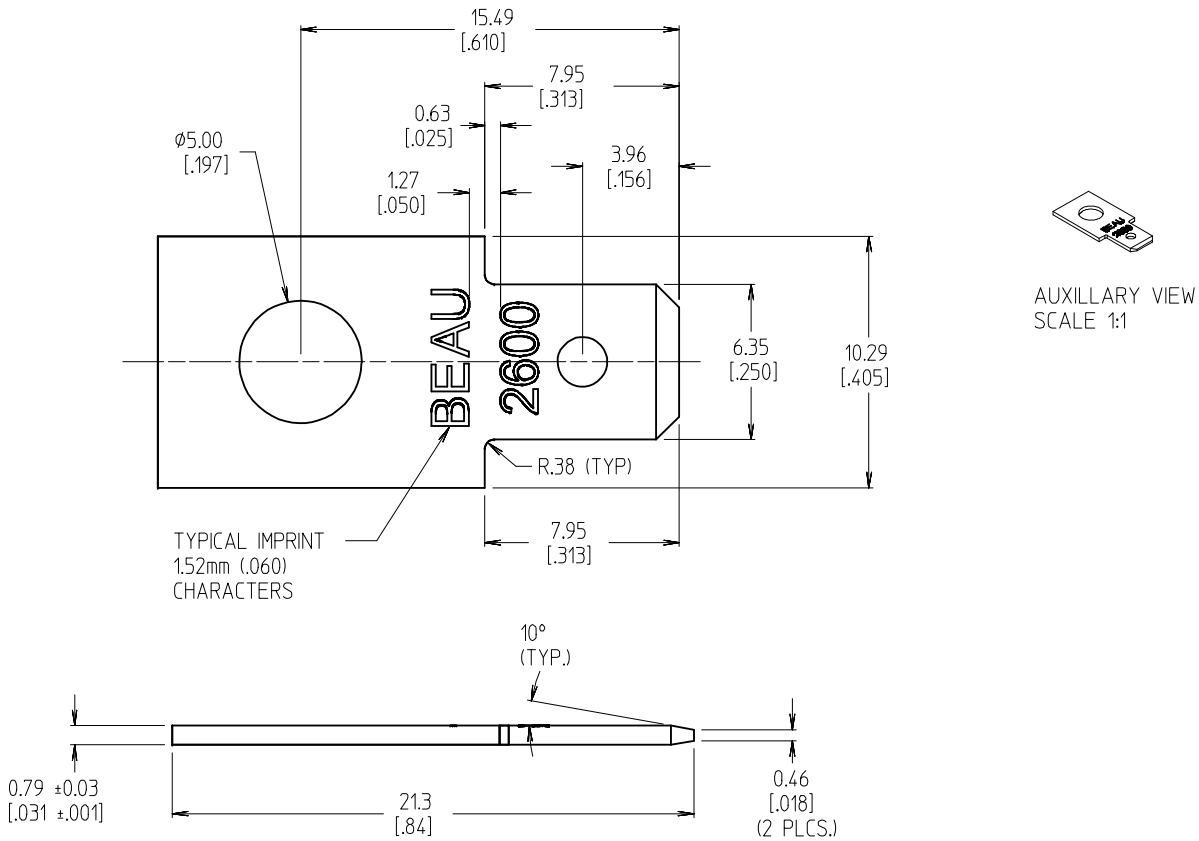

MATERIAL NO.	ENGINEERING NO.	DESCRIPTION	MATERIAL	FINISH
380020451	2613	TERMINAL, .250 FAST TAB, VFL	BRASS	TIN PLATED

NOTES:

1. ALL DIMENSIONS SHOWN BEFORE PLATING.
2. PART IS ROHS COMPLIANT.

INITIAL RELEASE
EC NO: WNA2009-0148
DRWN:JENCINAS 2008/09/01
CHKD:CYORK 2008/09/09
APPR:JMACNEIL 2008/09/10
REV A
DESCRIPTION

QUALITY SYMBOLS
▼=0
C=0

GENERAL TOLERANCES (UNLESS SPECIFIED)

	mm	INCH
4 PLACES	± ---	± ---
3 PLACES	± ---	± .005
2 PLACES	± 0.13	± .01
1 PLACE	± 0.3	± ---

ANGULAR ± 1 °

DRAFT WHERE APPLICABLE MUST REMAIN WITHIN DIMENSIONS

DIMENSION STYLE: MM/IN
SCALE: 5:1
DESIGN UNITS: INCH
THIRD ANGLE PROJECTION

DRAWN BY	D.E.G.	DATE 1983/11/21
CHECKED BY	R. NEFF	DATE 1983/11/21
APPROVED BY	R. NEFF	DATE 1983/11/21

TITLE: TERMINAL, .250 FT, VFL, CAT# 2613

MOLEX INCORPORATED

MATERIAL NO.: SEE CHART
DOCUMENT NO.: SD-38002-062
SHEET NO.: 1 OF 1
SIZE: B

THIS DRAWING CONTAINS INFORMATION THAT IS PROPRIETARY TO MOLEX INCORPORATED AND SHOULD NOT BE USED WITHOUT WRITTEN PERMISSION